CONTRACT DOCUMENTS AND SPECIFICATIONS

FOR

ROADWAY IMPROVEMENTS TO SERVE PROJECT DUMPLING ALONG MACMILLAN PARK DRIVE AND SC HIGHWAY 160

FOR

LANCASTER COUNTY

LANCASTER COUNTY, SOUTH CAROLINA

ALLIANCE CONSULTING ENGINEERS, INC.
PROJECT NO. 19128-0029
EDA INVESTMENT NO. 04-01-07416

MARCH 2020

BID DOCUMENTS

CONTRACTOR:

ADDRESS:

CONTRACTOR'S LICENSE NUMBER:

Alliance Consulting Engineers, Inc.
Post Office Box 8147
Columbia, SC 29202-8147
(803) 779-2078 ● (803) 779-2079 fax
www.allianceCE.com

CONTRACT DOCUMENTS AND SPECIFICATIONS

FOR

ROADWAY IMPROVEMENTS TO SERVE PROJECT DUMPLING ALONG MACMILLAN PARK DRIVE AND SC HIGHWAY 160

FOR

LANCASTER COUNTY
LANCASTER COUNTY, SOUTH CAROLINA

Prepared For:
Lancaster County
101 N. Main Street
Lancaster, South Carolina 29720

ALLIANCE
CONSULTING ENGINEERS

SOUTH CAROLINA REGISTERED PROFESSIONAL ENGINEER No. 35683 RYAN OHMER

Prepared By:
Alliance Consulting Engineers, Inc.
Post Office Box 8147
Columbia, South Carolina 29202-8147
Project No. 19128-0029

SOUTH CAROLINA CERTIFICATE OF AUTHORIZATION Alliance Consulting Engineers, Inc. No. C02854
4/8/20

SECTION 00 01 10

TABLE OF CONTENTS

Roadway Improvements to
Serve Project Dumpling along MacMillan
Park Drive and SC Highway 160
In unincorporated Lancaster County, South Carolina

FOR Lancaster County

PROJECT NO. 19128-0029
March 2020

DIVISION 00 – BIDDING AND CONTRACT REQUIREMENTS

00 01 01	Project Title and Seals Page
00 01 10	Table of Contents
00 01 15	Drawings Index
00 11 13	Advertisement for Bids
00 21 13	Instruction to Bidders
00 41 00	Bid Form
00 43 00	Bid Bond
00 43 93	Bidder's Submittal Checklist
00 45 13	Contractor/Subcontractor Qualifications
00 45 36	EEO Contract Compliance Notices
00 50 50	Notice of Intent to Award
00 51 02	Notice of Award
00 52 00	Contract
00 55 00	Notice to Proceed
00 61 13.13	Performance Bond
00 61 13.16	Payment Bond
00 62 76	Contractor's Application for Payment
00 63 36	Field Order
00 63 49	Work Change Directive
00 63 63	Change Order
00 65 16	Certificate of Substantial Completion
00 65 19.13	Contractor's Affidavit
00 70 00	General Conditions
	Supplement: Davis-Bacon Wage Rates
	Supplement: Lobbying Certification and Restriction Form (CD-512)
	Supplement: Requirements for Affirmative Action (EEO)
	Supplement: EDA Contracting Provisions for Construction Projects
	Supplement: EDA Construction Site Sign Specifications

DIVISION 01 – GENERAL REQUIREMENTS

01 06 00	Regulatory Requirements
01 23 00	Bid Alternates and Substitutes
01 30 00	Administrative Requirements
01 31 00	Construction Schedules
01 32 00	Project Construction Sequence and Provisions
01 40 00	Quality Requirements
01 41 26	Permits and Rights-of-Way
01 42 19	Reference Standards
01 45 29	Testing Laboratory Services

01 60 00 Product Requirements
01 70 00 Execution Requirements
01 71 23 Field Engineering
01 74 19 Waste Management
01 78 00 Closeout Submittals

DIVISION 02 – EXISTING CONDITIONS

02 32 00 Subsurface Evaluation
02 41 00 Demolition

DIVISION 03 – CONCRETE

03 10 00 Concrete Forming and Accessories
03 30 00 Cast-In-Place Concrete
03 40 00 Precast Concrete

DIVISION 31 – EARTHWORK

31 00 00 Earthwork
31 10 00 Site Preparation
31 11 00 Clearing and Grubbing
31 22 00 Grading
31 23 16 Excavation
31 23 16.13 Trenching for Site Utilities
31 23 23.13 Backfill and Compaction
31 25 00 Erosion and Sedimentation Controls

DIVISION 32 – EXTERIOR IMPROVEMENTS

32 11 23 Aggregate Base Course
32 13 13 Bituminous Concrete Paving
32 16 00 Curbs and Gutters
32 17 23 Pavement Markings
32 92 00 Turf and Grasses

DIVISION 33 – UTILITIES

33 41 00 Storm Utility Drainage Piping

END OF SECTION

SECTION 00 01 15

DRAWINGS INDEX

Roadway Improvements to Serve Project Dumpling along Macmillan Park Drive and SC Highway 160 in unincorporated Lancaster County, South Carolina (Project No. 19128-0029, DWG No. 01,1332-D23 dated June 2019 for all drawing sections)

TITLE	SHEET NO.
Cover Sheet	
Existing Conditions Plan – MacMillan Park Drive	C1.0
Existing Conditions Plan – SC Highway 160	C1.1
Clearing, Grubbing, and Demolition Plan – MacMillan Park Drive	C2.0
Clearing, Grubbing, and Demolition Plan – SC Highway 160	C2.1
Paving and Striping Plan – MacMillan Park Drive	C3.0
Paving and Striping Plan – SC Highway 160	C3.1
Proposed Roadway Plan and Profile – MacMillan Park Drive	C4.0
Proposed Roadway Plan and Profile – SC Highway 160	C4.1
Storm Drainage Profiles	C5.0
Roadway Cross Sections – MacMillan Park Drive (STA 0+00 TO 2+50)	C6.0
Roadway Cross Sections – MacMillan Park Drive (STA 3+00 TO 5+50)	C6.1
Roadway Cross Sections – MacMillan Park Drive (STA 6+00 TO 8+50)	C6.2
Roadway Cross Sections – MacMillan Park Drive (STA 9+00 TO 11+50)	C6.3
Roadway Cross Sections – MacMillan Park Drive (STA 12+00 TO 12+50)	C6.4
Roadway Cross Sections – SC Highway 160 (STA 0+00 TO 2+50)	C6.5
Roadway Cross Sections – SC Highway 160 (STA 3+00 TO 5+50)	C6.6
Phase I Erosion and Sediment Control Plan – MacMillan Park Drive	C7.0
Phase II Erosion and Sediment Control Plan – MacMillan Park Drive	C7.1
Phase III Erosion and Sediment Control Plan – MacMillan Park Drive	C8.0
Phase I Erosion and Sediment Control Plan – SC Highway 160	C8.1
Phase II Erosion and Sediment Control Plan – SC Highway 160	C9.0
Phase III Erosion and Sediment Control Plan – SC Highway 160	C9.1
Roadway Details (1 OF 3)	C10.0
Roadway Details (2 OF 3)	C10.1
Roadway Details (3 OF 3)	C10.2
Grading and Storm Drainage Details	C11.0
Erosion and Sediment Control Details (1 OF 3)	C12.0
Erosion and Sediment Control Details (2 OF 3)	C12.1
Erosion and Sediment Control Details (3 OF 3)	C12.2

END OF SECTION

SECTION 00 11 13

ADVERTISEMENT FOR BIDS

Owner: Lancaster County

Alliance Consulting Engineers, Inc. Project No.: 19128-0029

Separate sealed bids for construction of the **Roadway Improvements to Serve Project Dumpling along MacMillan Park Drive and SC Highway 160 in unincorporated Lancaster County, South Carolina** for Lancaster County will be received by Lancaster County, Owner's address until **2:00PM** on **Thursday June 18, 2020**, and then publicly opened and read aloud at said location. Oral statements may not be relied upon and will not be binding or legally effective. The deadline for submitting questions is **June 11, 2020.**

Sealed BIDS may be mailed to:

Lancaster County Procurement Department
Post Office Box 1809
Lancaster, South Carolina 29720

Or, Sealed BIDS may be hand delivered to:

Lancaster County Procurement Department
101 N. Main Street
Lancaster, South Carolina 29720

This project consists of providing all required materials, equipment and labor necessary to complete the construction of **Roadway Improvements to Serve Project Dumpling along MacMillan Park Drive and SC Highway 160 in unincorporated Lancaster County, South Carolina.** Generally, the project includes the construction of approximately 1,300 square yards (SY) of full depth asphalt, 3,500 SY of asphalt overlay, and 1,400 linear feet (LF) of concrete curb and gutter. Specific details are included within the Construction Plans and Technical Specifications.

The Instructions to Bidders, Bid Form, Contract, Plans, Specifications, Bid Bond, Performance Bond, Payment Bond and other Contract Documents may be examined at the following locations:

Lancaster County Procurement Department
101 N. Main Street
Lancaster, South Carolina 29720

HCAC and iSqFt Planroom Partnership: hcacarolinas@isqft.com
Dodge Plan Rooms: Dodge.Docs@construction.com

Engineers: Alliance Consulting Engineers, Inc., Post Office Box 8147, Columbia, SC 29202-8147

Drawings, Specifications, and Contract Documents may be obtained from the office of Alliance Consulting Engineers, Inc., Post Office Box 8147, Columbia, South Carolina 29202-8147 upon a non-refundable payment of **$300** for each set. When requesting drawings, specifications or contract documents, provide the following information about your company: Mailing address; street (FedEx) address; telephone number; FAX number (if applicable) and email address.

Bidders should check Lancaster County's "Open Solicitations" web page for any addenda, updates, bid tab and award.

Bidders must deposit security with all bids. Security shall be in the form of a certified check or bid bond made payable to the Owner, and shall be for an amount equal to not less than five percent (5%) of the amount of the bid. Provisions of the security shall be as described in the Information for Bidders.

No bid will be considered unless the bidder is legally qualified under the provisions of the South Carolina Contractor's Licensing Law (SC Code of Laws as amended in 1999, Chapter 11, Sections 40-11-10 through 40-11-428). Contractors shall have current South Carolina and Lancaster County licensure and bond capacity prior to Bid Submission.

NOTICE TO BIDDERS: Each bidder shall fully acquaint themselves with the conditions relating to the scope and restrictions attending the execution of the work under the conditions of this Bid. The failure or omission of a bidder to acquaint themselves with existing conditions shall in no way relieve them of any obligation with respect to this Bid or to the contract. All amendments to and interpretations of this solicitation shall be in writing and issued by Alliance Consulting Engineers, Inc. Neither Lancaster County nor Alliance Consulting Engineers, Inc. shall be legally bound by any amendment or interpretation that is not in writing.

No bidder may withdraw the bid within sixty (60) days after the actual date of the opening and thereof.

The Owner reserves the right to waive any informality or to reject any or all bids. Lancaster County reserves the right to accept or reject any, all or any part of bids received as a result of this request, to waive any informalities or to cancel in part or in its entirety this request, if it is in its best interest to do so. Lancaster County will be sole judge as to whether bids submitted meet all requirements. All bids submitted shall become the property of Lancaster County. This solicitation does not commit Lancaster County to award a contract, to pay any cost incurred in the preparation of bids or to procure or contract for goods or services. Lancaster County is an Equal Opportunity Employer.

ENGINEERS	OWNER
Alliance Consulting Engineers, Inc. Post Office Box 8147 Columbia, South Carolina 29202-8147	Lancaster County 101 N. Main Street Lancaster, South Carolina 29720

The U.S. Department of Commerce Economic Development Administration is providing partial funding for this project (EDA Investment No. 04-01-07416).

SECTION 00 21 13

INSTRUCTIONS TO BIDDERS

TABLE OF CONTENTS

ARTICLE 1 - DEFINED TERMS 2

ARTICLE 2 - COPIES OF BIDDING DOCUMENTS 2

ARTICLE 3 - QUALIFICATIONS OF BIDDERS 2

ARTICLE 4 - EXAMINATION OF BIDDING DOCUMENTS, OTHER RELATED DATA, AND SITE 2

ARTICLE 5 - PRE-BID CONFERENCE 4

ARTICLE 6 - SITE AND OTHER AREAS 4

ARTICLE 7 - INTERPRETATIONS AND ADDENDA 4

ARTICLE 8 - BID SECURITY 5

ARTICLE 9 - CONTRACT TIMES 5

ARTICLE 10 - LIQUIDATED DAMAGES 5

ARTICLE 11 - SUBSTITUTE AND “OR-EQUAL” ITEMS 5

ARTICLE 12 - SUBCONTRACTORS, SUPPLIERS, AND OTHERS 6

ARTICLE 13 - PREPARATION OF BID 6

ARTICLE 14 - BASIS OF BID; COMPARISON OF BIDS 7

ARTICLE 15 - SUBMITTAL OF BID 7

ARTICLE 16 - MODIFICATION AND WITHDRAWAL OF BID 8

ARTICLE 17 - OPENING OF BIDS 8

ARTICLE 18 - BIDS TO REMAIN SUBJECT TO ACCEPTANCE 8

ARTICLE 19 - EVALUATION OF BIDS AND AWARD OF CONTRACT 8

ARTICLE 20 - CONTRACT SECURITY AND INSURANCE 9

ARTICLE 21 - SIGNING OF AGREEMENT 9

ARTICLE 22 - RETAINAGE 9

ARTICLE 1 - DEFINED TERMS

1.01 Terms used in these Instructions to Bidders have the meanings indicated in the General Conditions. Additional terms used in these Instructions to Bidders have the meanings indicated below:

A. Issuing Office - The office from which the Bidding Documents are to be issued and where the bidding procedures are to be administered.

ARTICLE 2 - COPIES OF BIDDING DOCUMENTS

2.01 Complete sets of the Bidding Documents in the number and for the deposit sum, if any, stated in the Advertisement or Invitation to Bid may be obtained from Alliance Consulting Engineers, Inc., 1201 Main Street, Suite 2020, Columbia, South Carolina 29201. The deposit will be nonrefundable and a FedEx account number must be provided for FedEx delivery of Plan Sets.

2.02 Complete sets of Bidding Documents shall be used in preparing Bids; neither Owner nor Engineer assumes any responsibility for errors or misinterpretations resulting from the use of incomplete sets of Bidding Documents.

2.03 Owner and Engineer, in making copies of Bidding Documents available on the above terms, do so only for the purpose of obtaining Bids for the Work and do not confer a license or grant for any other use.

ARTICLE 3 - QUALIFICATIONS OF BIDDERS

3.01 To demonstrate Bidder's qualifications to perform the Work, within five (5) days of Owner's request, Bidder shall submit written evidence such as financial data, previous experience, and present commitments.

ARTICLE 4 - EXAMINATION OF BIDDING DOCUMENTS, OTHER RELATED DATA, AND SITE

4.01 Subsurface and Physical Conditions

A. The General Conditions identify:

1. The reports of explorations and tests of subsurface conditions at or contiguous to the Site that Engineer has used in preparing the Bidding Documents.

2. The drawings of physical conditions in or relating to existing surface and subsurface structures at or contiguous to the Site (except Underground Facilities) that Engineer has used in preparing the Bidding Documents.

B. Copies of reports and drawings referenced in Paragraph 4.01.A are included herein. Those reports and drawings are not part of the Contract Documents, but the "technical data" contained therein upon which Bidder is entitled to rely as provided in Paragraph 4.02 of the General Conditions has been identified and established. Bidder is responsible for any interpretation or conclusion Bidder draws from any "technical data" or any other data, interpretations, opinions or information contained in such reports or shown or indicated in such drawings.

4.02 Underground Facilities

A. Information and data shown or indicated in the Bidding Documents with respect to existing Underground Facilities at or contiguous to the Site is based upon information and data furnished to Owner and Engineer by owners of such Underground Facilities, including Owner, or others.

4.03 Hazardous Environmental Condition

A. The General Conditions identify those reports and drawings relating to a Hazardous Environmental Condition identified at the Site, if any, that Engineer has used in preparing the Bidding Documents.

B. Those reports and drawings are not part of the Contract Documents, but the "technical data" contained therein upon which Bidder is entitled to rely as provided in Paragraph 4.06 of the General Conditions has been identified and established. Bidder is responsible for any interpretation or conclusion Bidder draws from any "technical data" or any other data, interpretations, opinions, or information contained in such reports or shown or indicated in such drawings.

4.04 Provisions concerning responsibilities for the adequacy of data furnished to prospective Bidders with respect to subsurface conditions, other physical conditions and Underground Facilities, and possible changes in the Bidding Documents due to differing or unanticipated conditions appear in Paragraphs 4.02, 4.03, and 4.04 of the General Conditions. Provisions concerning responsibilities for the adequacy of data furnished to prospective Bidders with respect to a Hazardous Environmental Condition at the Site, if any, and possible changes in the Contract Documents due to any Hazardous Environmental Condition uncovered or revealed at the Site which was not shown or indicated in the Drawings or Specifications or identified in the Contract Documents to be within the scope of the Work appear in Paragraph 4.06 of the General Conditions.

4.05 On request, Owner will provide Bidder access to the Site to conduct such examinations, investigations, explorations, tests, and studies as Bidder deems necessary for submission of a Bid. Bidder shall fill all holes and clean up and restore the Site to its former condition upon completion of such explorations, investigations, tests, and studies. Bidder shall comply with all applicable Laws and Regulations relative to excavation and utility locates. Engineer and Owner shall be notified prior to any site visits.

4.06 Reference is made to Article 7 of the General Conditions for the identification of the general nature of other work that is to be performed at the Site by Owner or others (such as utilities and other prime contractors) that relates to the Work contemplated by these Bidding Documents. On request, Owner will provide to each Bidder for examination access to or copies of Contract Documents (other than portions thereof related to price) for such other work.

4.07 It is the responsibility of each Bidder before submitting a Bid to:

A. Examine and carefully study the Bidding Documents, the other related data identified in the Bidding Documents, and any Addenda.

B. Visit the Site and become familiar with and satisfy Bidder as to the general, local, and Site conditions that may affect cost, progress, and performance of the Work.

C. Become familiar with and satisfy Bidder as to all federal, state, and local Laws and Regulations that may affect cost, progress, and performance of the Work.

D. Carefully study all: (1) reports of explorations and tests of subsurface conditions at or contiguous to the Site and all drawings of physical conditions in or relating to existing surface or subsurface structures at or contiguous to the Site (except Underground Facilities), which have been identified in Paragraph 4.02 of the General Conditions, and (2) reports and drawings of Hazardous Environmental Conditions at the Site which have been identified in Paragraph 4.06 of the General Conditions.

E. Obtain and carefully study (or accept consequences of not doing so) all additional or supplementary examinations, investigations, explorations, tests, studies, and data concerning

conditions (surface, subsurface, and Underground Facilities) at or contiguous to the Site, which may affect cost, progress, or performance of the Work or which relate to any aspect of the means, methods, techniques, sequences, and procedures of construction to be employed by Bidder, including applying any specific means, methods, techniques, sequences, and procedures of construction expressly required by the Bidding Documents, and safety precautions and programs incident thereto.

F. Agree at the time of submitting its Bid that no further examinations, investigations, explorations, tests, studies, or data are necessary for the determination of its Bid for performance of the Work at the price(s) bid and within the times and in accordance with the other terms and conditions of the Bidding Documents.

G. Become aware of the general nature of the work to be performed by Owner and others at the Site that relates to the Work as indicated in the Bidding Documents.

H. Correlate the information known to Bidder, information and observations obtained from visits to the Site, reports and drawings identified in the Bidding Documents, and all additional examinations, investigations, explorations, tests, studies, and data with the Bidding Documents.

I. Promptly give Engineer written notice of all conflicts, errors, ambiguities, or discrepancies that Bidder discovers in the Bidding Documents and confirm that the written resolution thereof by Engineer is acceptable to Bidder.

J. Determine that the Bidding Documents are generally sufficient to indicate and convey understanding of all terms and conditions for the performance of the Work.

4.08 The submission of a Bid will constitute an incontrovertible representation by Bidder that Bidder has complied with every requirement of this Article 4, that without exception the Bid is premised upon performing and furnishing the Work required by the Bidding Documents and applying any specific means, methods, techniques, sequences, and procedures of construction that may be shown or indicated or expressly required by the Bidding Documents, that Bidder has given Engineer written notice of all conflicts, errors, ambiguities, and discrepancies that Bidder has discovered in the Bidding Documents and the written resolutions thereof by Engineer are acceptable to Bidder, and that the Bidding Documents are generally sufficient to indicate and convey understanding of all terms and conditions for performing and furnishing the Work.

ARTICLE 5 – PRE-BID CONFERENCE – INTENTIONALLY OMITTED

ARTICLE 6 - SITE AND OTHER AREAS

6.01 The Site is identified in the Bidding Documents. Easements for permanent structures or permanent changes in existing facilities are to be obtained and paid for by Owner unless otherwise provided in the Bidding Documents. All additional land and access thereto required for temporary construction facilities, construction equipment, or storage of materials and equipment to be incorporated in the Work are to be obtained and paid for by Contractor.

ARTICLE 7 - INTERPRETATIONS AND ADDENDA

7.01 All questions about the meaning or intent of the Bidding Documents are to be submitted to Engineer in writing. Interpretations or clarifications considered necessary by Engineer in response to such questions will be issued by Addenda mailed or delivered to all parties recorded by Engineer as having received the Bidding Documents. Questions received less than seven (7) days prior to the date for opening of Bids may not be answered. Only questions answered by Addenda will be binding. Oral and other interpretations or clarifications will be without legal effect.

7.02 Addenda may be issued to clarify, correct, or change the Bidding Documents as deemed advisable by Owner or Engineer.

ARTICLE 8 - BID SECURITY

8.01 A Bid must be accompanied by Bid security made payable to Owner in an amount of five percent (5%) of Bidder's maximum Bid price and in the form of a certified check, bank money order, or a Bid Bond (on the form attached) issued by a surety meeting the requirements of Paragraphs 5.01 and 5.02 of the General Conditions.

8.02 The Bid security of the Successful Bidder will be retained until such Bidder has executed the Contract Documents, furnished the required contract security and met the other conditions of the Notice of Award, whereupon the Bid security will be returned. If the Successful Bidder fails to execute and deliver the Contract Documents and furnish the required contract security within fifteen (15) days after the Notice of Award, Owner may annul the Notice of Award and the Bid security of that Bidder will be forfeited. The Bid security of other Bidders whom Owner believes to have a reasonable chance of receiving the award may be retained by Owner until the earlier of seven (7) days after the Effective Date of the Agreement or sixty-one (61) days after the Bid opening, whereupon Bid security furnished by such Bidders will be returned.

8.03 Bid security of other Bidders whom Owner believes do not have a reasonable chance of receiving the award will be returned within seven (7) days after the Bid opening.

ARTICLE 9 - CONTRACT TIMES

9.01 The time allotted for completion is as follows:

Roadway Improvements to Serve Project Dumpling along MacMillan Park Drive and SC Highway 160 in unincorporated Lancaster County, South Carolina is to be completed within one hundred eighty (180) calendar days after the Notice to Proceed has been issued.

ARTICLE 10 - LIQUIDATED DAMAGES

10.01 Provisions for liquidated damages are set forth in the Agreement

ARTICLE 11 - SUBSTITUTE AND "OR-EQUAL" ITEMS

11.01 The Contract, if awarded, will be on the basis of materials and equipment specified or described in the Bidding Documents, or "or-equal" materials and equipment as defined in paragraph 6.05 of the General Conditions, or those substitute materials and equipment approved by the Engineer and identified by Addendum. The materials and equipment described in the Bidding Documents establish a standard of required type, function and quality to be met by any proposed substitute or "or-equal" item. Request for Engineer's clarification of materials and equipment considered "or equal" prior to the Effective Date of the Agreement must be received by the Engineer at least 5 days prior to the date for the receipt of Bids. No items of material or equipment will be considered by Engineer as a substitute unless written request for approval has been submitted by Bidder and has been received by Engineer at least 15 days prior to the date for receipt of Bids. Each request shall conform to the requirements of paragraph 6.05 of the General Conditions. The burden of proof of the merit of the proposed item is upon the Bidder. Engineer's decision of approval or disapproval of a proposed item will be final. If Engineer approves any proposed substitute item, such approval will be set forth in an Addendum issued to all prospective Bidders. Bidders shall not rely upon approvals made in any other manner.

ARTICLE 12 - SUBCONTRACTORS, SUPPLIERS AND OTHERS

12.01 If the General Conditions require the identity of certain Subcontractors, Suppliers, individuals, or entities to be submitted to Owner in advance of a specified date prior to the Effective Date of the Agreement, the apparent Successful Bidder, and any other Bidder so requested, shall within five (5) days after Bid opening, submit to Owner a list of all such Subcontractors, Suppliers, individuals, or entities proposed for those portions of the Work for which such identification is required. Such list shall be accompanied by an experience statement with pertinent information regarding similar projects and other evidence of qualification for each such Subcontractor, Supplier, individual, or entity if requested by Owner. If Owner or Engineer, after due investigation, has reasonable objection to any proposed Subcontractor, Supplier, individual, or entity, Owner may, before the Notice of Award is given, request apparent Successful Bidder to submit a substitute, in which case apparent Successful Bidder shall submit an acceptable substitute, without an increase in Bid.

12.02 If apparent Successful Bidder declines to make any such substitution, Owner may award the Contract to the next lowest Bidder that proposes to use acceptable Subcontractors, Suppliers, individuals, or entities. Declining to make requested substitutions will not constitute grounds for forfeiture of the Bid security of any Bidder. Any Subcontractor, Supplier, individual, or entity so listed and against which Owner or Engineer makes no written objection prior to the giving of the Notice of Award will be deemed acceptable to Owner and Engineer subject to revocation of such acceptance after the Effective Date of the Agreement as provided in Paragraph 6.06 of the General Conditions.

12.03 Contractor shall not be required to employ any Subcontractor, Supplier, individual, or entity against whom Contractor has reasonable objection.

12.04 The Contractor shall not award work to Subcontractor(s) in excess of the limits stated in SC 6.06.

ARTICLE 13 - PREPARATION OF BID

13.01 The Bid Form is included with the Bidding Documents. Additional copies may be obtained from Engineer.

13.02 All blanks on the Bid Form shall be completed by printing in ink or by typewriter and the Bid signed in ink. Erasures or alterations shall be initialed in ink by the person signing the Bid Form. A Bid price shall be indicated for each unit price item listed therein, or the words “No Bid,” “No Change,” or “Not Applicable” entered.

13.03 A Bid by a corporation shall be executed in the corporate name by the president, vice-president, or other corporate officer accompanied by evidence of authority to sign. The corporate seal shall be affixed and attested by the secretary or an assistant secretary. The corporate address and state of incorporation shall be shown below the signature.

13.04 A Bid by a partnership shall be executed in the partnership name and signed by a partner (whose title must appear under the signature), accompanied by evidence of authority to sign. The official address of the partnership shall be shown below the signature.

13.05 A Bid by a limited liability company shall be executed in the name of the firm by a member and accompanied by evidence of authority to sign. The state of formation of the firm and the official address of the firm shall be shown below the signature.

13.06 A Bid by an individual shall show the Bidder’s name and official address.

13.07 A Bid by a joint venture shall be executed by each joint venturer in the manner indicated on the Bid Form. The official address of the joint venture shall be shown below the signature.

13.08 All names shall be typed or printed in ink below the signatures.

13.09 The Bid shall contain an acknowledgment of receipt of all Addenda, the numbers of which shall be filled in on the Bid Form.

13.10 The postal address and telephone number for communications regarding the Bid shall be shown.

13.11 The Bid shall contain evidence of Bidder's authority and qualification to do business in the state where the Project is located or covenant to obtain such qualification prior to award of the Contract. Bidder's state contractor license number, if any, shall also be shown on the Bid Form.

ARTICLE 14 - BASIS OF BID; COMPARISON OF BIDS

14.02 Unit Price

A. Bidders shall submit a Bid on a unit price basis for each item of Work listed in the Bid schedule.

B. The total of all estimated prices will be the sum of the products of the estimated quantity of each item and the corresponding unit price. The final quantities and Contract Price will be determined in accordance with Paragraph 11.03 of the General Conditions.

C. Discrepancies between the multiplication of units of Work and unit prices will be resolved in favor of the unit prices. Discrepancies between the indicated sum of any column of figures and the correct sum thereof will be resolved in favor of the correct sum. Discrepancies between words and figures will be resolved in favor of the words.

14.03 The Bid price shall include such amounts as the Bidder deems proper for overhead and profit on account of cash allowances, if any, named in the Contract Documents as provided in Paragraph 11.02 of the General Conditions.

14.04 Bid prices will be compared after adjusting for differences in the time designated by Bidders for Substantial Completion. The adjusting amount will be determined at the rate set forth in the Contract Documents for liquidated damages for failing to achieve Substantial Completion for each day before or after the desired date appearing in Article 9.

ARTICLE 15 - SUBMITTAL OF BID

15.01 With each copy of the Bidding Documents, a Bidder is furnished one (1) separate unbound copy of the Bid Form, and, if required, the Bid Bond Form. The unbound copy of the Bid Form is to be completed and submitted with all the attachments outlined in Article 7 of the Bid Form.

15.02 A Bid shall be submitted no later than the date and time prescribed and at the place indicated in the Advertisement for Bids and shall be enclosed in an opaque sealed envelope plainly marked with the Project title (and, if applicable, the designated portion of the Project for which the Bid is submitted), the name and address of Bidder, and shall be accompanied by the Bid security and other required documents. If a Bid is sent by mail or other delivery system, the sealed envelope containing the Bid shall be enclosed in a separate package plainly marked on the outside with the notation "BID ENCLOSED". When using the mail or other delivery system, the Bidder is totally responsible for the mail or other delivery system delivering the Bid at the place and prior to the time indicated in the Advertisement for Bid. A mailed Bid shall be addressed to Owner at address in Article 1.01 of Bid Form.

ARTICLE 16 - MODIFICATION AND WITHDRAWAL OF BID

16.01 A Bid may be modified or withdrawn by an appropriate document duly executed in the manner that a Bid must be executed and delivered to the place where Bids are to be submitted prior to the date and time for the opening of Bids.

16.02 If within 24 hours after Bids are opened any Bidder files a duly signed written notice with Owner and promptly thereafter demonstrates to the reasonable satisfaction of Owner that there was a material and substantial mistake in the preparation of its Bid, that Bidder may withdraw its Bid, and the Bid security will be returned. Thereafter, if the Work is rebid or negotiated, that Bidder will be disqualified from further bidding on the work. The provision to withdraw a Bid without forfeiting the Bid security does not apply to Bidder's errors in judgment in preparing the bid.

ARTICLE 17 - OPENING OF BIDS

17.01 Bids will be opened at the time and place indicated in the Advertisement or Invitation to Bid and, unless obviously non-responsive, read aloud publicly. An abstract of the amounts of the base Bids and major alternates, if any, will be made available to Bidders after the opening of Bids in the form of a Bid Tabulation and Bid Comparison. The Bid Opening Minutes will also be provided to all in attendance.

ARTICLE 18 - BIDS TO REMAIN SUBJECT TO ACCEPTANCE

18.01 All Bids will remain subject to acceptance for the period of time stated in the Bid Form, but Owner may, in its sole discretion, release any Bid and return the Bid security prior to the end of this period.

ARTICLE 19 - EVALUATION OF BIDS AND AWARD OF CONTRACT

19.01 Owner reserves the right to reject any or all Bids, including without limitation, nonconforming, non-responsive, unbalanced, or conditional Bids. Owner further reserves the right to reject the Bid of any Bidder whom it finds, after reasonable inquiry and evaluation, to not be responsible. Owner may also reject the Bid of any Bidder if Owner believes that it would not be in the best interest of the Project to make an award to that Bidder. Owner also reserves the right to waive all informalities not involving price, time, or changes in the Work and to negotiate contract terms with the Successful Bidder.

19.02 More than one Bid for the same Work from an individual or entity under the same or different names will not be considered. Reasonable grounds for believing that any Bidder has an interest in more than one Bid for the Work may be cause for disqualification of that Bidder and the rejection of all Bids in which that Bidder has an interest.

19.03 In evaluating Bids, Owner will consider whether or not the Bids comply with the prescribed requirements, and such alternates, unit prices and other data, as may be requested in the Bid Form or prior to the Notice of Award.

19.04 In evaluating Bidders, Owner will consider the qualifications of Bidders and may consider the qualifications and experience of Subcontractors, Suppliers, and other individuals or entities proposed for those portions of the Work for which the identity of Subcontractors, Suppliers, and other individuals or entities must be submitted as provided in the General Conditions.

19.05 Owner may conduct such investigations as Owner deems necessary to establish the responsibility, qualifications, and financial ability of Bidders, proposed Subcontractors, Suppliers, individuals, or entities to perform the Work in accordance with the Contract Documents.

19.06 If the Contract is to be awarded, Owner will award the Contract to the responsible Bidder whose Bid, conforming with all the material terms and conditions of the Instructions to Bidders, is lowest, price and other factors considered. If detailed in the bid form, factors such as discounts, transportation costs, and life cycle costs may be used to determine which bidder, if any, is to be offered award.

19.07 The Owner reserves the right not to Award the Project.

ARTICLE 20 - CONTRACT SECURITY AND INSURANCE

20.01 Article 5 of the General Conditions sets forth Owner's requirements as to performance and payment bonds and insurance. When the Successful Bidder delivers the executed Agreement to Owner, it shall be accompanied by such bonds.

ARTICLE 21 - SIGNING OF AGREEMENT

21.01 When Owner gives a Notice of Award to the Successful Bidder, it shall be accompanied by the required number of unsigned counterparts of the Agreement with the other Contract Documents which are identified in the Agreement as attached thereto. Within 15 days thereafter, Successful Bidder shall sign and deliver the required number of counterparts of the Agreement and attached documents to Owner. Within 10 days thereafter, Owner shall deliver one (1) fully signed counterpart to Successful Bidder with a complete set of the Drawings with appropriate identification.

21.02 This Contract is expected to be funded in part with funds provided by the Economic Development Administration (EDA).

21.03 Concurrence by the EDA in the award of the Contract is required before the Contract is effective.

ARTICLE 22 – RETAINING

22.01 Retainage from progress payments to the Contractor shall be ten percent (10%) of each payment for work completed and materials stored on-site

END OF SECTION

SECTION 00 41 00
BID FORM

Roadway Improvements to
Serve Project Dumpling along MacMillan Park Drive and SC Highway 160
in unincorporated Lancaster County, South Carolina

TABLE OF ARTICLES

ARTICLE 1 – BID RECIPIENT 2

ARTICLE 2 – BIDDER'S ACKNOWLEDGEMENTS 2

ARTICLE 3 – BIDDER'S REPRESENTATIONS 2

ARTICLE 4 – FURTHER REPRESENTATIONS 3

ARTICLE 5 – BASIS OF BID 4

ARTICLE 6 – TIME OF COMPLETION 6

ARTICLE 7 – ATTACHMENTS TO THIS BID 6

ARTICLE 8 – DEFINED TERMS 6

ARTICLE 9 – BID SUBMITTAL 6

ARTICLE 1 - BID RECIPIENT

1.01 This Bid is submitted to: By mail: In Person:

Lancaster County Procurement Department
101 N. Main Street
Post Office Box 1809
Lancaster, South Carolina 29720

1.02 The undersigned Bidder proposes and agrees, if this Bid is accepted, to enter into an Agreement with Owner in the form included in the Bidding Documents to perform all Work as specified or indicated in the Bidding Documents for the prices and within the times indicated in this Bid and in accordance with the other terms and conditions of the Bidding Documents.

ARTICLE 2 - BIDDER'S ACKNOWLEDGEMENTS

2.01 Bidder accepts all of the terms and conditions of the Instructions to Bidders, including without limitation those dealing with the disposition of Bid security. This Bid will remain subject to acceptance for sixty (60) days after the Bid opening, or for such longer period of time that Bidder may agree to in writing upon request of Owner.

ARTICLE 3 - BIDDER'S REPRESENTATIONS

3.01 In submitting this Bid, Bidder represents that:

A. Bidder has examined and carefully studied the Bidding Documents, the other related data identified in the Bidding Documents, and the following Addenda, receipt of which is hereby acknowledged.

Addendum No.	Addendum Date	Initials
_____	_____	_____
_____	_____	_____
_____	_____	_____

B. Bidder has visited the Site and become familiar with and is satisfied as to the general, local and Site conditions that may affect cost, progress, and performance of the Work.

C. Bidder is familiar with and is satisfied as to all federal, state and local Laws and Regulations that may affect cost, progress and performance of the Work.

D. Bidder has carefully studied all: (1) reports of explorations and tests of subsurface conditions at or contiguous to the Site and all drawings of physical conditions in or relating to existing surface or subsurface structures at or contiguous to the Site (except Underground Facilities), which have been identified in Paragraph 4.02 of General Conditions, and (2) reports and drawings of Hazardous Environmental Conditions that have been identified in Paragraph 4.06 of General Conditions.

E. Bidder has obtained and carefully studied (or accepts the consequences for not doing so) all additional or supplementary examinations, investigations, explorations, tests, studies and data concerning conditions (surface, subsurface and Underground Facilities) at or contiguous to the Site, which may affect cost, progress, or performance of the Work or which relate to any aspect of the means, methods, techniques, sequences, and procedures of construction to be employed by Bidder, including applying the specific means, methods, techniques, sequences, and procedures of construction expressly required by the Bidding Documents to be employed by Bidder, and safety precautions and programs incident thereto.

F. Bidder does not consider that any further examinations, investigations, explorations, tests, studies, or data are necessary for the determination of this Bid for performance of the Work at the price(s) bid and within the times and in accordance with the other terms and conditions of the Bidding Documents.

G. Bidder is aware of the general nature of work to be performed by Owner and others at the Site that relates to the Work as indicated in the Bidding Documents.

H. Bidder has correlated the information known to Bidder, information and observations obtained from visits to the Site, reports and drawings identified in the Bidding Documents, and all additional examinations, investigations, explorations, tests, studies, and data with the Bidding Documents.

I. Bidder has given Owner and Engineer notice via posting on the Lexington County E-Procurement System Question and Answer Board of all conflicts, errors, ambiguities, or discrepancies that Bidder has discovered in the Bidding Documents, and that the public responses posted on the Lexington County E-Procurement System Question and Answer Board by the Owner or Engineer as resolution thereof are acceptable to Bidder.

J. The Bidding Documents are generally sufficient to indicate and convey understanding of all terms and conditions for the performance of the Work for which this Bid is submitted.

K. Bidder will submit written evidence of its authority to do business in the state where the Project is located not later than the date of its execution of the Agreement.

ARTICLE 4 - FURTHER REPRESENTATIONS

4.01 Bidder further represents that:

A. This Bid is genuine and not made in the interest of or on behalf of any undisclosed individual or entity and is not submitted in conformity with any agreement or rules of any group, association, organization or corporation.

B. Bidder has not directly or indirectly induced or solicited any other Bidder to submit a false or sham Bid.

C. Bidder has not solicited or induced any individual or entity to refrain from bidding.

D. Bidder has not sought by collusion to obtain for itself any advantage over any other Bidder or over Owner.

ARTICLE 5 – BASIS OF BID

Base Bid

5.01 Bidder will complete the Work in accordance with the Contract Documents for the following unit price(s):

Roadway Improvements to Serve Project Dumpling along MacMillan Park Drive and SC Highway 160 in unincorporated Lancaster County, South Carolina (EDA Investment No. 04-01-07416 Scope Only)

Item No.	Description	Unit	Estimated Quantity	Unit Price	Bid Price
1	Mobilization/Bonds	LS	1	$	$
2	Traffic Control	LS	1	$	$
3	Silt Fence	LF	1435	$	$
4	Construction Entrance/Exit	EA	1	$	$
5	Clearing and Grubbing	AC	2	$	$
6	Earthwork (Grading/Excavation/Backfill/Compaction)	LS	1	$	$
7	Demolition of Existing Curb and Gutter	LF	1500	$	$
8	Demolition of Existing Storm Drainage	LS	1	$	$
9	Convert Existing Catch Basin to Junction Box	LS	1	$	$
10	Remove & Relocate Existing Signage	LS	1	$	$
11	Remove & Relocate Existing Light Pole	LS	1	$	$
12	Remove & Relocate Existing Trees	LS	1	$	$
13	Concrete Curb and Gutter	LF	1500	$	$
14	8-Inch Aggregate Base Course (GABC)	SY	1100	$	$
15	4-Inch Asphalt Intermediate Binder Course (Type B)	SY	1100	$	$
16	2-Inch Asphalt Surface Course (Type B)	SY	4000	$	$
17	2-Inch Asphalt Milling	SY	2900	$	$
18	Asphalt Overlay Tack Coat	SY	2900	$	$
19	Striping/Signage	LS	1	$	$
20	Retiming of Existing Traffic Signal	LS	1	$	$
21	Grassing	AC	1	$	$
22	Catch Basin	EA	2	$	$
23	Junction Box	EA	1	$	$
24	15-Inch RCP Storm Drainage	LF	20	$	$
25	24-Inch RCP Storm Drainage	LF	48	$	$
26	Flared End Section	EA	1	$	$
27	Inlet Protection	EA	3	$	$
28	Rip Rap Outlet Protection	SY	35	$	$
29	Rip Rap Check Dams	EA	7	$	$
30	Erosion Control Matting (North American Green SC-150)	SY	1100	$	$
34	Adjust Existing Wastewater Manhole Lid	LS	1	$	$

Total Base Bid: $

_____Dollars_____Cents

($_____)

Roadway Improvements to Serve Project Dumpling along MacMillan Park Drive and SC Highway 160 in unincorporated Lancaster County, South Carolina

Item No.	Description	Unit	Estimated Quantity	Unit Price	Bid Price
1	Mobilization/Bonds	LS	1	$	$
2	Traffic Control	LS	1	$	$
3	Silt Fence	LF	520	$	$
4	Construction Entrance/Exit	EA	1	$	$
5	Clearing and Grubbing	AC	1	$	$
6	Earthwork (Grading/Excavation/Backfill/Compaction)	LS	1	$	$
13	5-Inch (550 LBS/SY) Asphalt Aggregate Base Course (AABC) (Type B)	SY	320	$	$
14	2.27-Inch (250 LBS/SY) Asphalt Intermediate Binder Course (Type C)	SY	320	$	$
15	1.82-Inch (200 LBS/SY) Asphalt Surface Course (Type C)	SY	920		
16	2-Inch Asphalt Milling	SY	600	$	$
17	Asphalt Overlay Tack Coat	SY	600	$	$
18	Striping/Signage	LS	1	$	$
20	Grassing	AC	1	$	$
26	Rip Rap Check Dam	EA	7	$	$

Total Base Bid: $

_____Dollars_____Cents

($_____)

Bidder acknowledges that estimated quantities are not guaranteed, and are solely for the purpose of comparison of Bids, and final payment for all Unit Price Bid items will be based on actual quantities, determined as provided in the Contract Documents.

ARTICLE 6 - TIME OF COMPLETION

6.01 **Bidder agrees that the Work: Roadway Improvements to Serve Project Dumpling along MacMillan Park Drive and SC Highway 160 in unincorporated Lancaster County, South Carolina is to be completed within one hundred eighty (180) calendar days for the Base Bid scope of work after the Notice to Proceed has been issued.**

6.02 Bidder accepts the provisions of the Agreement as to liquidated damages in the event of failure to complete the Work within the Contract dates in the amount of $1,500 per day for each calendar day required to complete the work in the manner and within the dates as stated in Paragraph 6.01 above.

ARTICLE 7 - ATTACHMENTS TO THIS BID

7.01 The following documents are attached to and made a condition of this Bid:

A. Required Bid security in the form of five percent (5%) of the total bid amount.

B. Power of Attorney.

ARTICLE 8 - DEFINED TERMS

8.01 The terms used in this Bid with initial capital letters have the meanings stated in the Instructions to Bidders and General Conditions.

ARTICLE 9 - BID SUBMITTAL

9.01 This Bid submitted by:

An Individual

Name (typed or printed): _____

By: _____ (SEAL)

(Individual's signature)

Title: _____

Doing business as: _____

A Partnership

Partnership Name: _____ (SEAL)

By: _____

(Signature of general partner -- attach evidence of authority to sign)

Title: _____

Name (typed or printed): _____

A Corporation

Corporation Name: _____ (SEAL)

State of Incorporation: _____

Type (General Business, Professional, Service, Limited Liability):_____

By: _____

(Signature -- attach evidence of authority to sign)

Name (typed or printed): _____

Title: _____(CORPORATE SEAL)

Attest _____

Date of Authorization to do business in *[South Carolina]* is _____/_____/_____.

A Joint Venture

Name of Joint Venture: _____

First Joint Venturer Name: _____ (SEAL)

By: _____

(Signature of first joint venture partner -- attach evidence of authority to sign)

Name (typed or printed): _____

Title: _____

Second Joint Venturer Name: _____ (SEAL)

By: _____

(Signature of second joint venture partner -- attach evidence of authority to sign)

Name (typed or printed): _____

Title: _____

(Each joint venturer must sign. The manner of signing for each individual, partnership, and corporation that is a party to the joint venture should be in the manner indicated above.)

Bidder's Business Address _____

_____

_____

Telephone No.: _____ Fax No.:_____

SUBMITTED on _____, 2020.

State Contractor License No. _____.

SECTION 00 43 00

BID BOND

Any singular reference to Bidder, Surety, Owner, or other party shall be considered plural where applicable.

BIDDER (Name and Address):

SURETY (Name and Address of Principal Place of Business):

OWNER (Name and Address): **Lancaster County**
101 N. Main Street
Lancaster, South Carolina 29720

BID
Bid Due Date: **Thursday June 18, 2020 at 2:00 PM**

Project (Brief Description Including Location): **Roadway Improvements to Serve Project Dumpling along MacMillan Park Drive and SC Highway 160 in unincorporated Lancaster County, South Carolina**

BOND
Bond Number:
Date (Not later than Bid due date):
Penal sum _____ _____
(Words) (Figures)

Surety and Bidder, intending to be legally bound hereby, subject to the terms printed on the reverse side hereof, do each cause this Bid Bond to be duly executed on its behalf by its authorized officer, agent, or representative.

BIDDER	SURETY
_____ (Seal)	_____ (Seal)
Bidder's Name and Corporate Seal	Surety's Name and Corporate Seal
By: _____	By: _____
Signature and Title	Signature and Title (Attach Power of Attorney)
Attest: _____	Attest: _____
Signature and Title	Signature and Title

Note: Above addresses are to be used for giving required notice.

1. Bidder and Surety, jointly and severally, bind themselves, their heirs, executors, administrators, successors and assigns to pay to Owner upon default of Bidder the penal sum set forth on the face of this Bond. Payment of the penal sum is the extent of Surety's liability.

2. Default of Bidder shall occur upon the failure of Bidder to deliver within the time required by the Bidding Documents (or any extension thereof agreed to in writing by Owner) the executed Agreement required by the Bidding Documents and any performance and payment bonds required by the Bidding Documents.

3. This obligation shall be null and void if:
   3.1. Owner accepts Bidder's Bid and Bidder delivers within the time required by the Bidding Documents (or any extension thereof agreed to in writing by Owner) the executed Agreement required by the Bidding Documents and any performance and payment bonds required by the Bidding Documents, or
   3.2. All Bids are rejected by Owner, or
   3.3. Owner fails to issue a Notice of Award to Bidder within the time specified in the Bidding Documents (or any extension thereof agreed to in writing by Bidder and, if applicable, consented to by Surety when required by Paragraph 5 hereof).

4. Payment under this Bond will be due and payable upon default by Bidder and within 30 calendar days after receipt by Bidder and Surety of written notice of default from Owner, which notice will be given with reasonable promptness, identifying this Bond and the Project and including a statement of the amount due.

5. Surety waives notice of any and all defenses based on or arising out of any time extension to issue Notice of Award agreed to in writing by Owner and Bidder, provided that the total time for issuing Notice of Award including extensions shall not in the aggregate exceed 120 days from Bid due date without Surety's written consent.

6. No suit or action shall be commenced under this Bond prior to 30 calendar days after the notice of default required in Paragraph 4 above is received by Bidder and Surety and in no case later than one year after Bid due date.

7. Any suit or action under this Bond shall be commenced only in a court of competent jurisdiction located in the state in which the Project is located.

8. Notices required hereunder shall be in writing and sent to Bidder and Surety at their respective addresses shown on the face of this Bond. Such notices may be sent by personal delivery, commercial courier, or by United States Registered or Certified Mail, return receipt requested, postage pre-paid, and shall be deemed to be effective upon receipt by the party concerned.

9. Surety shall cause to be attached to this Bond a current and effective Power of Attorney evidencing the authority of the officer, agent, or representative who executed this Bond on behalf of Surety to execute, seal, and deliver such Bond and bind the Surety thereby.

10. This Bond is intended to conform to all applicable statutory requirements. Any applicable requirement of any applicable statute that has been omitted from this Bond shall be deemed to be included herein as if set forth at length. If any provision of this Bond conflicts with any applicable statute, then the provision of said statute shall govern and the remainder of this Bond that is not in conflict therewith shall continue in full force and effect.

11. The term "Bid" as used herein includes a Bid, offer, or proposal as applicable

SECTION 00 43 93

BIDDER'S SUBMITTAL CHECKLIST

PROJECT: Roadway Improvements to Serve Project Dumpling along MacMillan Park Drive and SC Highway 160 in unincorporated Lancaster County, South Carolina

PROJECT NO. 19128-0029

BIDDER NAME: _____

DATE: _____

1.0 This checklist shall be included as the first page of the submitted bidding documents. As outlined in ARTICLE 7 of the BID FORM the following items shall be included with the submitted bidding documents:

CHECK (✓)	ITEM	DESCRIPTION
	-	Properly Executed Bid Form (Including the acknowledgement of all Addenda)
	A.	Required Bid security in the form of a Bid Bond (EJCDC No. C-430) or Certified Check in the amount of five percent (5%) of the total bid amount
	B.	List of Proposed Subcontractors; (must be submitted within five (5) days of the Bid Opening)
	C.	List of Proposed Suppliers; (must be submitted within five (5) days of the Bid Opening)
	D.	List of Project References; (must be submitted within five (5) days of the Bid Opening)
	E.	Evidence of authority to do business in the State of South Carolina, or written covenant to obtain such license within the time frame for acceptance of Bids;
	F.	Contractor License Number or evidence of Bidder's ability to obtain a State Contractor's License and covenant by Bidder to obtain said license within the time for acceptance of Bids.
	G.	Required Bidder Qualification Statement with Supporting Data; (must be submitted within five (5) days of the Bid Opening)
	H.	Completed Bidder's Submittal Checklist
	I.	Completed and signed copy of the Bid Documents on USB drive

END OF SECTION

SECTION 00 45 13

CONTRACTOR/SUBCONTRACTOR QUALIFICATIONS

PART 1 GENERAL

1.01 The following information and completed forms may be requested by the Owner of the three lowest bidders. The request will be made the day of the Bid Opening or within five (5) days following the Bid Opening. If requested, this data must be submitted to the Engineer or Owner within ten (10) days of the request. Failure to provide the data in this section, upon request, may subject bidder to disqualification.

1.02 DESCRIPTION

Contractor shall provide with its bid, the following 1 original and 3 copies which should be collated, fastened together, and clearly labeled.

A. Information provided will be used by the Engineer or Owner to determine the competency and ability of the Contractor and/or Subcontractor to perform the scheduled work in a manner that is satisfactory to the Engineer or Owner. The Engineer's or Owner's decision shall be final.

B. Any Subcontractor being used by the General Contractor, whose portion of the project exceeds 5% of the total bid price amount, will be required to provide the same information as the General Contractor.

C. The Contractor and Subcontractor shall include with this section a detailed financial statement indicating the Contractor's or Subcontractor's financial resources. The information on that statement shall be certified by a Certified Public Accountant and shall be submitted on the Associated General Contractor's of America form "Standard Questionnaires and Financial Statement for Bidders".

D. The Contractor and Subcontractor shall certify by attaching his signature to this Section as provided that all information contained herein is complete and all statements and answers are accurate and true. Providing misinformation, incomplete information, inaccurate information, or failure to certify the information, will subject bidder to disqualification.

1.03 QUALIFICATIONS

A. Complete the following for General Contractor and any Subcontractors (attach additional sheets as required):

1. Name: _____
2. Address: _____
3. City, State, Zip: _____
4. Principle: _____

B. Number of years the company has been is business:_____

C. List and describe at least five (5) projects that have been completed, that are similar in size and type, and that has been completed within the last ten (10) years:

1. _____
_____

2. _____
_____

3. _____
_____

4. _____
_____

5. _____
_____

D. For the projects listed above provide the following:

1. Project Owner: _____
Contact Name and Title: _____
Telephone Number: _____

2. Project Owner: _____
Contact Name and Title: _____
Telephone Number: _____

3. Project Owner: _____
Contact Name and Title: _____
Telephone Number: _____

4. Project Owner: _____
Contact Name and Title: _____
Telephone Number: _____

5. Project Owner: _____
Contact Name and Title: _____
Telephone Number: _____

E. For each of the projects listed in Items C & D provide the following:

1. Original Bid Amount: _____
Final Construction Cost: _____
Contract Period: _____
Actual Contract Period: _____
Explanation: _____

2. Original Bid Amount: _____
Final Construction Cost: _____
Contract Period: _____
Actual Contract Period: _____
Explanation: _____

3. Original Bid Amount: _____
Final Construction Cost: _____
Contract Period: _____
Actual Contract Period: _____
Explanation: _____

4. Original Bid Amount: _____
Final Construction Cost: _____
Contract Period: _____
Actual Contract Period: _____
Explanation: _____

5. Original Bid Amount: _____
Final Construction Cost: _____
Contract Period: _____
Actual Contract Period: _____
Explanation: _____

F. Provide the following for any portion of the work that is being subcontracted (5% or more of the Bid Amount):

1. Name of Subcontractor: _____
Address: _____
Telephone Number: _____
Work being Completed: _____

2. Name of Subcontractor: _____
Address City/State/Zip: _____
Telephone Number: _____
Work being Completed: _____

3. Name of Subcontractor: _____
Address City/State/Zip: _____
Telephone Number: _____
Work being Completed: _____

4. Name of Subcontractor: _____
Address City/State/Zip: _____
Telephone Number: _____
Work being Completed: _____

5. Name of Subcontractor: _____
Address City/State/Zip: _____
Telephone Number: _____
Work being Completed: _____

G. Provide a list of equipment that is owned by the Contractor and is available for this project.

_____
_____

H. Provide a list of equipment that will be purchased, leased or rented for this project.

_____
_____

I. Provide a list of the superintendent(s) or others that will be in charge of this project (Provide resumes and qualifications):

_____
_____
_____
_____

J. Provide the following for current projects being completed:

1. Project Name: _____
   Owner: _____
   Current Status: _____
   Estimated Schedule of Completion: _____

2. Project Name: _____
   Owner: _____
   Current Status: _____
   Estimated Schedule of Completion: _____

3. Project Name: _____
   Owner: _____
   Current Status: _____
   Estimated Schedule of Completion: _____

4. Project Name: _____
   Owner: _____
   Current Status: _____
   Estimated Schedule of Completion: _____

5. Project Name: _____
   Owner: _____
   Current Status: _____
   Estimated Schedule of Completion: _____

K. Provide a list of projects that have been completed with the Owner over the past fifteen (15) years:

1. Project Name: _____
   Contact Name and Title: _____
   Telephone Number: _____

2. Project Name: _____
   Contact Name and Title: _____
   Telephone Number: _____

3. Project Name: _____
   Contact Name and Title: _____
   Telephone Number: _____

4. Project Name: _____
   Contact Name and Title: _____
   Telephone Number: _____

5. Project Name: _____
   Contact Name and Title: _____
   Telephone Number: _____

L. Provide a list of projects that Bid with the Owner over the past fifteen (15) years:

1. Project Name: _____
   Contact Name and Title: _____
   Telephone Number: _____

2. Project Name: _____
   Contact Name and Title: _____
   Telephone Number: _____

3. Project Name: _____
   Contact Name and Title: _____
   Telephone Number: _____

4. Project Name: _____
   Contact Name and Title: _____
   Telephone Number: _____

5. Project Name: _____
   Contact Name and Title: _____
   Telephone Number: _____

M. Provide a list of projects completed with the Engineer over the past fifteen (15) years:

1. Project Name: _____
   Project Engineer: _____
   Original Bid Amount: _____
   Final Construction Cost: _____
   Contract Period: _____
   Actual Contract Period: _____
   Explanation: _____

2. Project Name: _____
   Project Engineer: _____
   Original Bid Amount: _____
   Final Construction Cost: _____
   Contract Period: _____
   Actual Contract Period: _____
   Explanation: _____

3. Project Name: _____
   Project Engineer: _____
   Original Bid Amount: _____
   Final Construction Cost: _____
   Contract Period: _____
   Actual Contract Period: _____
   Explanation: _____

4. Project Name: _____
   Project Engineer: _____
   Original Bid Amount: _____
   Final Construction Cost: _____
   Contract Period: _____
   Actual Contract Period: _____
   Explanation: _____

5. Project Name: _____
Project Engineer: _____
Original Bid Amount: _____
Final Construction Cost: _____
Contract Period: _____
Actual Contract Period: _____
Explanation: _____

N. Provide a list of projects involved with litigation, arbitration and/or mediation over the past twenty (20) years:

1. Project Name: _____
Project Owner: _____
Project Engineer: _____
Date: _____
Explanation: _____

2. Project Name: _____
Project Owner: _____
Project Engineer: _____
Date: _____
Explanation: _____

3. Project Name: _____
Project Owner: _____
Project Engineer: _____
Date: _____
Explanation: _____

4. Project Name: _____
Project Owner: _____
Project Engineer: _____
Date: _____
Explanation: _____

5. Project Name: _____
Project Owner: _____
Project Engineer: _____
Date: _____
Explanation: _____

O. Attach a rate schedule associated with equipment that includes labor, overhead and profit.

_____Rate Schedule Attached.

P. Additional information if Necessary.

_____
_____
_____
_____
_____
_____
_____

1.04 I HEREBY CERTIFY that as a duly authorized representative of _____ _____(bidder), the information provided is to the best of my knowledge accurate and that failure to provide accurate information will result in disqualification of my bid.

_____
Signature

_____
Name (Please Print)

_____
Title

_____
Date

_____
Notary Public for South Carolina
My Commission Expires: _____

PART 2 PRODUCTS - NOT USED

PART 3 EXECUTION - NOT USED

END OF SECTION

SECTION 00 45 36

EEO CONTRACT COMPLIANCE NOTICES

UNITED STATES DEPARTMENT OF AGRICULTURE

EQUAL EMPLOYMENT OPPORTUNITY (EEO)

CONTRACT COMPLIANCE NOTICES

(1). The following notices shall be included in all solicitations for offers and bids on all Federal and Federally assisted construction contracts or subcontracts in excess of $10,000 pursuant to Department of Labor (OFCCP) regulations 41 CFR, Part 604.

NOTICE OF REQUIREMENT FOR AFFIRMATIVE ACTION TO ENSURE EQUAL EMPLOYMENT OPPORTUNITY (EXECUTIVE ORDER 11246)

1. The Offerors or Bidder's attention is called to the "Equal Opportunity Clause" and the "Standard Federal Equal Employment Opportunity Construction Contract Specifications" set forth herein.

2. The goals and timetables for minority and female participation, expressed in percentage terms for the Contractor's aggregate workforce in each trade on all construction work in the covered area, are as follows:

   Timetables: Goals for female and minority participation is 6.9% and 32% respectively.

   These goals are applicable to all the Contractors construction work (whether or it is federal or federally assisted) performed in the covered area.

   The Contractor’s compliance with the Executive Order and the regulations in 41 CFR Part 60-4 shall be based on its implementation of the Equal Opportunity Clause, specific affirmative action obligations required by the specifications set forth in 41 CFR 60-4.3(a), and its efforts to meet the goals established for the geographical area where the contract resulting from this solicitation is to be performed. The hours of minority and female employment and training must be substantially uniform throughout the length of the contract and in each trade and the contractor shall make a good faith effort to employ minorities and women evenly on each of its projects. The transfer of minority or female employees or trainees from Contractor to Contractor or from project to project for the sole purpose of meeting the Contractor's goals shall be a violation of the contract, the Executive Order and the regulation in 41 CFR Part 60-4. Compliance with the goals will be measured against the total work hours performed.

3. The Contractor shall provide written notification to the Director of the Office of Federal Contract Compliance programs within 10 working days of award of any construction subcontract in excess of $10,000 at any tier for construction work under the contract resulting from this solicitation. The notification shall list the name, address and telephone number of the subcontractor, employer identification number, estimated dollar amount of the subcontract; estimated starting and completion dates of the subcontract; and the geographical area in which the contract is to be performed.

4. As used in this Notice, and in the contract resulting from this solicitation, the "covered area" is Calhoun County, South Carolina.

STANDARD FEDERAL EQUAL EMPLOYMENT OPPORTUNITY CONSTRUCTION

CONTRACT SPECIFICATIONS (EXECUTIVE ORDER 11246)

1. As used in these specifications:

   a. "Covered area" means the geographical area described in the solicitation from which this contract resulted;

   b. "Director" means Director, Office of Federal Contract Compliance Programs, United States Department of Labor, or any person to whom the Director delegates authority;

   c. "Employer identification number" means the Federal Social Security number used on the Employer's Quarterly Federal Tax Return, U.S. Treasury Department Form 941.

   d. "Minority" Includes:

      i) Black (all persons having origins in the Black African racial groups not of Hispanic origin):

      ii) Hispanic (all persons of Mexican, Puerto Rican, Cuban, Central or South American or other Spanish Culture or origin, regardless of race):

      (iii) Asian and Pacific Islander (all persons having origins in any of the, original peoples of the Far East, Southeast Asia, the Indian Subcontinent, or the Pacific Islands); and

      (iv) American Indian or Alaskan Native (all persons having origins in any of the original peoples of North America and maintaining identifiable tribal affiliations through membership and participation or community identification).

2. Whenever the Contractor, or any Subcontractor at any tier, subcontracts a portion of the work involving any construction trade, it shall physically include in each subcontract in excess of $10,000 the provisions of these specifications and the Notice which contains the applicable goals for minority and female participation and which is set forth in the solicitations from which this contract resulted.

3. If the Contractor is participating (pursuant to 41 CFR 60-4.5) in a Hometown Plan approved by the U.S. Department of Labor, in the covered area either individually through an association, its affirmative action obligations on all work in the Plan area (including goals and timetables) shall be in accordance with that Plan for those trades which have unions participating in the Plan. Contractors must be able to demonstrate their participation in and compliance with the provision of any such Home town Plan. Each Contractor or Subcontractor participating in an approved Plan is individually required to comply with its Obligations under the EEO clause, and to make a good faith effort to achieve each goal under the Plan in each trade in which it has employees. The overall good faith performance by other Contractors or Subcontractors toward a goal in an approved Plan does not excuse any covered Contractor's or Subcontractor's failure to take good faith efforts to achieve the Plan goals and timetables.

4. The Contractor shall implement the specific affirmative action standards provided in paragraphs 7a through 7p of these specifications. The goals set forth in the solicitation from which this contract resulted are expressed as percentages of the total hours of employment and training of minority and female utilization the Contractor should reasonably be able to achieve in each construction trade in which it has employees in the covered area. The Contractor is expected to make substantially uniform progress toward its goals in each craft during the period specified.

5. Neither the provisions of any collective bargaining agreement, nor the failure by a union with whom the Contractor has a collective bargaining agreement, or the failure by a union with whom the Contractor has a collective bargaining agreement, to refer either minorities or women shall excuse the Contractor's obligations under these specifications, Executive Order 11246, or the regulations promulgated pursuant thereto.

6. In order for the nonworking training hours of apprentices, and trainees to be counted in meeting the goals, such apprentices and trainees must be employed by the Contractor during the training period, and the Contractor must have made a commitment to employ the apprentices and trainees at the completion of their training, subject to the availability of employment opportunities. Trainees must be trained pursuant to training programs approved by the U.S. Department of Labor.

7. The Contract shall take specific affirmative actions to ensure equal employment opportunity. The evaluation of the Contractor's compliance with these specifications shall be based upon its effort to achieve maximum results from its actions. The Contractor shall document these efforts fully, and shall implement affirmative action steps at least as extensive as the following:

    a. Ensure and maintain a working environment free of harassment, intimidation, and coercion at all sites and in all facilities at which the Contractor's employees are assigned to work. The Contractor, where possible, will assign two or more women to each construction project. The Contractor shall specifically ensure that all foremen, superintendents, and other on-site supervisory personnel are aware of and carry out the Contractor's obligation to maintain such a working environment, with specific attention to minority or female individuals working at such sites or in such facilities.

    b. Establish and maintain a current list of minority and female recruitment sources, provide written notification to minority and female recruitment sources and to community organizations when the Contractor or its unions have employment opportunities available, and maintain a record of the organizations responses.

    c. Maintain a current file of the names, addresses and telephone numbers of each minority and female off-the-street applicant and minority or female referral from a union, a recruitment source or community organization and of what action was taken with respect to each such individual. If such individual was sent to the union hiring hall for referral and was not referred back to the Contractor by the union or, if referred, not employed by the Contractor. This shall be documented in the file with the reason therefore, along with whatever additional actions the Contractor may have taken.

    d. Provide immediate written notification to the Director when the union or unions with which the Contractor has a collective bargaining agreement has not referred to the Contractor a minority person or woman sent by the Contractor, or when the Contractor has other information that the union referral process has impeded the Contractor’s efforts to meet its obligations.

    e. Develop on-the-job training opportunities and/or participate in training programs for the area which expressly include minorities and women, including upgrading program and apprenticeship and trainee programs relevant to the Contractor's employment needs, especially those programs funded or approved by the Department of Labor. The Contractor shall provide notice of these programs to the sources compiled under 7b above

    f. Disseminate the Contractor's EEO policy by providing notice of the policy to unions and training programs and requesting their cooperation in assisting the Contractor in meeting its EEO obligations, by including it in any policy manual and collective bargaining agreement: by publicizing it in the company newspaper, annual report, etc., by specific review of the policy with all management personnel and with all minority and female employees at least once a year, and by posting the company EEO policy on bulletin boards accessible to all employees at each location where construction work is performed.

    g. Review at least annually, the company's EEO policy and affirmative action obligations under these specifications with all employees having any responsible for hiring, assignment, layoff, termination or other employment decisions including specific review of these items with onsite supervisory personnel such as Superintendents, General Foremen, etc., prior to the initiation of construction work at any job site. A written record shall be made and maintained identifying the time and place of these meetings, persons attending, subject matter discussed, and disposition of the subject matter.

    h. Disseminate the Contractor's EEO policy externally by including it in any advertising in the news media, specifically including minority and female news media, and providing written notification to and discussing

the Contractor's EEO policy with other Contractors and Subcontractors with whom the Contractor does or anticipates doing business.

i. Direct its recruitment efforts, both oral and written to minority, female and community organizations, to schools with minority and female students and minority and female recruitment and training organizations serving the contractor's recruitment area and employment needs. Not later than one month prior to the date for the acceptance of applications for apprenticeship or other training by any recruitment source, the Contractor shall send written notification to organizations such as the above, describing the openings, screening procedures, and tests to be used in the selection process.

j. Encourage present minority and female employees to recruit other minority persons and women and, where reasonable, provide after school, summer and vacation employment to minority and female youth both on the site and in other areas of a Contractor's work force.

k. Validate all tests and other selection recruitment's where there is an obligation to do so under 41 CFR Part 60-3.

1. Conduct, at least annually, an inventory and evaluation at least of all minority and female personnel for promotional opportunities and encourage these employees to seek or to prepare for, through appropriate training. etc., such opportunities.

m. Ensure that seniority practices, job classifications, work assignments and other personnel practices, do not have a discriminatory effect by continually monitoring all personnel and employment related activities to ensure that the EEO policy and the Contractor's obligations under these specifications are being carried out.

n. Ensure that all facilities and company activities are non-segregated except that separate or single-user toilet and necessary changing facilities shall be provided to assure privacy between the sexes.

o. Document and maintain a record of all solicitations of offers for subcontractors from minority and female construction contractors and suppliers, including circulation of solicitations to minority and female contractor associations and other business associations.

p. Conduct a review at least annually of all supervisors' adherence to and performance under the Contractor's EEO policies and affirmative action obligations.

8. Contractors are encouraged to participate in voluntary associations which assist in fulfilling one or more of their affirmative action obligations (7a through P). The efforts of a contractor association, joint contractor-union, contractor-community, or other similar group of which the contractor is a member and participant may be asserted is fulfilling any one or more of its obligations under 7a through P of these Specifications provided that the contract, or actively participates in the group. Makes every effort to assure that the group has a positive impact on the employment of minorities and women in the industry, ensures that the concrete benefits of the program are reflected in the Contractor's minority and female workforce participation makes good faith effort to meet its individual goals and timetables, and can provide access to documentation which demonstrates the effectiveness of actions taken on behalf of the Contractor. The obligation to comply, however, is the Contractor's and failure of such a group to fulfill an obligation shall not be a defense for the Contractor's noncompliance.

9. A single goal for minorities and a separate single goal for women have been established. The Contractor, however, is required to provide equal employment opportunity and to take affirmative action for all minority groups, both male and female, and all women, both minority and non-minority, consequently, the Contractor may be in violation of the Executive Order if a particular group is employed in a substantially disparate manner (for example, even though the Contractor has achieved its goals for women generally, the Contractor may be in violation of the Executive Order if minority group of women is underutilized.

10. The Contractor shall not use the goals and timetables or affirmative action standards to discriminate against any person because of race, color, religion, sex, or national origin.

11. The Contractor shall not enter into any Subcontract with any person or firm debarred from Government contracts pursuant to executive Order 11246.

12. The Contractor shall carry out such sanctions and penalties for violation of these specifications and of the Equal Opportunity Clause, including suspension, termination and cancellation of existing subcontracts as may be imposed or ordered pursuant to Executive Order 11246, as amended and its implementing regulations, by the Office of Federal Contract Compliance Programs. Any Contractor who fails to carry out such sanctions and penalties shall be in violation of these specifications and Executive Order 11246, as amended.

13. The Contractor, in fulfilling its obligations under these specifications shall implement specific affirmative action steps, at least as extensive as those standards prescribed in paragraph 7 of these specification, so as to achieve maximum results from its efforts to ensure equal employment opportunity. If the Contractor fails to comply with the requirements of the Executive Order, the implementing regulations, or these specifications, the Director shall proceed in accordance with 41 CFR 60-4.8. The Contractor shall designate a responsible official to monitor all employment related activity to ensure that the company EEO policy is being carried out, to submit reports relating to the provisions hereof as may be required by the Government and to keep records. Records shall at least include for each employee the name, address, telephone numbers, construction trade, union affiliation if any, employee identification number when assigned social security number, race, sex, status (e.g.. mechanic, apprentice trainee, helper, or laborer), dates of changes in status, hours worked per week in the indicated trade, rate of pay, and locations at which the work was performed. Records shall maintained in an easily understandable and retrievable form, however, to the degree that existing records satisfy this requirement, contractors shall not be required to maintain separate records.

14. Nothing herein provided shall be construed as a limitation upon the application other laws which establish different standards of compliance or upon the application of requirements for the hiring of local or other area residents (e.g., those under the Public Works Employment Act of 1977 and the Community Development , Block Grant Program).

SECTION 00 50 50

NOTICE OF INTENT TO AWARD

OWNER: Lancaster County
(Name)

PROJECT: Roadway Improvements to serve Project Dumpling along MacMillan Park Drive and SC Highway 160 Lancaster County, South Carolina

Alliance Consulting Engineers, Inc. Project No. 19128-0029;
EDA Investment No. 04-01-07416

TO ALL BIDDERS

This is to notify all bidders that it is the intent of the owner to award a contract as follows:

NAME OF BIDDER: _____

DATES BIDS WERE RECEIVED: _____

AMOUNT OF BASE BID: $ _____

ALTERNATE(S) ACCEPTED: # $ _____

TOTAL AMOUNT OF BASE BID WITH ALTERNATE(S): $ _____

The owner has determined that the above named bidder is responsible and has submitted the lowest responsive bid. Following a 10-day protest period and subject to the contract review by EDA, the owner may enter into a contract with this bidder.

_____ _____
(PRINT OR TYPE NAME) (AWARD AUTHORITY TITLE)

_____ _____
(SIGNATURE) (DATE POSTED)

POST A COPY OF THIS FORM AT THE LOCATION ANNOUNCED AT BID OPENING

SECTION 00 51 02

NOTICE OF AWARD

Date_____

Project: Roadway Improvements to Serve Project Dumpling along MacMillan Park Drive and SC Highway 160 in unincorporated Lancaster County, South Carolina	Owner: Lancaster County	Owner's Contract No.:
Contract:		Engineer's Project No.: 19128-0029

Bidder:

Bidder's Address: (send Certified Mail, Return Receipt Requested):

You are notified that your Bid dated _____ for the above Contract has been considered.

You are the Successful Bidder and are awarded a Contract for the Phase I and II Roadway Improvements to Serve Project Dumpling along MacMillan Park Drive near the Town of Fort Mill in Lancaster County, South Carolina.

The Contract Price of your Contract is
_____($_____)

___ copies of each of the proposed Contract Documents (except Drawings) accompany this Notice of Award.
___ sets of the Drawings will be delivered separately or otherwise made available to you immediately.

You must comply with the following conditions precedent within fifteen (15) days of the date you receive this Notice of Award.

1. Deliver to the Owner five (5) fully-executed counterparts of the Contract Documents.
2. Deliver with the executed Contract Documents the Contract security [Bonds] as specified in the Instructions to Bidders (Article 20), [and] General Conditions (Paragraph 5.01).
3. Other conditions precedent: None

Failure to comply with these conditions within the time specified will entitle Owner to consider you in default, annul this Notice of Award and declare your Bid security forfeited.

Within **ten (10) days** after you comply with the above conditions, Owner will return to you one (1) fully executed counterpart of the Contract Documents.

_____
Owner

By:_____
Authorized Signature

_____
Title

Acceptance of Notice

Receipt of the above Notice of Award is hereby acknowledged by _____
This the _____ day of _____, 20___.

_____
Contractor

By:_____
Authorized Signature

_____
Title

Copy to Engineer

SECTION 00 55 00

NOTICE TO PROCEED

Date _____

Project: Roadway Improvements to Serve Project Dumpling along MacMillan Park Drive and SC Highway 160 in unincorporated Lancaster County, South Carolina	Owner: Lancaster County	Owner's Contract No.:
Contract:		Engineer's Project No.: 19128-0029

Contractor:

Contractor's Address: (send Certified Mail, Return Receipt Requested):

You are notified that the Contract Times under the above contract will commence to run on _____. On or before that date, you are to start performing your obligations under the Contract Documents. In accordance with Article 4 of the Agreement, the date of Substantial Completion is _____, and the date of readiness for final payment is _____.

Before you may start any Work at the Site, Paragraph 2.01.B of the General Conditions provides that you and Owner must each deliver to the other (with copies to Engineer and other identified additional insured and loss payees) certificates of insurance which each is required to purchase and maintain in accordance with the Contract Documents.

Also, before you start any work at the site, you must: notify the Engineer and Owner.

	Lancaster County
Contractor	Owner
by:	Given by:
Authorized Signature	Authorized Signature
Title	Title
Date	Date

Copy to Engineer

SECTION 00 52 00

CONTRACT

THIS AGREEMENT is by and between Lancaster County

("Owner") and _____

("Contractor") Owner and Contractor hereby agree as follows:

ARTICLE 1 - WORK

1.01 Contractor shall complete all Work as specified or indicated in the Contract Documents. The Work is generally described as follows:

Roadway Improvements to Serve Project Dumpling along MacMillan Park Drive and SC Highway 160 in unincorporated Lancaster County, South Carolina

ARTICLE 2 - THE PROJECT

2.01 The Project for which the Work under the Contract Documents may be the whole or only a part is generally described as follows:

Roadway Improvements to Serve Project Dumpling along MacMillan Park Drive and SC Highway 160 in unincorporated Lancaster County, South Carolina

ARTICLE 3 - ENGINEER

3.01 The Project has been designed by: Alliance Consulting Engineers, Inc., who is to act as Owner's representative, assume all duties and responsibilities and have the rights and authority assigned to Engineer in the Contract Documents in connection with the completion of the Work in accordance with the Contract Documents.

ARTICLE 4 – CONTRACT TIMES

4.01 Time of the Essence

A. All time limits for Milestones for final payment as stated in the Contract Documents are of the essence of the Contract.

4.02 Days to Achieve Substantial Completion and Final Payment

A. Contractor agrees that the work: Roadway Improvements to Serve Project Dumpling along MacMillan Park Drive and SC Highway 160 in unincorporated Lancaster County, South Carolina is to be completed within one hundred eighty (180) calendar days for the scope of work after Notice to Proceed has been issued.

4.03 Liquidated Damages

A. Contractor and Owner recognize that time is of the essence as stated in Paragraph 4.01 above and that Owner will suffer financial loss if the Work is not completed within the times specified in Paragraph 4.02 above, plus any extensions thereof allowed in accordance with Article 12 of the General Conditions. The parties also recognize the delays, expense, and difficulties involved in proving in a legal or arbitration proceeding the actual loss suffered by Owner if the Work is not completed on time. Accordingly, instead of requiring any such proof, Owner and Contractor agree that as liquidated damages for delay (but not as a

penalty), Contractor shall pay Owner $1,500 for each day that expires after the time specified in Paragraph 4.02 above for Substantial Completion until the Work is substantially complete. After Substantial Completion, if Contractor shall neglect, refuse, or fail to complete the remaining Work within the Contract Time or any proper extension thereof granted by Owner, Contractor shall pay Owner $1,500 for each day that expires after the time specified in Paragraph 4.02 above for completion and readiness for final payment until the Work is completed and ready for final payment.

ARTICLE 5 - CONTRACT PRICE

5.01 Owner shall pay Contractor for completion of the Work in accordance with the Contract Documents an amount in current funds equal to the sum of the amounts determined pursuant to Paragraphs 5.01.A, and 5.01.B below:

A. All specific cash allowances are included in the above price in accordance with Paragraph 11.02 of the General Conditions.

ARTICLE 6 - PAYMENT PROCEDURES

6.01 Submittal and Processing of Payments

A. Contractor shall submit Applications for Payment in accordance with Article 14 of the General Conditions. Applications for Payment will be processed by Engineer as provided in the General Conditions.

6.02 Progress Payments; Retainage

A. Owner shall make progress payments on account of the Contract Price on the basis of Contractor's Applications for Payment on or about the 25th day of each month during performance of the Work as provided in Paragraphs 6.02.A.1 below. All such payments will be measured by the schedule of values established as provided in Paragraph 2.07.A of the General Conditions (and in the case of Unit Price Work based on the number of units completed) or, in the event there is no schedule of values, as provided in the General Requirements:

1. Prior to Substantial Completion, progress payments will be made in an amount equal to the percentage indicated below but, in each case, less the aggregate of payments previously made and less such amounts as Engineer may determine or Owner may withhold, including but not limited to liquidated damages, in accordance with Paragraph 14.02 of the General Conditions:

a. 90% of Work completed (with the balance being Retainage).

b. 90% of cost of materials and equipment not incorporated in the Work (with the balance being Retainage).

B. Upon Substantial Completion, Owner shall pay an amount sufficient to increase total payments to Contractor to 100% of the Work completed, less such amounts as Engineer shall determine in accordance with Paragraph 14.02.B.5 of the General Conditions and less 100% of Engineer's estimate of the value of Work to be completed or corrected as shown on the tentative list of items to be completed or corrected attached to the certificate of Substantial Completion.

6.03 Final Payment

A. Upon final completion and acceptance of the Work in accordance with Paragraph 14.07 of the General Conditions, Owner shall pay the remainder of the Contract Price as recommended by Engineer as provided in said Paragraph 14.07.

ARTICLE 7 – INTEREST

7.01 All moneys not paid when due as provided in Article 14 of the General Conditions shall bear interest at the rate of 3% percent per annum.

ARTICLE 8 – CONTRACTOR'S REPRESENTATIONS

8.01 In order to induce Owner to enter into this Agreement Contractor makes the following representations:

A. Contractor has examined and carefully studied the Contract Documents and the other related data identified in the Bidding Documents.

B. Contractor has visited the Site and become familiar with and is satisfied as to the general, local, and Site conditions that may affect cost, progress, and performance of the Work.

C. Contractor is familiar with and is satisfied as to all federal, state, and local Laws and Regulations that may affect cost, progress, and performance of the Work.

D. Contractor has carefully studied all: (1) reports of explorations and tests of subsurface conditions at or contiguous to the Site and all drawings of physical conditions relating to existing surface or subsurface structures at the Site (except Underground Facilities), if any, that have been identified in Paragraph SC-4.02 of the Supplementary Conditions as containing reliable "technical data," and (2) reports and drawings of Hazardous Environmental Conditions, if any, at the Site that have been identified in Paragraph SC-4.06 of the Supplementary Conditions as containing reliable "technical data."

E. Contractor has considered the information known to Contractor; information commonly known to contractors doing business in the locality of the Site; information and observations obtained from visits to the Site; the Contract Documents; and the Site-related reports and drawings identified in the Contract Documents, with respect to the effect of such information, observations, and documents on (1) the cost, progress, and performance of the Work; (2) the means, methods, techniques, sequences, and procedures of construction to be employed by Contractor, including any specific means, methods, techniques, sequences, and procedures of construction expressly required by the Contract Documents; and (3) Contractor's safety precautions and programs.

F. Based on the information and observations referred to in Paragraph 8.01.E above, Contractor does not consider that further examinations, investigations, explorations, tests, studies, or data are necessary for the performance of the Work at the Contract Price, within the Contract Times, and in accordance with the other terms and conditions of the Contract Documents.

G. Contractor is aware of the general nature of work to be performed by Owner and others at the Site that relates to the Work as indicated in the Contract Documents.

H. Contractor has given Engineer written notice of all conflicts, errors, ambiguities, or discrepancies that Contractor has discovered in the Contract Documents, and the written resolution thereof by Engineer is acceptable to Contractor.

I. The Contract Documents are generally sufficient to indicate and convey understanding of all terms and conditions for performance and furnishing of the Work.

ARTICLE 9 - CONTRACT DOCUMENTS

9.01 Contents

A. The Contract Documents consist of the following:

1. This Agreement - Section 00 52 00 (pages 1 to 7, inclusive).

2. Performance Bond - Section 00 61 13.13 (pages 1 to 3, inclusive).

3. Payment Bond - Section 00 61 13.16 (pages 1 to 3, inclusive).

4. Other bonds (N/A).

5. General Conditions - Section 00 70 00 (pages 1 to 70, inclusive).

6. Supplemental Conditions - Section 00 73 00 (pages 1 to 9, inclusive).

7. Specifications as listed in the Table of Contents of the Project Manual. The following Sections included within Division 0 are considered part of the "Technical Specifications."

8. Drawings consisting of **32** sheets with each sheet bearing the following general title: **Roadway Improvements to Serve Project Dumpling along MacMillan Park Drive and SC Highway 160 in unincorporated Lancaster County, South Carolina**

9. Addenda (numbers _____to ____, inclusive).

10. Exhibits to this Agreement (enumerated as follows):

a. Contractor's Bid - Section 00 41 00 (pages 1 to 7, inclusive).

b. Documentation submitted by Contractor prior to Notice of Award as detailed within the Bidder's Submittal Checklist - Section 00 43 93 (pages 1 to 5 , inclusive).

11. The following which may be delivered or issued on or after the Effective Date of the Agreement and are not attached hereto:

a. Notice to Proceed - Section 00 55 00 (pages 1 to 1, inclusive).

b. Work Change Directives.

c. Change Orders.

12. Schedule of Values Form - Section 00 62 73 (pages 1 to _____ , inclusive).

B. The documents listed in Paragraph 9.01.A are attached to this Agreement (except as expressly noted otherwise above).

C. There are no Contract Documents other than those listed above in this Article 9.

D. The Contract Documents may only be amended, modified or supplemented as provided in Paragraph 3.04 of the General Conditions.

ARTICLE 10 - MISCELLANEOUS

10.01 Terms

A. Terms used in this Agreement will have the meanings stated in the General Conditions and the Supplementary Conditions.

10.02 Assignment of Contract

A. No assignment by a party hereto of any rights under or interests in the Contract will be binding on another party hereto without the written consent of the party sought to be bound; and, specifically but without limitation, moneys that may become due and moneys that are due may not be assigned without such consent (except to the extent that the effect of this restriction may be limited by law), and unless specifically stated to the contrary in any written consent to an assignment, no assignment will release or discharge the assignor from any duty or responsibility under the Contract Documents.

10.03 Successors and Assigns

A. Owner and Contractor each binds itself, its partners, successors, assigns, and legal representatives to the other party hereto, its partners, successors, assigns, and legal representatives in respect to all covenants, agreements, and obligations contained in the Contract Documents.

10.04 Severability

A. Any provision or part of the Contract Documents held to be void or unenforceable under any Law or Regulation shall be deemed stricken, and all remaining provisions shall continue to be valid and binding upon Owner and Contractor, who agree that the Contract Documents shall be reformed to replace such stricken provision or part thereof with a valid and enforceable provision that comes as close as possible to expressing the intention of the stricken provision.

10.05 Contractor's Certifications

A. Contractor certifies that it has not engaged in corrupt, fraudulent, collusive, or coercive practices in competing for or in executing the Contract. For the purposes of this Paragraph

1. "corrupt practice" means the offering, giving, receiving, or soliciting of any thing of value likely to influence the action of a public official in the bidding process or in the Contract execution;

2. "fraudulent practice" means an intentional misrepresentation of facts made (a) to influence the bidding process or the execution of the Contract to the detriment of Owner, (b) to establish Bid or Contract prices at artificial non-competitive levels, or (c) to deprive Owner of the benefits of free and open competition;

3. "collusive practice" means a scheme or arrangement between two or more Bidders, with or without the knowledge of Owner, a purpose of which is to establish Bid prices at artificial, non-competitive levels; and

4. "coercive practice" means harming or threatening to harm, directly or indirectly,

persons or their property to influence their participation in the bidding process or affect the execution of the Contract.

IN WITNESS WHEREOF, Owner and Contractor have signed this Agreement. One counterpart each has been delivered to Owner, Contractor, Engineer and provided to the Contractor for his Bonding Agency. All portions of the Contract Documents have been signed or identified by Owner and Contractor or on their behalf.

This Agreement will be effective on _____
(which is the Effective Date of the Agreement).

OWNER:

Lancaster County _____

By: _____

Title: _____

Attest: _____

Title: _____

Address for giving notices:

Lancaster County _____

101 N. Main Street _____

Lancaster, South Carolina 29720 _____

_____

(If Owner is a corporation, attach evidence of authority to sign. If Owner is a public body, attach evidence of authority to sign and resolution or other documents authorizing execution of this Agreement.)

CONTRACTOR

_____

By: _____

Title: _____

If Contractor is a corporation, a Partnership, or a joint venture, attach evidence of authority to sign.)

Attest: _____

Title: _____

Address for giving notices:

_____

_____

_____

_____

License No.: _____

(Where applicable)

Agent for service of process:

_____

SECTION 00 61 13.13

PERFORMANCE BOND

CONTRACTOR *(name and address)*:

SURETY *(name and address of principal place of business)*:

OWNER: Lancaster County
101 N. Main Street
Lancaster, South Carolina 29720

CONSTRUCTION CONTRACT
Effective Date of the Agreement:
Amount:
Description: Roadway Improvements to Serve Project Dumpling along MacMillan Park Drive and SC Highway 160 in unincorporated Lancaster County, South Carolina

BOND
Bond Number:
Date *(not earlier than the Effective Date of the Agreement of the Construction Contract)*:
Amount:
Modifications to this Bond Form: ☐ None ☐ See Paragraph 16

Surety and Contractor, intending to be legally bound hereby, subject to the terms set forth below, do each cause this Performance Bond to be duly executed by an authorized officer, agent, or representative.

CONTRACTOR AS PRINCIPAL

_____ *(seal)*
Contractor's Name and Corporate Seal

By: _____
Signature

_____
Print Name

_____
Title

Attest:_____
Signature

_____
Title

SURETY

_____ *(seal)*
Surety's Name and Corporate Seal

By:_____
Signature *(attach power of attorney)*

_____
Print Name

_____
Title

Attest:_____
Signature

_____
Title

Notes: (1) Provide supplemental execution by any additional parties, such as joint venturers. (2) Any singular reference to Contractor, Surety, Owner, or other party shall be considered plural where applicable.

1. The Contractor and Surety, jointly and severally, bind themselves, their heirs, executors, administrators, successors, and assigns to the Owner for the performance of the Construction Contract, which is incorporated herein by reference.

2. If the Contractor performs the Construction Contract, the Surety and the Contractor shall have no obligation under this Bond, except when applicable to participate in a conference as provided in Paragraph 3.

3. If there is no Owner Default under the Construction Contract, the Surety's obligation under this Bond shall arise after:

3.1 The Owner first provides notice to the Contractor and the Surety that the Owner is considering declaring a Contractor Default. Such notice shall indicate whether the Owner is requesting a conference among the Owner, Contractor, and Surety to discuss the Contractor's performance. If the Owner does not request a conference, the Surety may, within five (5) business days after receipt of the Owner's notice, request such a conference. If the Surety timely requests a conference, the Owner shall attend. Unless the Owner agrees otherwise, any conference requested under this Paragraph 3.1 shall be held within ten (10) business days of the Surety's receipt of the Owner's notice. If the Owner, the Contractor, and the Surety agree, the Contractor shall be allowed a reasonable time to perform the Construction Contract, but such an agreement shall not waive the Owner's right, if any, subsequently to declare a Contractor Default;

3.2 The Owner declares a Contractor Default, terminates the Construction Contract and notifies the Surety; and

3.3 The Owner has agreed to pay the Balance of the Contract Price in accordance with the terms of the Construction Contract to the Surety or to a contractor selected to perform the Construction Contract.

4. Failure on the part of the Owner to comply with the notice requirement in Paragraph 3.1 shall not constitute a failure to comply with a condition precedent to the Surety's obligations, or release the Surety from its obligations, except to the extent the Surety demonstrates actual prejudice.

5. When the Owner has satisfied the conditions of Paragraph 3, the Surety shall promptly and at the Surety's expense take one of the following actions:

5.1 Arrange for the Contractor, with the consent of the Owner, to perform and complete the Construction Contract;

5.2 Undertake to perform and complete the Construction Contract itself, through its agents or independent contractors;

5.3 Obtain bids or negotiated proposals from qualified contractors acceptable to the Owner for a contract for performance and completion of the Construction Contract, arrange for a contract to be prepared for execution by the Owner and a contractor selected with the Owners concurrence, to be secured with performance and payment bonds executed by a qualified surety equivalent to the bonds issued on the Construction Contract, and pay to the Owner the amount of damages as described in Paragraph 7 in excess of the Balance of the Contract Price incurred by the Owner as a result of the Contractor Default; or

5.4 Waive its right to perform and complete, arrange for completion, or obtain a new contractor, and with reasonable promptness under the circumstances:

5.4.1 After investigation, determine the amount for which it may be liable to the Owner and, as soon as practicable after the amount is determined, make payment to the Owner; or

5.4.2 Deny liability in whole or in part and notify the Owner, citing the reasons for denial.

6. If the Surety does not proceed as provided in Paragraph 5 with reasonable promptness, the Surety shall be deemed to be in default on this Bond seven days after receipt of an additional written notice from the Owner to the Surety demanding that the Surety perform its obligations under this Bond, and the Owner shall be entitled to enforce any remedy available to the Owner. If the Surety proceeds as provided in Paragraph 5.4, and the Owner refuses the payment or the Surety has denied liability, in whole or in part, without further notice the Owner shall be entitled to enforce any remedy available to the Owner.

7. If the Surety elects to act under Paragraph 5.1, 5.2, or 5.3, then the responsibilities of the Surety to the Owner shall not be greater than those of the Contractor under the Construction Contract, and the responsibilities of the Owner to the Surety shall not be greater than those of the Owner under the Construction Contract. Subject to the commitment by the Owner to pay the Balance of the Contract Price, the Surety is obligated, without duplication for:

7.1 the responsibilities of the Contractor for correction of defective work and completion of the Construction Contract;

7.2 additional legal, design professional, and delay costs resulting from the Contractor's Default, and resulting from the actions or failure to act of the Surety under Paragraph 5; and

7.3 liquidated damages, or if no liquidated damages are specified in the Construction Contract, actual damages caused by delayed performance or non-performance of the Contractor.

8. If the Surety elects to act under Paragraph 5.1, 5.3, or 5.4, the Surety's liability is limited to the amount of this Bond.

9. The Surety shall not be liable to the Owner or others for obligations of the Contractor that are unrelated to the Construction Contract, and the Balance of the Contract Price shall not be reduced or set off on account of any such unrelated obligations. No right of action shall accrue on this Bond to any person or entity other than the Owner or its heirs, executors, administrators, successors, and assigns.

10. The Surety hereby waives notice of any change, including changes of time, to the Construction Contract or to related subcontracts, purchase orders, and other obligations.

11. Any proceeding, legal or equitable, under this Bond may be instituted in any court of competent jurisdiction in the location in which the work or part of the work is located and shall be instituted within two years after a declaration of Contractor Default or within two years after the Contractor ceased working or within two years after the Surety refuses or fails to perform its obligations under this Bond, whichever occurs first. If the provisions of this paragraph are void or prohibited by law, the minimum periods of limitations available to sureties as a defense in the jurisdiction of the suit shall be applicable.

12. Notice to the Surety, the Owner, or the Contractor shall be mailed or delivered to the address shown on the page on which their signature appears.

13. When this Bond has been furnished to comply with a statutory or other legal requirement in the location where the construction was to be performed, any provision in this Bond conflicting with said statutory or legal requirement shall be deemed deleted herefrom and provisions conforming to such statutory or other legal requirement shall be deemed incorporated herein. When so furnished, the intent is that this Bond shall be construed as a statutory bond and not as a common law bond.

14. Definitions

14.1 Balance of the Contract Price: The total amount payable by the Owner to the Contractor under the Construction Contract after all proper adjustments have been made including allowance for the Contractor for any amounts received or to be received by the Owner in settlement of insurance or other claims for damages to which the Contractor is entitled, reduced by all valid and proper payments made to or on behalf of the Contractor under the Construction Contract.

14.2 Construction Contract: The agreement between the Owner and Contractor identified on the cover page, including all Contract Documents and changes made to the agreement and the Contract Documents.

14.3 Contractor Default: Failure of the Contractor, which has not been remedied or waived, to perform or otherwise to comply with a material term of the Construction Contract.

14.4 Owner Default: Failure of the Owner, which has not been remedied or waived, to pay the Contractor as required under the Construction Contract or to perform and complete or comply with the other material terms of the Construction Contract.

14.5 Contract Documents: All the documents that comprise the agreement between the Owner and Contractor.

15. If this Bond is issued for an agreement between a contractor and subcontractor, the term Contractor in this Bond shall be deemed to be Subcontractor and the term Owner shall be deemed to be Contractor.

16. Modifications to this Bond are as follows:

FOR INFORMATION ONLY – Name, Address and Telephone
Surety Agency or Broker:
Owner's Representative (Engineer): **Alliance Consulting Engineers, Inc., P.O. Box 8147, Columbia, SC 29202-8147, (803) 779-2078**

END OF SECTION

SECTION 00 61 13.16

PAYMENT BOND

CONTRACTOR *(name and address)*:

SURETY *(name and address of principal place of business)*:

OWNER: Lancaster County
101 N. Main Street
Lancaster, South Carolina 29720

CONSTRUCTION CONTRACT
Effective Date of the Agreement:
Amount:
Description: Roadway Improvements to Serve Project Dumpling along MacMillan Park Drive and SC Highway 160 in unincorporated Lancaster County, South Carolina

BOND
Bond Number:
Date *(not earlier than the Effective Date of the Agreement of the Construction Contract)*:
Amount:
Modifications to this Bond Form: ☐ None ☐ See Paragraph 18

Surety and Contractor, intending to be legally bound hereby, subject to the terms set forth below, do each cause this Payment Bond to be duly executed by an authorized officer, agent, or representative.

CONTRACTOR AS PRINCIPAL

_____ *(seal)*
Contractor's Name and Corporate Seal

By: _____
Signature

_____
Print Name

_____
Title

Attest: _____
Signature

_____
Title

SURETY

_____ *(seal)*
Surety's Name and Corporate Seal

By: _____
Signature *(attach power of attorney)*

_____
Print Name

_____
Title

Attest: _____
Signature

_____
Title

Notes: (1) Provide supplemental execution by any additional parties, such as joint venturers. (2) Any singular reference to Contractor, Surety, Owner, or other party shall be considered plural where applicable.

1. The Contractor and Surety, jointly and severally, bind themselves, their heirs, executors, administrators, successors, and assigns to the Owner to pay for labor, materials, and equipment furnished for use in the performance of the Construction Contract, which is incorporated herein by reference, subject to the following terms.

2. If the Contractor promptly makes payment of all sums due to Claimants, and defends, indemnifies, and holds harmless the Owner from claims, demands, liens, or suits by any person or entity seeking payment for labor, materials, or equipment furnished for use in the performance of the Construction Contract, then the Surety and the Contractor shall have no obligation under this Bond.

3. If there is no Owner Default under the Construction Contract, the Surety's obligation to the Owner under this Bond shall arise after the Owner has promptly notified the Contractor and the Surety (at the address described in Paragraph 13) of claims, demands, liens, or suits against the Owner or the Owner's property by any person or entity seeking payment for labor, materials, or equipment furnished for use in the performance of the Construction Contract, and tendered defense of such claims, demands, liens, or suits to the Contractor and the Surety.

4. When the Owner has satisfied the conditions in Paragraph 3, the Surety shall promptly and at the Surety's expense defend, indemnify, and hold harmless the Owner against a duly tendered claim, demand, lien, or suit.

5. The Surety's obligations to a Claimant under this Bond shall arise after the following:

   5.1 Claimants who do not have a direct contract with the Contractor,

      5.1.1 have furnished a written notice of non-payment to the Contractor, stating with substantial accuracy the amount claimed and the name of the party to whom the materials were, or equipment was, furnished or supplied or for whom the labor was done or performed, within ninety (90) days after having last performed labor or last furnished materials or equipment included in the Claim; and

      5.1.2 have sent a Claim to the Surety (at the address described in Paragraph 13).

   5.2 Claimants who are employed by or have a direct contract with the Contractor have sent a Claim to the Surety (at the address described in Paragraph 13).

6. If a notice of non-payment required by Paragraph 5.1.1 is given by the Owner to the Contractor that is sufficient to satisfy a Claimant's obligation to furnish a written notice of non-payment under Paragraph 5.1.1.

7. When a Claimant has satisfied the conditions of Paragraph 5.1 or 5.2, whichever is applicable, the Surety shall promptly and at the Surety's expense take the following actions:

   7.1 Send an answer to the Claimant, with a copy to the Owner, within sixty (60) days after receipt of the Claim, stating the amounts that are undisputed and the basis for challenging any amounts that are disputed; and

   7.2 Pay or arrange for payment of any undisputed amounts.

   7.3 The Surety's failure to discharge its obligations under Paragraph 7.1 or 7.2 shall not be deemed to constitute a waiver of defenses the Surety or Contractor may have or acquire as to a Claim, except as to undisputed amounts for which the Surety and Claimant have reached agreement. If, however, the Surety fails to discharge its obligations under Paragraph 7.1 or 7.2, the Surety shall indemnify the Claimant for the reasonable attorney's fees the Claimant incurs thereafter to recover any sums found to be due and owing to the Claimant.

8. The Surety's total obligation shall not exceed the amount of this Bond, plus the amount of reasonable attorney's fees provided under Paragraph 7.3, and the amount of this Bond shall be credited for any payments made in good faith by the Surety.

9. Amounts owed by the Owner to the Contractor under the Construction Contract shall be used for the performance of the Construction Contract and to satisfy claims, if any, under any construction performance bond. By the Contractor furnishing and the Owner accepting this Bond, they agree that all funds earned by the Contractor in the performance of the Construction Contract are dedicated to satisfy obligations of the Contractor and Surety under this Bond, subject to the Owner's priority to use the funds for the completion of the work.

10. The Surety shall not be liable to the Owner, Claimants, or others for obligations of the Contractor that are unrelated to the Construction Contract. The Owner shall not be liable for the payment of any costs or expenses of any Claimant under this Bond, and shall have under this Bond no obligation to make payments to or give notice on behalf of Claimants, or otherwise have any obligations to Claimants under this Bond.

11. The Surety hereby waives notice of any change, including changes of time, to the Construction Contract or to related subcontracts, purchase orders, and other obligations.

12. No suit or action shall be commenced by a Claimant under this Bond other than in a court of competent jurisdiction in the state in which the project that is the subject of the Construction Contract is located or after the expiration of one year from the date (1) on which the Claimant sent a Claim to the Surety pursuant to Paragraph 5.1.2 or 5.2, or (2) on which the last labor or service was performed by anyone or the last materials or equipment were furnished by anyone under the Construction Contract, whichever of (1) or (2) first occurs. If the provisions of this paragraph are void or prohibited by law, the minimum period of limitation available to sureties as a defense in the jurisdiction of the suit shall be applicable.

13. Notice and Claims to the Surety, the Owner, or the Contractor shall be mailed or delivered to the address shown on the page on which their signature appears. Actual receipt of notice or Claims, however accomplished, shall be sufficient compliance as of the date received.

14. When this Bond has been furnished to comply with a statutory or other legal requirement in the location where the construction was to be performed, any provision in this Bond conflicting with said statutory or legal requirement shall be deemed deleted herefrom and provisions conforming to such statutory or other legal requirement shall be deemed incorporated herein. When so furnished, the intent is that this Bond shall be construed as a statutory bond and not as a common law bond.

15. Upon requests by any person or entity appearing to be a potential beneficiary of this Bond, the Contractor and Owner shall promptly furnish a copy of this Bond or shall permit a copy to be made.

16. **Definitions**

16.1 **Claim:** A written statement by the Claimant including at a minimum:

1. The name of the Claimant;
2. The name of the person for whom the labor was done, or materials or equipment furnished;
3. A copy of the agreement or purchase order pursuant to which labor, materials, or equipment was furnished for use in the performance of the Construction Contract;
4. A brief description of the labor, materials, or equipment furnished;
5. The date on which the Claimant last performed labor or last furnished materials or equipment for use in the performance of the Construction Contract;
6. The total amount earned by the Claimant for labor, materials, or equipment furnished as of the date of the Claim;
7. The total amount of previous payments received by the Claimant; and
8. The total amount due and unpaid to the Claimant for labor, materials, or equipment furnished as of the date of the Claim.

16.2 **Claimant:** An individual or entity having a direct contract with the Contractor or with a subcontractor of the Contractor to furnish labor, materials, or equipment for use in the performance of the Construction Contract. The term Claimant also includes any individual or entity that has rightfully asserted a claim under an applicable mechanic's lien or similar statute against the real property upon which the Project is located. The intent of this Bond shall be to include without limitation in the terms of "labor, materials, or equipment" that part of the water, gas, power, light, heat, oil, gasoline, telephone service, or rental equipment used in the Construction Contract, architectural and engineering services required for performance of the work of the Contractor and the Contractor's subcontractors, and all other items for which a mechanic's lien may be asserted in the jurisdiction where the labor, materials, or equipment were furnished.

16.3 **Construction Contract:** The agreement between the Owner and Contractor identified on the cover page, including all Contract Documents and all changes made to the agreement and the Contract Documents.

16.4 **Owner Default**: Failure of the Owner, which has not been remedied or waived, to pay the Contractor as required under the Construction Contract or to perform and complete or comply with the other material terms of the Construction Contract.

16.5 **Contract Documents:** All the documents that comprise the agreement between the Owner and Contractor.

17. If this Bond is issued for an agreement between a contractor and subcontractor, the term Contractor in this Bond shall be deemed to be Subcontractor and the term Owner shall be deemed to be Contractor.

18. Modifications to this Bond are as follows:

END OF SECTION

SECTION 00 62 76

APPLICATION FOR PAYMENT

Contractor's Application For Payment No. _____

	Application Period:	Application Date:
To (Owner): **Lancaster County**	From (Contractor):	Via (Engineer): **Alliance Consulting Engineers, Inc.**
Project: **Roadway Improvements to serve Project Dumpling along MacMillan Park Drive and SC Highway 160 in unincorporated Lancaster County, South Carolina**	Contract: **Roadway Improvements to serve Project Dumpling along MacMillan Park Drive and SC Highway 160 in unincorporated Lancaster County, South Carolina**	
Owner's Contract No.:	Contractor's Project No.:	Engineer's Project No.: **19128-0029**

APPLICATION FOR PAYMENT

Change Order Summary

Approved Change Orders		
Number	Additions	Deductions
TOTALS		
NET CHANGE BY CHANGE ORDERS		

1. ORIGINAL CONTRACT PRICE ..... $ _____

2. Net change by Change Orders ..... $ _____

3. CURRENT CONTRACT PRICE (Line 1 ± 2) ..... $ _____

4. TOTAL COMPLETED AND STORED TO DATE
(Column F on Progress Estimate) ..... $ _____

5. RETAINAGE:

a. _____ % x $_____ Work Completed ..... $ _____

b. _____ % x $_____ Stored Material ..... $ _____

c. Total Retainage (Line 5a + Line 5b) ..... $ _____

6. AMOUNT ELIGIBLE TO DATE (Line 4 - Line 5c) ..... $ _____

7. LESS PREVIOUS PAYMENTS (Line 6 from prior Application) ..... $ _____

8. AMOUNT DUE THIS APPLICATION ..... $ _____

9. BALANCE TO FINISH, PLUS RETAINAGE
(Column G on Progress Estimate + Line 5 above) ..... $ _____

CONTRACTOR'S CERTIFICATION

The undersigned Contractor certifies that: (1) all previous progress payments received from Owner on account of Work done under the Contract have been applied on account to discharge Contractor's legitimate obligations incurred in connection with Work covered by prior Applications for Payment; (2) title of all Work, materials and equipment incorporated in said Work or otherwise listed in or covered by this Application for Payment will pass to Owner at time of payment free and clear of all Liens, security interests and encumbrances (except such as are covered by a Bond acceptable to Owner indemnifying Owner against any such Liens, security interest or encumbrances); and (3) all Work covered by this Application for Payment is in accordance with the Contract Documents and is not defective.

By:	Date:

Payment of: $_____
(Line 8 or other - attach explanation of other amount)

is recommended by: _____ _____
Ryan T. Ohmer, P.E. (Date)

Payment of: $_____
(Line 8 or other - attach explanation of other amount)

is approved by: _____ _____
Steve Willis, County Administrator (Date)

Progress Estimate

Contractor's Application

For (contract): **Roadway Improvements to serve Project Dumpling along MacMillan Park Drive and SC Highway 160 in unincorporated Lancaster County, South Carolina**		Application Number:
Application Period:		Application Date:

A		B	Work Completed		E	F		G
Item			C	D		Total Completed and Stored to Date (C + D + E)	% (F/B)	Balance to Finish (B - F)
Specification Section No.	Description	Scheduled Value	From Previous Application (C + D)	This Period	Materials Presently Stored (not in C or D)			
	Totals							

Progress Estimate

Contractor's Application

For (contract): **Roadway Improvements to serve Project Dumpling along MacMillan Park Drive and SC Highway 160 in unincorporated Lancaster County, South Carolina**											Application Number:
Application Period:											Application Date:
A				B	C	D	E	F			G
Item		Bid Quantity	Unit Price	Bid Value	Estimated Quantity Installed	Value	Materials Presently Stored (not in C)	Total Completed and Stored to Date (D + E)	% (F) B		Balance to Finish (B - F)
Bid Item No.	Description										
	Totals										

Stored Material Summary

Contractor's Application

For (contract): **Roadway Improvements to serve Project Dumpling along MacMillan Park Drive and SC Highway 160 in unincorporated Lancaster County, South Carolina**									Application Number:
Application Period:							Application Date:		
A	B	C	D		E		F		G
Invoice No.	Shop Drawing Transmittal No.	Materials Description	Stored Previously		Stored this Month		Incorporated in Work		Materials Remaining in Storage ($) (D + E - F)
			Date (Month/Year)	Amount ($)	Amount ($)	Subtotal	Date (Month/Year)	Amount ($)	
		Totals							

SECTION 00 63 36

FIELD ORDER

No. _____

Date of Issuance: _____ Effective Date: _____

Project: **: Roadway Improvements to Serve Project Dumpling along MacMillan Park Drive and SC Highway 160 in unincorporated Lancaster County, South Carolina**	Owner: **Lancaster County**	Owner's Contract No.:
Contract: **:**		Date of Contract:
Contractor:		Engineer's Project No.: **19128-0029**

Attention:

You are hereby directed to promptly execute this Field Order issued in accordance with General Conditions Paragraph 9.05A., for minor changes in the Work without changes in Contract Price or Contract Times. If you consider that a change in Contract Price or Contract Times is required, please notify the Engineer immediately and before proceeding with this Work.

Reference: _____ _____

(Specification Section(s)) (Drawing(s) / Detail(s))

Description:

Attachments:

Engineer: Ryan Ohmer, P.E.

Receipt Acknowledged by (Contractor):	Date:

Copy to Owner

SECTION 00 63 49

WORK CHANGE DIRECTIVE

No. _____

Date of Issuance: _____ Effective Date: _____

Project: Roadway Improvements to Serve Project Dumpling along MacMillan Park Drive and SC Highway 160 in unincorporated Lancaster County, South Carolina	Owner: Lancaster County	Owner's Contract No.:
Contract: :		Date of Contract:
Contractor:		Engineer's Project No.: **19128-0029**

You are directed to proceed promptly with the following change(s):

Item No.	Description

Attachments (list documents supporting change):

_____

_____

Purpose for Work Change Directive:

☐ Authorization for Work described herein to proceed on the basis of Cost of the Work due to:

☐ Disagreement on pricing of proposed change.

☐ Necessity to expedite Work described herein prior to agreeing to changes on Contract Price and Contract Time.

Estimated change in Contract Price and Contract Times:

Contract Price $ _____ (increase/decrease) Contract Time _____ (increase/decrease)
days

If the change involves an increase, the estimated amounts are not to be exceeded without further authorization.

Recommended for Approval by Engineer: Ryan Ohmer, P.E.	Date
Authorized for Owner by:	Date
Accepted for Contractor by:	Date

SECTION 00 63 63

CHANGE ORDER

No. _____

Date of Issuance: _____ Effective Date: _____

Project: : **Roadway Improvements to Serve Project Dumpling along MacMillan Park Drive and SC Highway 160 in unincorporated Lancaster County, South Carolina**	Owner: **Lancaster County**	Owner's Contract No.:
Contract: :		Date of Contract:
Contractor:		Engineer's Project No.: **19128-0029**

The Contract Documents are modified as follows upon execution of this Change Order:

Description:

Attachments: (List documents supporting change):

CHANGE IN CONTRACT PRICE:	**CHANGE IN CONTRACT TIMES:**
Original Contract Price: $_____	Original Contract Times: ☐ Working days ☐ Calendar days Substantial completion (days or date): _____ Ready for final payment (days or date): _____
[Increase] [Decrease] from previously approved Change Orders No._____ to No._____: $_____	[Increase] [Decrease] from previously approved Change Orders No._____ to No._____: Substantial completion (days): _____ Ready for final payment (days): _____
Contract Price prior to this Change Order: $_____	Contract Times prior to this Change Order: Substantial completion (days or date): _____ Ready for final payment (days or date): _____
[Increase] [Decrease] of this Change Order: $_____	[Increase] [Decrease] of this Change Order: Substantial completion (days or date): _____ Ready for final payment (days or date): _____
Contract Price incorporating this Change Order: $_____	Contract Times with all approved Change Orders: Substantial completion (days or date): _____ Ready for final payment (days or date): _____

RECOMMENDED:	ACCEPTED:	ACCEPTED:
By: _____	By: _____	By: _____
Engineer: Ryan Ohmer, P.E.	Owner:	Contractor (Authorized Signature)
Date: _____	Date: _____	Date: _____

Approved by Funding Agency (if applicable): _____ Date:

Change Order

Instructions

A. GENERAL INFORMATION

This document was developed to provide a uniform format for handling contract changes that affect Contract Price or Contract Times. Changes that have been initiated by a Work Change Directive must be incorporated into a subsequent Change Order if they affect Price or Times.

Changes that affect Contract Price or Contract Times should be promptly covered by a Change Order. The practice of accumulating Change Orders to reduce the administrative burden may lead to unnecessary disputes.

If Milestones have been listed in the Agreement, any effect of a Change Order thereon should be addressed.

For supplemental instructions and minor changes not involving a change in the Contract Price or Contract Times, a Field Order should be used.

B. COMPLETING THE CHANGE ORDER FORM

Engineer normally initiates the form, including a description of the changes involved and attachments based upon documents and proposals submitted by Contractor, or requests from Owner, or both.

Once Engineer has completed and signed the form, all copies should be sent to Owner or Contractor for approval, depending on whether the Change Order is a true order to the Contractor or the formalization of a negotiated agreement for a previously performed change. After approval by one contracting party, all copies should be sent to the other party for approval. Engineer should make distribution of executed copies after approval by both parties.

If a change only applies to price or to times, cross out the part of the tabulation that does not apply.

END OF SECTION

SECTION 00 65 16

CERTIFICATE OF SUBSTANTIAL COMPLETION

Project: **Roadway Improvements to Serve Project Dumpling Along MacMillan Park Drive and SC Highway 160 in unincorporated Lancaster County, South Carolina**	Owner: **Lancaster County**	Owner's Contract No.:
Contract:		Date of Contract:
Contractor:		Engineer's Project No.: **19128-0029**

This [tentative] [definitive] Certificate of Substantial Completion applies to:

☐ All Work under the Contract Documents: ☐ The following specified portions:

The Work to which this Certificate applies has been inspected by authorized representatives of Owner, Contractor and Engineer, and found to be substantially complete. The Date of Substantial Completion of the Project or portion thereof designated above is hereby declared and is also the date of commencement of applicable warranties required by the Contract Documents, except as stated below.

A [tentative] [revised tentative] [definitive] list of items to be completed or corrected, is attached hereto. This list may not be all-inclusive, and the failure to include any items on such list does not alter the responsibility of the Contractor to complete all Work in accordance with the Contract Documents.

The responsibilities between OWNER and CONTRACTOR for security, operation, safety, maintenance, heat, utilities, insurance and warranties shall be as provided in the Contract Documents except as amended as follows:

☐ Amended Responsibilities ☐ Not Amended

Owner's Amended Responsibilities:

Contractor's Amended Responsibilities:

The following documents are attached to and made part of this Certificate:

This Certificate does not constitute an acceptance of Work not in accordance with the Contract Documents nor is it a release of Contractor's obligation to complete the Work in accordance with the Contract Documents.

Executed by Engineer: Ryan Ohmer P.E. Date

Accepted by Contractor: Date

Accepted by Owner: Date

SECTION 00 65 19.13

CONTRACTOR'S AFFIDAVIT

The State of _____ Date: _____

The County of _____

The City/Town of _____

_____ _____ of _____
(Officer's Name) (Officer's Title) (Contractor's Name)

being duly sworn, deposes and says that _____
(Contractor's Name)

has furnished all labor and material entering into the **Roadway Improvements to Serve Project Dumpling along MacMillan Park Drive and SC Highway 160 in unincorporated Lancaster County, South Carolina.**
(Name and Location of Work)

called for in the Contract Documents dated _____ with **Lancaster County** states further that this officer has full knowledge of all obligations for such labor and materials, which have entered into and become part of that certain project known and designated above, and that this officer further deposes and says that all debts and other obligations for such labor and materials have been fully and completely paid for in good and lawful money of the United States of America and that there are no suits for damages against them proceeding, prospective and/or otherwise, in consequence of their operations on the above said project.

The said _____ will hold the Owners,
(Contractor's Name)
Lancaster County, blameless of any and all mechanic's liens that may be hereafter entered or filed
(Owner's Name)
for record, so as to constitute charge against said premises for work or labor done or materials furnished by them.

IN WITNESS HEREOF, this officer has heretofore put his hand and seal:

_____(Seal)
(Officer's Name)

I, _____, Notary Public in and for the above named County and State do

hereby certify that _____ personally known to me to be the affiant in the
(Officer's Name)
foregoing Affidavit, personally appeared before me this day and, having been duly sworn, deposes and says that the facts set forth in the above Affidavit are true and correct.

WITNESS my hand and seal this ____ day of _____, 20_____

_____ (Seal)

Notary Public for the State of _____ My Commission Expires: _____

SECTION 00 70 00

STANDARD GENERAL CONDITIONS OF THE CONSTRUCTION CONTRACT

TABLE OF CONTENTS

Page

Article 1 – Definitions and Terminology 5

1.01 Defined Terms 5

1.02 Terminology 8

Article 2 – Preliminary Matters 9

2.01 Delivery of Bonds and Evidence of Insurance 9

2.02 Copies of Documents 9

2.03 Before Starting Construction 10

2.04 Preconstruction Conference; Designation of Authorized Representatives 10

2.05 Initial Acceptance of Schedules 10

2.06 Electronic Transmittals 10

Article 3 – Documents: Intent, Requirements, Reuse 11

3.01 Intent 11

3.02 Reference Standards 11

3.03 Reporting and Resolving Discrepancies 11

3.04 Requirements of the Contract Documents 12

3.05 Reuse of Documents 12

Article 4 – Commencement and Progress of the Work 13

4.01 Commencement of Contract Times; Notice to Proceed 13

4.02 Starting the Work 13

4.03 Reference Points 13

4.04 Progress Schedule 13

4.05 Delays in Contractor's Progress 13

Article 5 – Availability of Lands; Subsurface and Physical Conditions; Hazardous Environmental Conditions 14

5.01 Availability of Lands 14

5.02 Use of Site and Other Areas 14

5.03 Subsurface and Physical Conditions 15

5.04 Differing Subsurface or Physical Conditions 16

5.05 Underground Facilities 17

5.06 Hazardous Environmental Conditions at Site 18

Article 6 – Bonds and Insurance 20

6.01 Performance, Payment, and Other Bonds 20

6.02 Insurance—General Provisions 21

6.03 Contractor's Insurance 22

6.04 Owner's Liability Insurance 23
6.05 Property Insurance 24
6.06 Waiver of Rights 25
6.07 Receipt and Application of Property Insurance Proceeds 26
Article 7 – Contractor's Responsibilities 26
7.01 Supervision and Superintendence 26
7.02 Labor; Working Hours 26
7.03 Services, Materials, and Equipment 27
7.04 "Or Equals" 27
7.05 Substitutes 28
7.06 Concerning Subcontractors, Suppliers, and Others 29
7.07 Patent Fees and Royalties 30
7.08 Permits 31
7.09 Taxes 31
7.10 Laws and Regulations 31
7.11 Record Documents 32
7.12 Safety and Protection 32
7.13 Safety Representative 33
7.14 Hazard Communication Programs 33
7.15 Emergencies 33
7.16 Shop Drawings, Samples, and Other Submittals 33
7.17 Contractor's General Warranty and Guarantee 35
7.18 Indemnification 35
7.19 Delegation of Professional Design Services 36
Article 8 – Other Work at the Site 36
8.01 Other Work 36
8.02 Coordination 37
8.03 Legal Relationships 37
Article 9 – Owner's Responsibilities 38
9.01 Communications to Contractor 38
9.02 Replacement of Engineer 38
9.03 Furnish Data 38
9.04 Pay When Due 38
9.05 Lands and Easements; Reports, Tests, and Drawings 38
9.06 Insurance 39
9.07 Change Orders 39
9.08 Inspections, Tests, and Approvals 39
9.09 Limitations on Owner's Responsibilities 39
9.10 Undisclosed Hazardous Environmental Condition 39

9.11 Evidence of Financial Arrangements 39
9.12 Safety Programs 39
Article 10 – Engineer's Status During Construction 39
10.01 Owner's Representative 39
10.02 Visits to Site 39
10.03 Project Representative 40
10.04 Rejecting Defective Work 40
10.05 Shop Drawings, Change Orders and Payments 40
10.06 Determinations for Unit Price Work 40
10.07 Decisions on Requirements of Contract Documents and Acceptability of Work 40
10.08 Limitations on Engineer's Authority and Responsibilities 40
10.09 Compliance with Safety Program 41
Article 11 – Amending the Contract Documents; Changes in the Work 41
11.01 Amending and Supplementing Contract Documents 41
11.02 Owner-Authorized Changes in the Work 41
11.03 Unauthorized Changes in the Work 42
11.04 Change of Contract Price 42
11.05 Change of Contract Times 43
11.06 Change Proposals 43
11.07 Execution of Change Orders 44
11.08 Notification to Surety 44
Article 12 – Claims 44
12.01 Claims 44
Article 13 – Cost of the Work; Allowances; Unit Price Work 45
13.01 Cost of the Work 45
13.02 Allowances 47
13.03 Unit Price Work 48
Article 14 – Tests and Inspections; Correction, Removal or Acceptance of Defective Work 48
14.01 Access to Work 48
14.02 Tests, Inspections, and Approvals 48
14.03 Defective Work 49
14.04 Acceptance of Defective Work 50
14.05 Uncovering Work 50
14.06 Owner May Stop the Work 50
14.07 Owner May Correct Defective Work 50

Article 15 – Payments to Contractor; Set-Offs; Completion; Correction Period 51
15.01 Progress Payments 51
15.02 Contractor's Warranty of Title 54

15.03 Substantial Completion 54
15.04 Partial Use or Occupancy 54
15.05 Final Inspection 55
15.06 Final Payment 55
15.07 Waiver of Claims 56
15.08 Correction Period 56
Article 16 – Suspension of Work and Termination 57
16.01 Owner May Suspend Work 57
16.02 Owner May Terminate for Cause 57
16.03 Owner May Terminate For Convenience 58
16.04 Contractor May Stop Work or Terminate 58
Article 17 – Final Resolution of Disputes 59
17.01 Methods and Procedures 59
Article 18 – Miscellaneous 59
18.01 Giving Notice 59
18.02 Computation of Times 59
18.03 Cumulative Remedies 59
18.04 Limitation of Damages 59
18.05 No Waiver 60
18.06 Survival of Obligations 60
18.07 Controlling Law 60
18.08 Headings 60

ARTICLE 1 – DEFINITIONS AND TERMINOLOGY

1.01 Defined Terms

A. Wherever used in the Bidding Requirements or Contract Documents, a term printed with initial capital letters, including the term's singular and plural forms, will have the meaning indicated in the definitions below. In addition to terms specifically defined, terms with initial capital letters in the Contract Documents include references to identified articles and paragraphs, and the titles of other documents or forms.

1. Addenda—Written or graphic instruments issued prior to the opening of Bids which clarify, correct, or change the Bidding Requirements or the proposed Contract Documents.

2. Agreement—The written instrument, executed by Owner and Contractor, that sets forth the Contract Price and Contract Times, identifies the parties and the Engineer, and designates the specific items that are Contract Documents.

3. Application for Payment—The form acceptable to Engineer which is to be used by Contractor during the course of the Work in requesting progress or final payments and which is to be accompanied by such supporting documentation as is required by the Contract Documents.

4. Bid—The offer of a Bidder submitted on the prescribed form setting forth the prices for the Work to be performed.

5. Bidder—An individual or entity that submits a Bid to Owner.

6. Bidding Documents—The Bidding Requirements, the proposed Contract Documents, and all Addenda.

7. Bidding Requirements—The advertisement or invitation to bid, Instructions to Bidders, Bid Bond or other Bid security, if any, the Bid Form, and the Bid with any attachments.

8. Change Order—A document which is signed by Contractor and Owner and authorizes an addition, deletion, or revision in the Work or an adjustment in the Contract Price or the Contract Times, or other revision to the Contract, issued on or after the Effective Date of the Contract.

9. Change Proposal—A written request by Contractor, duly submitted in compliance with the procedural requirements set forth herein, seeking an adjustment in Contract Price or Contract Times, or both; contesting an initial decision by Engineer concerning the requirements of the Contract Documents or the acceptability of Work under the Contract Documents; challenging a set-off against payments due; or seeking other relief with respect to the terms of the Contract.

10. Claim—(a) A demand or assertion by Owner directly to Contractor, duly submitted in compliance with the procedural requirements set forth herein: seeking an adjustment of Contract Price or Contract Times, or both; contesting an initial decision by Engineer concerning the requirements of the Contract Documents or the acceptability of Work under the Contract Documents; contesting Engineer's decision regarding a Change Proposal; seeking resolution of a contractual issue that Engineer has declined to address; or seeking other relief with respect to the terms of the Contract; or (b) a demand or assertion by Contractor directly to Owner, duly submitted in compliance with the procedural requirements set forth herein, contesting Engineer's decision regarding a Change Proposal; or seeking resolution of a contractual issue that Engineer has declined to address. A demand for money or services by a third party is not a Claim.

11. Constituent of Concern—Asbestos, petroleum, radioactive materials, polychlorinated biphenyls (PCBs), hazardous waste, and any substance, product, waste, or other material of any nature whatsoever that is or becomes listed, regulated, or addressed pursuant to (a) the Comprehensive Environmental Response, Compensation and Liability Act, 42 U.S.C. §§9601 et seq. ("CERCLA"); (b) the Hazardous Materials Transportation

Act, 49 U.S.C. §§5501 et seq.; (c) the Resource Conservation and Recovery Act, 42 U.S.C. §§6901 et seq. ("RCRA"); (d) the Toxic Substances Control Act, 15 U.S.C. §§2601 et seq.; (e) the Clean Water Act, 33 U.S.C. §§1251 et seq.; (f) the Clean Air Act, 42 U.S.C. §§7401 et seq.; or (g) any other federal, state, or local statute, law, rule, regulation, ordinance, resolution, code, order, or decree regulating, relating to, or imposing liability or standards of conduct concerning, any hazardous, toxic, or dangerous waste, substance, or material.

12. Contract—The entire and integrated written contract between the Owner and Contractor concerning the Work.

13. Contract Documents—Those items so designated in the Agreement, and which together comprise the Contract.

14. Contract Price—The money that Owner has agreed to pay Contractor for completion of the Work in accordance with the Contract Documents. .

15. Contract Times—The number of days or the dates by which Contractor shall: (a) achieve Milestones, if any; (b) achieve Substantial Completion; and (c) complete the Work.

16. Contractor—The individual or entity with which Owner has contracted for performance of the Work.

17. Cost of the Work—See Paragraph 13.01 for definition.

18. Drawings—The part of the Contract that graphically shows the scope, extent, and character of the Work to be performed by Contractor.

19. Effective Date of the Contract—The date, indicated in the Agreement, on which the Contract becomes effective.

20. Engineer—The individual or entity named as such in the Agreement.

21. Field Order—A written order issued by Engineer which requires minor changes in the Work but does not change the Contract Price or the Contract Times.

22. Hazardous Environmental Condition—The presence at the Site of Constituents of Concern in such quantities or circumstances that may present a danger to persons or property exposed thereto. The presence at the Site of materials that are necessary for the execution of the Work, or that are to be incorporated in the Work, and that are controlled and contained pursuant to industry practices, Laws and Regulations, and the requirements of the Contract, does not establish a Hazardous Environmental Condition.

23. Laws and Regulations; Laws or Regulations—Any and all applicable laws, statutes, rules, regulations, ordinances, codes, and orders of any and all governmental bodies, agencies, authorities, and courts having jurisdiction.

24. Liens—Charges, security interests, or encumbrances upon Contract-related funds, real property, or personal property.

25. Milestone—A principal event in the performance of the Work that the Contract requires Contractor to achieve by an intermediate completion date or by a time prior to Substantial Completion of all the Work.

26. Notice of Award—The written notice by Owner to a Bidder of Owner's acceptance of the Bid.

27. Notice to Proceed—A written notice by Owner to Contractor fixing the date on which the Contract Times will commence to run and on which Contractor shall start to perform the Work.

28. Owner—The individual or entity with which Contractor has contracted regarding the Work, and which has agreed to pay Contractor for the performance of the Work, pursuant to the terms of the Contract.

29. Progress Schedule—A schedule, prepared and maintained by Contractor, describing the sequence and duration of the activities comprising the Contractor's plan to accomplish the Work within the Contract Times.

30. Project—The total undertaking to be accomplished for Owner by engineers, contractors, and others, including planning, study, design, construction, testing, commissioning, and start-up, and of which the Work to be performed under the Contract Documents is a part.

31. Project Manual—The written documents prepared for, or made available for, procuring and constructing the Work, including but not limited to the Bidding Documents or other construction procurement documents, geotechnical and existing conditions information, the Agreement, bond forms, General Conditions, Supplementary Conditions, and Specifications. The contents of the Project Manual may be bound in one or more volumes.

32. Resident Project Representative—The authorized representative of Engineer assigned to assist Engineer at the Site. As used herein, the term Resident Project Representative or "RPR" includes any assistants or field staff of Resident Project Representative.

33. Samples—Physical examples of materials, equipment, or workmanship that are representative of some portion of the Work and that establish the standards by which such portion of the Work will be judged.

34. Schedule of Submittals—A schedule, prepared and maintained by Contractor, of required submittals and the time requirements for Engineer's review of the submittals and the performance of related construction activities.

35. Schedule of Values—A schedule, prepared and maintained by Contractor, allocating portions of the Contract Price to various portions of the Work and used as the basis for reviewing Contractor's Applications for Payment.

36. Shop Drawings—All drawings, diagrams, illustrations, schedules, and other data or information that are specifically prepared or assembled by or for Contractor and submitted by Contractor to illustrate some portion of the Work. Shop Drawings, whether approved or not, are not Drawings and are not Contract Documents.

37. Site—Lands or areas indicated in the Contract Documents as being furnished by Owner upon which the Work is to be performed, including rights-of-way and easements, and such other lands furnished by Owner which are designated for the use of Contractor.

38. Specifications—The part of the Contract that consists of written requirements for materials, equipment, systems, standards, and workmanship as applied to the Work, and certain administrative requirements and procedural matters applicable to the Work.

39. Subcontractor—An individual or entity having a direct contract with Contractor or with any other Subcontractor for the performance of a part of the Work.

40. Substantial Completion—The time at which the Work (or a specified part thereof) has progressed to the point where, in the opinion of Engineer, the Work (or a specified part thereof) is sufficiently complete, in accordance with the Contract Documents, so that the Work (or a specified part thereof) can be utilized for the purposes for which it is intended. The terms "substantially complete" and "substantially completed" as applied to all or part of the Work refer to Substantial Completion thereof.

41. Successful Bidder—The Bidder whose Bid the Owner accepts, and to which the Owner makes an award of contract, subject to stated conditions.

42. Supplementary Conditions—The part of the Contract that amends or supplements these General Conditions.

43. Supplier—A manufacturer, fabricator, supplier, distributor, materialman, or vendor having a direct contract with Contractor or with any Subcontractor to furnish materials or equipment to be incorporated in the Work by Contractor or a Subcontractor.

44. Technical Data—Those items expressly identified as Technical Data in the Supplementary Conditions, with respect to either (a) subsurface conditions at the Site, or physical conditions relating to existing surface or subsurface structures at the Site (except Underground Facilities) or (b) Hazardous Environmental Conditions at the Site. If no such express identifications of Technical Data have been made with respect to conditions at the Site, then the data contained in boring logs, recorded measurements of subsurface water levels, laboratory test results, and other factual, objective information regarding conditions at the Site that are set forth in any geotechnical or environmental report prepared for the Project and made available to Contractor are hereby defined as Technical Data with respect to conditions at the Site under Paragraphs 5.03, 5.04, and 5.06.

45. Underground Facilities—All underground pipelines, conduits, ducts, cables, wires, manholes, vaults, tanks, tunnels, or other such facilities or attachments, and any encasements containing such facilities, including but not limited to those that convey electricity, gases, steam, liquid petroleum products, telephone or other communications, fiber optic transmissions, cable television, water, wastewater, storm water, other liquids or chemicals, or traffic or other control systems.

46. Unit Price Work—Work to be paid for on the basis of unit prices.

47. Work—The entire construction or the various separately identifiable parts thereof required to be provided under the Contract Documents. Work includes and is the result of performing or providing all labor, services, and documentation necessary to produce such construction; furnishing, installing, and incorporating all materials and equipment into such construction; and may include related services such as testing, start-up, and commissioning, all as required by the Contract Documents.

48. Work Change Directive—A written directive to Contractor issued on or after the Effective Date of the Contract, signed by Owner and recommended by Engineer, ordering an addition, deletion, or revision in the Work.

1.02 Terminology

A. The words and terms discussed in the following paragraphs are not defined but, when used in the Bidding Requirements or Contract Documents, have the indicated meaning.

B. Intent of Certain Terms or Adjectives:

1. The Contract Documents include the terms “as allowed,” “as approved,” “as ordered,” “as directed” or terms of like effect or import to authorize an exercise of professional judgment by Engineer. In addition, the adjectives “reasonable,” “suitable,” “acceptable,” “proper,” “satisfactory,” or adjectives of like effect or import are used to describe an action or determination of Engineer as to the Work. It is intended that such exercise of professional judgment, action, or determination will be solely to evaluate, in general, the Work for compliance with the information in the Contract Documents and with the design concept of the Project as a functioning whole as shown or indicated in the Contract Documents (unless there is a specific statement indicating otherwise). The use of any such term or adjective is not intended to and shall not be effective to assign to Engineer any duty or authority to supervise or direct the performance of the Work, or any duty or authority to undertake responsibility contrary to the provisions of Article 10 or any other provision of the Contract Documents.

C. Day:

1. The word “day” means a calendar day of 24 hours measured from midnight to the next midnight.

D. Defective:

1. The word “defective,” when modifying the word “Work,” refers to Work that is unsatisfactory, faulty, or deficient in that it:

a. does not conform to the Contract Documents; or

b. does not meet the requirements of any applicable inspection, reference standard, test, or approval referred to in the Contract Documents; or

c. has been damaged prior to Engineer's recommendation of final payment (unless responsibility for the protection thereof has been assumed by Owner at Substantial Completion in accordance with Paragraph 15.03 or 15.04).

E. Furnish, Install, Perform, Provide:

1. The word "furnish," when used in connection with services, materials, or equipment, shall mean to supply and deliver said services, materials, or equipment to the Site (or some other specified location) ready for use or installation and in usable or operable condition.

2. The word "install," when used in connection with services, materials, or equipment, shall mean to put into use or place in final position said services, materials, or equipment complete and ready for intended use.

3. The words "perform" or "provide," when used in connection with services, materials, or equipment, shall mean to furnish and install said services, materials, or equipment complete and ready for intended use.

4. If the Contract Documents establish an obligation of Contractor with respect to specific services, materials, or equipment, but do not expressly use any of the four words "furnish," "install," "perform," or "provide," then Contractor shall furnish and install said services, materials, or equipment complete and ready for intended use.

F. Unless stated otherwise in the Contract Documents, words or phrases that have a well-known technical or construction industry or trade meaning are used in the Contract Documents in accordance with such recognized meaning.

ARTICLE 2 – PRELIMINARY MATTERS

2.01 Delivery of Bonds and Evidence of Insurance

A. Bonds: When Contractor delivers the executed counterparts of the Agreement to Owner, Contractor shall also deliver to Owner such bonds as Contractor may be required to furnish.

B. Evidence of Contractor's Insurance: When Contractor delivers the executed counterparts of the Agreement to Owner, Contractor shall also deliver to Owner, with copies to each named insured and additional insured (as identified in the Supplementary Conditions or elsewhere in the Contract), the certificates and other evidence of insurance required to be provided by Contractor in accordance with Article 6.

C. Evidence of Owner's Insurance: After receipt of the executed counterparts of the Agreement and all required bonds and insurance documentation, Owner shall promptly deliver to Contractor, with copies to each named insured and additional insured (as identified in the Supplementary Conditions or otherwise), the certificates and other evidence of insurance required to be provided by Owner under Article 6.

2.02 Copies of Documents

A. Owner shall furnish to Contractor five printed copies of the Contract (including one fully executed counterpart of the Agreement), and one copy in electronic portable document format (PDF). Additional printed copies will be furnished upon request at the cost of reproduction.

B. Owner shall maintain and safeguard at least one original printed record version of the Contract, including Drawings and Specifications signed and sealed by Engineer and other design professionals. Owner shall make such original printed record version of the Contract available to Contractor for review. Owner may delegate the responsibilities under this provision to Engineer.

2.03 Before Starting Construction

A. Preliminary Schedules: Within 10 days after the Effective Date of the Contract (or as otherwise specifically required by the Contract Documents), Contractor shall submit to Engineer for timely review:

1. a preliminary Progress Schedule indicating the times (numbers of days or dates) for starting and completing the various stages of the Work, including any Milestones specified in the Contract;

2. a preliminary Schedule of Submittals; and

3. a preliminary Schedule of Values for all of the Work which includes quantities and prices of items which when added together equal the Contract Price and subdivides the Work into component parts in sufficient detail to serve as the basis for progress payments during performance of the Work. Such prices will include an appropriate amount of overhead and profit applicable to each item of Work.

2.04 Preconstruction Conference; Designation of Authorized Representatives

A. Before any Work at the Site is started, a conference attended by Owner, Contractor, Engineer, and others as appropriate will be held to establish a working understanding among the parties as to the Work and to discuss the schedules referred to in Paragraph 2.03.A, procedures for handling Shop Drawings, Samples, and other submittals, processing Applications for Payment, electronic or digital transmittals, and maintaining required records.

B. At this conference Owner and Contractor each shall designate, in writing, a specific individual to act as its authorized representative with respect to the services and responsibilities under the Contract. Such individuals shall have the authority to transmit and receive information, render decisions relative to the Contract, and otherwise act on behalf of each respective party.

2.05 Initial Acceptance of Schedules

A. At least 10 days before submission of the first Application for Payment a conference, attended by Contractor, Engineer, and others as appropriate, will be held to review for acceptability to Engineer as provided below the schedules submitted in accordance with Paragraph 2.03.A. Contractor shall have an additional 10 days to make corrections and adjustments and to complete and resubmit the schedules. No progress payment shall be made to Contractor until acceptable schedules are submitted to Engineer.

1. The Progress Schedule will be acceptable to Engineer if it provides an orderly progression of the Work to completion within the Contract Times. Such acceptance will not impose on Engineer responsibility for the Progress Schedule, for sequencing, scheduling, or progress of the Work, nor interfere with or relieve Contractor from Contractor's full responsibility therefor.

2. Contractor's Schedule of Submittals will be acceptable to Engineer if it provides a workable arrangement for reviewing and processing the required submittals.

3. Contractor's Schedule of Values will be acceptable to Engineer as to form and substance if it provides a reasonable allocation of the Contract Price to the component parts of the Work.

2.06 Electronic Transmittals

A. Except as otherwise stated elsewhere in the Contract, the Owner, Engineer, and Contractor may transmit, and shall accept, Project-related correspondence, text, data, documents, drawings, information, and graphics, including but not limited to Shop Drawings and other submittals, in electronic media or digital format, either directly, or through access to a secure Project website.

B. If the Contract does not establish protocols for electronic or digital transmittals, then Owner, Engineer, and Contractor shall jointly develop such protocols.

C. When transmitting items in electronic media or digital format, the transmitting party makes no representations as to long term compatibility, usability, or readability of the items resulting from the recipient's use of software application packages, operating systems, or computer hardware differing from those used in the drafting or transmittal of the items, or from those established in applicable transmittal protocols.

ARTICLE 3 – DOCUMENTS: INTENT, REQUIREMENTS, REUSE

3.01 Intent

A. The Contract Documents are complementary; what is required by one is as binding as if required by all.

B. It is the intent of the Contract Documents to describe a functionally complete project (or part thereof) to be constructed in accordance with the Contract Documents.

C. Unless otherwise stated in the Contract Documents, if there is a discrepancy between the electronic or digital versions of the Contract Documents (including any printed copies derived from such electronic or digital versions) and the printed record version, the printed record version shall govern.

D. The Contract supersedes prior negotiations, representations, and agreements, whether written or oral.

E. Engineer will issue clarifications and interpretations of the Contract Documents as provided herein.

3.02 Reference Standards

A. Standards Specifications, Codes, Laws and Regulations

1. Reference in the Contract Documents to standard specifications, manuals, reference standards, or codes of any technical society, organization, or association, or to Laws or Regulations, whether such reference be specific or by implication, shall mean the standard specification, manual, reference standard, code, or Laws or Regulations in effect at the time of opening of Bids (or on the Effective Date of the Contract if there were no Bids), except as may be otherwise specifically stated in the Contract Documents.

2. No provision of any such standard specification, manual, reference standard, or code, or any instruction of a Supplier, shall be effective to change the duties or responsibilities of Owner, Contractor, or Engineer, or any of their subcontractors, consultants, agents, or employees, from those set forth in the part of the Contract Documents prepared by or for Engineer. No such provision or instruction shall be effective to assign to Owner, Engineer, or any of their officers, directors, members, partners, employees, agents, consultants, or subcontractors, any duty or authority to supervise or direct the performance of the Work or any duty or authority to undertake responsibility inconsistent with the provisions of the part of the Contract Documents prepared by or for Engineer.

3.03 Reporting and Resolving Discrepancies

A. Reporting Discrepancies:

1. Contractor's Verification of Figures and Field Measurements: Before undertaking each part of the Work, Contractor shall carefully study the Contract Documents, and check and verify pertinent figures and dimensions therein, particularly with respect to applicable field measurements. Contractor shall promptly report in writing to Engineer any conflict, error, ambiguity, or discrepancy that Contractor discovers, or has actual knowledge of, and shall not proceed with any Work affected thereby until the conflict, error, ambiguity, or discrepancy is resolved, by a clarification or interpretation by Engineer, or by an amendment or supplement to the Contract Documents issued pursuant to Paragraph 11.01.

2. Contractor's Review of Contract Documents: If, before or during the performance of the Work, Contractor discovers any conflict, error, ambiguity, or discrepancy within the

Contract Documents, or between the Contract Documents and (a) any applicable Law or Regulation, (b) actual field conditions, (c) any standard specification, manual, reference standard, or code, or (d) any instruction of any Supplier, then Contractor shall promptly report it to Engineer in writing. Contractor shall not proceed with the Work affected thereby (except in an emergency as required by Paragraph 7.15) until the conflict, error, ambiguity, or discrepancy is resolved, by a clarification or interpretation by Engineer, or by an amendment or supplement to the Contract Documents issued pursuant to Paragraph 11.01.

3. Contractor shall not be liable to Owner or Engineer for failure to report any conflict, error, ambiguity, or discrepancy in the Contract Documents unless Contractor had actual knowledge thereof.

B. Resolving Discrepancies:

1. Except as may be otherwise specifically stated in the Contract Documents, the provisions of the part of the Contract Documents prepared by or for Engineer shall take precedence in resolving any conflict, error, ambiguity, or discrepancy between such provisions of the Contract Documents and:

a. the provisions of any standard specification, manual, reference standard, or code, or the instruction of any Supplier (whether or not specifically incorporated by reference as a Contract Document); or

b. the provisions of any Laws or Regulations applicable to the performance of the Work (unless such an interpretation of the provisions of the Contract Documents would result in violation of such Law or Regulation).

3.04 Requirements of the Contract Documents

A. During the performance of the Work and until final payment, Contractor and Owner shall submit to the Engineer all matters in question concerning the requirements of the Contract Documents (sometimes referred to as requests for information or interpretation—RFIs), or relating to the acceptability of the Work under the Contract Documents, as soon as possible after such matters arise. Engineer will be the initial interpreter of the requirements of the Contract Documents, and judge of the acceptability of the Work thereunder.

B. Engineer will, with reasonable promptness, render a written clarification, interpretation, or decision on the issue submitted, or initiate an amendment or supplement to the Contract Documents. Engineer's written clarification, interpretation, or decision will be final and binding on Contractor, unless it appeals by submitting a Change Proposal, and on Owner, unless it appeals by filing a Claim.

C. If a submitted matter in question concerns terms and conditions of the Contract Documents that do not involve (1) the performance or acceptability of the Work under the Contract Documents, (2) the design (as set forth in the Drawings, Specifications, or otherwise), or (3) other engineering or technical matters, then Engineer will promptly give written notice to Owner and Contractor that Engineer is unable to provide a decision or interpretation. If Owner and Contractor are unable to agree on resolution of such a matter in question, either party may pursue resolution as provided in Article 12.

3.05 Reuse of Documents

A. Contractor and its Subcontractors and Suppliers shall not:

1. have or acquire any title to or ownership rights in any of the Drawings, Specifications, or other documents (or copies of any thereof) prepared by or bearing the seal of Engineer or its consultants, including electronic media editions, or reuse any such Drawings, Specifications, other documents, or copies thereof on extensions of the Project or any other project without written consent of Owner and Engineer and specific written verification or adaptation by Engineer; or

2. have or acquire any title or ownership rights in any other Contract Documents, reuse any such Contract Documents for any purpose without Owner's express written consent, or violate any copyrights pertaining to such Contract Documents.

B. The prohibitions of this Paragraph 3.05 will survive final payment, or termination of the Contract. Nothing herein shall preclude Contractor from retaining copies of the Contract Documents for record purposes.

ARTICLE 4 – COMMENCEMENT AND PROGRESS OF THE WORK

4.01 Commencement of Contract Times; Notice to Proceed

A. The Contract Times will commence to run on the thirtieth day after the Effective Date of the Contract or, if a Notice to Proceed is given, on the day indicated in the Notice to Proceed. A Notice to Proceed may be given at any time within 30 days after the Effective Date of the Contract. In no event will the Contract Times commence to run later than the sixtieth day after the day of Bid opening or the thirtieth day after the Effective Date of the Contract, whichever date is earlier.

4.02 Starting the Work

A. Contractor shall start to perform the Work on the date when the Contract Times commence to run. No Work shall be done at the Site prior to such date.

4.03 Reference Points

A. Owner shall provide engineering surveys to establish reference points for construction which in Engineer's judgment are necessary to enable Contractor to proceed with the Work. Contractor shall be responsible for laying out the Work, shall protect and preserve the established reference points and property monuments, and shall make no changes or relocations without the prior written approval of Owner. Contractor shall report to Engineer whenever any reference point or property monument is lost or destroyed or requires relocation because of necessary changes in grades or locations, and shall be responsible for the accurate replacement or relocation of such reference points or property monuments by professionally qualified personnel.

4.04 Progress Schedule

A. Contractor shall adhere to the Progress Schedule established in accordance with Paragraph 2.05 as it may be adjusted from time to time as provided below.

1. Contractor shall submit to Engineer for acceptance (to the extent indicated in Paragraph 2.05) proposed adjustments in the Progress Schedule that will not result in changing the Contract Times.

2. Proposed adjustments in the Progress Schedule that will change the Contract Times shall be submitted in accordance with the requirements of Article 11.

B. Contractor shall carry on the Work and adhere to the Progress Schedule during all disputes or disagreements with Owner. No Work shall be delayed or postponed pending resolution of any disputes or disagreements, or during any appeal process, except as permitted by Paragraph 16.04, or as Owner and Contractor may otherwise agree in writing.

4.05 Delays in Contractor's Progress

A. If Owner, Engineer, or anyone for whom Owner is responsible, delays, disrupts, or interferes with the performance or progress of the Work, then Contractor shall be entitled to an equitable adjustment in the Contract Times and Contract Price. Contractor's entitlement to an adjustment of the Contract Times is conditioned on such adjustment being essential to Contractor's ability to complete the Work within the Contract Times.

B. Contractor shall not be entitled to an adjustment in Contract Price or Contract Times for delay, disruption, or interference caused by or within the control of Contractor. Delay, disruption, and

interference attributable to and within the control of a Subcontractor or Supplier shall be deemed to be within the control of Contractor.

C. If Contractor's performance or progress is delayed, disrupted, or interfered with by unanticipated causes not the fault of and beyond the control of Owner, Contractor, and those for which they are responsible, then Contractor shall be entitled to an equitable adjustment in Contract Times. Contractor's entitlement to an adjustment of the Contract Times is conditioned on such adjustment being essential to Contractor's ability to complete the Work within the Contract Times. Such an adjustment shall be Contractor's sole and exclusive remedy for the delays, disruption, and interference described in this paragraph. Causes of delay, disruption, or interference that may give rise to an adjustment in Contract Times under this paragraph include but are not limited to the following:

1. severe and unavoidable natural catastrophes such as fires, floods, epidemics, and earthquakes;
2. abnormal weather conditions;
3. acts or failures to act of utility owners (other than those performing other work at or adjacent to the Site by arrangement with the Owner, as contemplated in Article 8); and
4. acts of war or terrorism.

D. Delays, disruption, and interference to the performance or progress of the Work resulting from the existence of a differing subsurface or physical condition, an Underground Facility that was not shown or indicated by the Contract Documents, or not shown or indicated with reasonable accuracy, and those resulting from Hazardous Environmental Conditions, are governed by Article 5.

E. Paragraph 8.03 governs delays, disruption, and interference to the performance or progress of the Work resulting from the performance of certain other work at or adjacent to the Site.

F. Contractor shall not be entitled to an adjustment in Contract Price or Contract Times for any delay, disruption, or interference if such delay is concurrent with a delay, disruption, or interference caused by or within the control of Contractor.

G. Contractor must submit any Change Proposal seeking an adjustment in Contract Price or Contract Times under this paragraph within 30 days of the commencement of the delaying, disrupting, or interfering event.

ARTICLE 5 – AVAILABILITY OF LANDS; SUBSURFACE AND PHYSICAL CONDITIONS; HAZARDOUS ENVIRONMENTAL CONDITIONS

5.01 Availability of Lands

A. Owner shall furnish the Site. Owner shall notify Contractor of any encumbrances or restrictions not of general application but specifically related to use of the Site with which Contractor must comply in performing the Work.

B. Upon reasonable written request, Owner shall furnish Contractor with a current statement of record legal title and legal description of the lands upon which permanent improvements are to be made and Owner's interest therein as necessary for giving notice of or filing a mechanic's or construction lien against such lands in accordance with applicable Laws and Regulations.

C. Contractor shall provide for all additional lands and access thereto that may be required for temporary construction facilities or storage of materials and equipment.

5.02 Use of Site and Other Areas

A. Limitation on Use of Site and Other Areas:

1. Contractor shall confine construction equipment, temporary construction facilities, the storage of materials and equipment, and the operations of workers to the Site, adjacent areas that Contractor has arranged to use through construction easements or otherwise,

and other adjacent areas permitted by Laws and Regulations, and shall not unreasonably encumber the Site and such other adjacent areas with construction equipment or other materials or equipment. Contractor shall assume full responsibility for (a) damage to the Site; (b) damage to any such other adjacent areas used for Contractor's operations; (c) damage to any other adjacent land or areas; and (d) for injuries and losses sustained by the owners or occupants of any such land or areas; provided that such damage or injuries result from the performance of the Work or from other actions or conduct of the Contractor or those for which Contractor is responsible.

2. If a damage or injury claim is made by the owner or occupant of any such land or area because of the performance of the Work, or because of other actions or conduct of the Contractor or those for which Contractor is responsible, Contractor shall (a) take immediate corrective or remedial action as required by Paragraph 7.12, or otherwise; (b) promptly attempt to settle the claim as to all parties through negotiations with such owner or occupant, or otherwise resolve the claim by arbitration or other dispute resolution proceeding, or at law; and (c) to the fullest extent permitted by Laws and Regulations, indemnify and hold harmless Owner and Engineer, and the officers, directors, members, partners, employees, agents, consultants and subcontractors of each and any of them from and against any such claim, and against all costs, losses, and damages (including but not limited to all fees and charges of engineers, architects, attorneys, and other professionals and all court or arbitration or other dispute resolution costs) arising out of or relating to any claim or action, legal or equitable, brought by any such owner or occupant against Owner, Engineer, or any other party indemnified hereunder to the extent caused directly or indirectly, in whole or in part by, or based upon, Contractor's performance of the Work, or because of other actions or conduct of the Contractor or those for which Contractor is responsible.

B. Removal of Debris During Performance of the Work: During the progress of the Work the Contractor shall keep the Site and other adjacent areas free from accumulations of waste materials, rubbish, and other debris. Removal and disposal of such waste materials, rubbish, and other debris shall conform to applicable Laws and Regulations.

C. Cleaning: Prior to Substantial Completion of the Work Contractor shall clean the Site and the Work and make it ready for utilization by Owner. At the completion of the Work Contractor shall remove from the Site and adjacent areas all tools, appliances, construction equipment and machinery, and surplus materials and shall restore to original condition all property not designated for alteration by the Contract Documents.

D. Loading of Structures: Contractor shall not load nor permit any part of any structure to be loaded in any manner that will endanger the structure, nor shall Contractor subject any part of the Work or adjacent structures or land to stresses or pressures that will endanger them.

5.03 Subsurface and Physical Conditions

A. Reports and Drawings: The Supplementary Conditions identify:

1. those reports known to Owner of explorations and tests of subsurface conditions at or adjacent to the Site;

2. those drawings known to Owner of physical conditions relating to existing surface or subsurface structures at the Site (except Underground Facilities); and

3. Technical Data contained in such reports and drawings.

B. Reliance by Contractor on Technical Data Authorized: Contractor may rely upon the accuracy of the Technical Data expressly identified in the Supplementary Conditions with respect to such reports and drawings, but such reports and drawings are not Contract Documents. If no such express identification has been made, then Contractor may rely upon the accuracy of the Technical Data (as defined in Article 1) contained in any geotechnical or environmental report prepared for the Project and made available to Contractor. Except for such reliance on Technical Data, Contractor may not rely upon or make any claim against Owner or Engineer, or any of their officers, directors, members, partners, employees, agents, consultants, or subcontractors, with respect to:

1. the completeness of such reports and drawings for Contractor's purposes, including, but not limited to, any aspects of the means, methods, techniques, sequences, and procedures of construction to be employed by Contractor, and safety precautions and programs incident thereto; or

2. other data, interpretations, opinions, and information contained in such reports or shown or indicated in such drawings; or

3. any Contractor interpretation of or conclusion drawn from any Technical Data or any such other data, interpretations, opinions, or information.

5.04 Differing Subsurface or Physical Conditions

A. Notice by Contractor: If Contractor believes that any subsurface or physical condition that is uncovered or revealed at the Site either:

1. is of such a nature as to establish that any Technical Data on which Contractor is entitled to rely as provided in Paragraph 5.03 is materially inaccurate; or

2. is of such a nature as to require a change in the Drawings or Specifications; or

3. differs materially from that shown or indicated in the Contract Documents; or

4. is of an unusual nature, and differs materially from conditions ordinarily encountered and generally recognized as inherent in work of the character provided for in the Contract Documents;

then Contractor shall, promptly after becoming aware thereof and before further disturbing the subsurface or physical conditions or performing any Work in connection therewith (except in an emergency as required by Paragraph 7.15), notify Owner and Engineer in writing about such condition. Contractor shall not further disturb such condition or perform any Work in connection therewith (except with respect to an emergency) until receipt of a written statement permitting Contractor to do so.

B. Engineer's Review: After receipt of written notice as required by the preceding paragraph, Engineer will promptly review the subsurface or physical condition in question; determine the necessity of Owner's obtaining additional exploration or tests with respect to the condition; conclude whether the condition falls within any one or more of the differing site condition categories in Paragraph 5.04.A above; obtain any pertinent cost or schedule information from Contractor; prepare recommendations to Owner regarding the Contractor's resumption of Work in connection with the subsurface or physical condition in question and the need for any change in the Drawings or Specifications; and advise Owner in writing of Engineer's findings, conclusions, and recommendations.

C. Owner's Statement to Contractor Regarding Site Condition: After receipt of Engineer's written findings, conclusions, and recommendations, Owner shall issue a written statement to Contractor (with a copy to Engineer) regarding the subsurface or physical condition in question, addressing the resumption of Work in connection with such condition, indicating whether any change in the Drawings or Specifications will be made, and adopting or rejecting Engineer's written findings, conclusions, and recommendations, in whole or in part.

D. Possible Price and Times Adjustments:

1. Contractor shall be entitled to an equitable adjustment in Contract Price or Contract Times, or both, to the extent that the existence of a differing subsurface or physical condition, or any related delay, disruption, or interference, causes an increase or decrease in Contractor's cost of, or time required for, performance of the Work; subject, however, to the following:

a. such condition must fall within any one or more of the categories described in Paragraph 5.04.A;

b. with respect to Work that is paid for on a unit price basis, any adjustment in Contract Price will be subject to the provisions of Paragraph 13.03; and,

c. Contractor's entitlement to an adjustment of the Contract Times is conditioned on such adjustment being essential to Contractor's ability to complete the Work within the Contract Times.

2. Contractor shall not be entitled to any adjustment in the Contract Price or Contract Times with respect to a subsurface or physical condition if:

a. Contractor knew of the existence of such condition at the time Contractor made a commitment to Owner with respect to Contract Price and Contract Times by the submission of a Bid or becoming bound under a negotiated contract, or otherwise; or

b. the existence of such condition reasonably could have been discovered or revealed as a result of any examination, investigation, exploration, test, or study of the Site and contiguous areas expressly required by the Bidding Requirements or Contract Documents to be conducted by or for Contractor prior to Contractor's making such commitment; or

c. Contractor failed to give the written notice as required by Paragraph 5.04.A.

3. If Owner and Contractor agree regarding Contractor's entitlement to and the amount or extent of any adjustment in the Contract Price or Contract Times, or both, then any such adjustment shall be set forth in a Change Order.

4. Contractor may submit a Change Proposal regarding its entitlement to or the amount or extent of any adjustment in the Contract Price or Contract Times, or both, no later than 30 days after Owner's issuance of the Owner's written statement to Contractor regarding the subsurface or physical condition in question.

5.05 Underground Facilities

A. Contractor's Responsibilities: The information and data shown or indicated in the Contract Documents with respect to existing Underground Facilities at or adjacent to the Site is based on information and data furnished to Owner or Engineer by the owners of such Underground Facilities, including Owner, or by others. Unless it is otherwise expressly provided in the Supplementary Conditions:

1. Owner and Engineer do not warrant or guarantee the accuracy or completeness of any such information or data provided by others; and

2. the cost of all of the following will be included in the Contract Price, and Contractor shall have full responsibility for:

a. reviewing and checking all information and data regarding existing Underground Facilities at the Site;

b. locating all Underground Facilities shown or indicated in the Contract Documents as being at the Site;

c. coordination of the Work with the owners (including Owner) of such Underground Facilities, during construction; and

d. the safety and protection of all existing Underground Facilities at the Site, and repairing any damage thereto resulting from the Work.

B. Notice by Contractor: If Contractor believes that an Underground Facility that is uncovered or revealed at the Site was not shown or indicated in the Contract Documents, or was not shown or indicated with reasonable accuracy, then Contractor shall, promptly after becoming aware thereof and before further disturbing conditions affected thereby or performing any Work in connection therewith (except in an emergency as required by Paragraph 7.15), identify the owner of such Underground Facility and give written notice to that owner and to Owner and Engineer.

C. Engineer's Review: Engineer will promptly review the Underground Facility and conclude whether such Underground Facility was not shown or indicated in the Contract Documents, or

was not shown or indicated with reasonable accuracy; obtain any pertinent cost or schedule information from Contractor; prepare recommendations to Owner regarding the Contractor's resumption of Work in connection with the Underground Facility in question; determine the extent, if any, to which a change is required in the Drawings or Specifications to reflect and document the consequences of the existence or location of the Underground Facility; and advise Owner in writing of Engineer's findings, conclusions, and recommendations. During such time, Contractor shall be responsible for the safety and protection of such Underground Facility.

D. Owner's Statement to Contractor Regarding Underground Facility: After receipt of Engineer's written findings, conclusions, and recommendations, Owner shall issue a written statement to Contractor (with a copy to Engineer) regarding the Underground Facility in question, addressing the resumption of Work in connection with such Underground Facility, indicating whether any change in the Drawings or Specifications will be made, and adopting or rejecting Engineer's written findings, conclusions, and recommendations in whole or in part.

E. Possible Price and Times Adjustments:

1. Contractor shall be entitled to an equitable adjustment in the Contract Price or Contract Times, or both, to the extent that any existing Underground Facility at the Site that was not shown or indicated in the Contract Documents, or was not shown or indicated with reasonable accuracy, or any related delay, disruption, or interference, causes an increase or decrease in Contractor's cost of, or time required for, performance of the Work; subject, however, to the following:

a. Contractor did not know of and could not reasonably have been expected to be aware of or to have anticipated the existence or actual location of the Underground Facility in question;

b. With respect to Work that is paid for on a unit price basis, any adjustment in Contract Price will be subject to the provisions of Paragraph 13.03;

c. Contractor's entitlement to an adjustment of the Contract Times is conditioned on such adjustment being essential to Contractor's ability to complete the Work within the Contract Times; and

d. Contractor gave the notice required in Paragraph 5.05.B.

2. If Owner and Contractor agree regarding Contractor's entitlement to and the amount or extent of any adjustment in the Contract Price or Contract Times, or both, then any such adjustment shall be set forth in a Change Order.

3. Contractor may submit a Change Proposal regarding its entitlement to or the amount or extent of any adjustment in the Contract Price or Contract Times, or both, no later than 30 days after Owner's issuance of the Owner's written statement to Contractor regarding the Underground Facility in question.

5.06 Hazardous Environmental Conditions at Site

A. Reports and Drawings: The Supplementary Conditions identify:

1. those reports and drawings known to Owner relating to Hazardous Environmental Conditions that have been identified at or adjacent to the Site; and

2. Technical Data contained in such reports and drawings.

B. Reliance by Contractor on Technical Data Authorized: Contractor may rely upon the accuracy of the Technical Data expressly identified in the Supplementary Conditions with respect to such reports and drawings, but such reports and drawings are not Contract Documents. If no such express identification has been made, then Contractor may rely on the accuracy of the Technical Data (as defined in Article 1) contained in any geotechnical or environmental report prepared for the Project and made available to Contractor. Except for such reliance on Technical Data, Contractor may not rely upon or make any claim against Owner or Engineer,

or any of their officers, directors, members, partners, employees, agents, consultants, or subcontractors with respect to:

1. the completeness of such reports and drawings for Contractor's purposes, including, but not limited to, any aspects of the means, methods, techniques, sequences and procedures of construction to be employed by Contractor and safety precautions and programs incident thereto; or

2. other data, interpretations, opinions and information contained in such reports or shown or indicated in such drawings; or

3. any Contractor interpretation of or conclusion drawn from any Technical Data or any such other data, interpretations, opinions or information.

C. Contractor shall not be responsible for removing or remediating any Hazardous Environmental Condition encountered, uncovered, or revealed at the Site unless such removal or remediation is expressly identified in the Contract Documents to be within the scope of the Work.

D. Contractor shall be responsible for controlling, containing, and duly removing all Constituents of Concern brought to the Site by Contractor, Subcontractors, Suppliers, or anyone else for whom Contractor is responsible, and for any associated costs; and for the costs of removing and remediating any Hazardous Environmental Condition created by the presence of any such Constituents of Concern.

E. If Contractor encounters, uncovers, or reveals a Hazardous Environmental Condition whose removal or remediation is not expressly identified in the Contract Documents as being within the scope of the Work, or if Contractor or anyone for whom Contractor is responsible creates a Hazardous Environmental Condition, then Contractor shall immediately: (1) secure or otherwise isolate such condition; (2) stop all Work in connection with such condition and in any area affected thereby (except in an emergency as required by Paragraph 7.15); and (3) notify Owner and Engineer (and promptly thereafter confirm such notice in writing). Owner shall promptly consult with Engineer concerning the necessity for Owner to retain a qualified expert to evaluate such condition or take corrective action, if any. Promptly after consulting with Engineer, Owner shall take such actions as are necessary to permit Owner to timely obtain required permits and provide Contractor the written notice required by Paragraph 5.06.F. If Contractor or anyone for whom Contractor is responsible created the Hazardous Environmental Condition in question, then Owner may remove and remediate the Hazardous Environmental Condition, and impose a set-off against payments to account for the associated costs.

F. Contractor shall not resume Work in connection with such Hazardous Environmental Condition or in any affected area until after Owner has obtained any required permits related thereto, and delivered written notice to Contractor either (1) specifying that such condition and any affected area is or has been rendered safe for the resumption of Work, or (2) specifying any special conditions under which such Work may be resumed safely.

G. If Owner and Contractor cannot agree as to entitlement to or on the amount or extent, if any, of any adjustment in Contract Price or Contract Times, or both, as a result of such Work stoppage or such special conditions under which Work is agreed to be resumed by Contractor, then within 30 days of Owner's written notice regarding the resumption of Work, Contractor may submit a Change Proposal, or Owner may impose a set-off.

H. If after receipt of such written notice Contractor does not agree to resume such Work based on a reasonable belief it is unsafe, or does not agree to resume such Work under such special conditions, then Owner may order the portion of the Work that is in the area affected by such condition to be deleted from the Work, following the contractual change procedures in Article 11. Owner may have such deleted portion of the Work performed by Owner's own forces or others in accordance with Article 8.

I. To the fullest extent permitted by Laws and Regulations, Owner shall indemnify and hold harmless Contractor, Subcontractors, and Engineer, and the officers, directors, members, partners, employees, agents, consultants, and subcontractors of each and any of them from and against all claims, costs, losses, and damages (including but not limited to all fees and

charges of engineers, architects, attorneys, and other professionals and all court or arbitration or other dispute resolution costs) arising out of or relating to a Hazardous Environmental Condition, provided that such Hazardous Environmental Condition (1) was not shown or indicated in the Drawings, Specifications, or other Contract Documents, identified as Technical Data entitled to limited reliance pursuant to Paragraph 5.06.B, or identified in the Contract Documents to be included within the scope of the Work, and (2) was not created by Contractor or by anyone for whom Contractor is responsible. Nothing in this Paragraph 5.06.H shall obligate Owner to indemnify any individual or entity from and against the consequences of that individual's or entity's own negligence.

J. To the fullest extent permitted by Laws and Regulations, Contractor shall indemnify and hold harmless Owner and Engineer, and the officers, directors, members, partners, employees, agents, consultants, and subcontractors of each and any of them from and against all claims, costs, losses, and damages (including but not limited to all fees and charges of engineers, architects, attorneys, and other professionals and all court or arbitration or other dispute resolution costs) arising out of or relating to the failure to control, contain, or remove a Constituent of Concern brought to the Site by Contractor or by anyone for whom Contractor is responsible, or to a Hazardous Environmental Condition created by Contractor or by anyone for whom Contractor is responsible. Nothing in this Paragraph 5.06.J shall obligate Contractor to indemnify any individual or entity from and against the consequences of that individual's or entity's own negligence.

K. The provisions of Paragraphs 5.03, 5.04, and 5.05 do not apply to the presence of Constituents of Concern or to a Hazardous Environmental Condition uncovered or revealed at the Site.

ARTICLE 6 – BONDS AND INSURANCE

6.01 Performance, Payment, and Other Bonds

A. Contractor shall furnish a performance bond and a payment bond, each in an amount at least equal to the Contract Price, as security for the faithful performance and payment of all of Contractor's obligations under the Contract. These bonds shall remain in effect until one year after the date when final payment becomes due or until completion of the correction period specified in Paragraph 15.08, whichever is later, except as provided otherwise by Laws or Regulations, the Supplementary Conditions, or other specific provisions of the Contract. Contractor shall also furnish such other bonds as are required by the Supplementary Conditions or other specific provisions of the Contract.

B. All bonds shall be in the form prescribed by the Contract except as provided otherwise by Laws or Regulations, and shall be executed by such sureties as are named in "Companies Holding Certificates of Authority as Acceptable Sureties on Federal Bonds and as Acceptable Reinsuring Companies" as published in Circular 570 (as amended and supplemented) by the Financial Management Service, Surety Bond Branch, U.S. Department of the Treasury. A bond signed by an agent or attorney-in-fact must be accompanied by a certified copy of that individual's authority to bind the surety. The evidence of authority shall show that it is effective on the date the agent or attorney-in-fact signed the accompanying bond.

C. Contractor shall obtain the required bonds from surety companies that are duly licensed or authorized in the jurisdiction in which the Project is located to issue bonds in the required amounts.

D. If the surety on a bond furnished by Contractor is declared bankrupt or becomes insolvent, or its right to do business is terminated in any state or jurisdiction where any part of the Project is located, or the surety ceases to meet the requirements above, then Contractor shall promptly notify Owner and Engineer and shall, within 20 days after the event giving rise to such notification, provide another bond and surety, both of which shall comply with the bond and surety requirements above.

E. If Contractor has failed to obtain a required bond, Owner may exclude the Contractor from the Site and exercise Owner's termination rights under Article 16.

F. Upon request, Owner shall provide a copy of the payment bond to any Subcontractor, Supplier, or other person or entity claiming to have furnished labor or materials used in the performance of the Work.

6.02 Insurance—General Provisions

A. Owner and Contractor shall obtain and maintain insurance as required in this Article and in the Supplementary Conditions.

B. All insurance required by the Contract to be purchased and maintained by Owner or Contractor shall be obtained from insurance companies that are duly licensed or authorized, in the state or jurisdiction in which the Project is located, to issue insurance policies for the required limits and coverages. Unless a different standard is indicated in the Supplementary Conditions, all companies that provide insurance policies required under this Contract shall have an A.M. Best rating of A-VII or better.

C. Contractor shall deliver to Owner, with copies to each named insured and additional insured (as identified in this Article, in the Supplementary Conditions, or elsewhere in the Contract), certificates of insurance establishing that Contractor has obtained and is maintaining the policies, coverages, and endorsements required by the Contract. Upon request by Owner or any other insured, Contractor shall also furnish other evidence of such required insurance, including but not limited to copies of policies and endorsements, and documentation of applicable self-insured retentions and deductibles. Contractor may block out (redact) any confidential premium or pricing information contained in any policy or endorsement furnished under this provision.

D. Owner shall deliver to Contractor, with copies to each named insured and additional insured (as identified in this Article, the Supplementary Conditions, or elsewhere in the Contract), certificates of insurance establishing that Owner has obtained and is maintaining the policies, coverages, and endorsements required of Owner by the Contract (if any). Upon request by Contractor or any other insured, Owner shall also provide other evidence of such required insurance (if any), including but not limited to copies of policies and endorsements, and documentation of applicable self-insured retentions and deductibles. Owner may block out (redact) any confidential premium or pricing information contained in any policy or endorsement furnished under this provision.

E. Failure of Owner or Contractor to demand such certificates or other evidence of the other party's full compliance with these insurance requirements, or failure of Owner or Contractor to identify a deficiency in compliance from the evidence provided, shall not be construed as a waiver of the other party's obligation to obtain and maintain such insurance.

F. If either party does not purchase or maintain all of the insurance required of such party by the Contract, such party shall notify the other party in writing of such failure to purchase prior to the start of the Work, or of such failure to maintain prior to any change in the required coverage.

G. If Contractor has failed to obtain and maintain required insurance, Owner may exclude the Contractor from the Site, impose an appropriate set-off against payment, and exercise Owner's termination rights under Article 16.

H. Without prejudice to any other right or remedy, if a party has failed to obtain required insurance, the other party may elect to obtain equivalent insurance to protect such other party's interests at the expense of the party who was required to provide such coverage, and the Contract Price shall be adjusted accordingly.

I. Owner does not represent that insurance coverage and limits established in this Contract necessarily will be adequate to protect Contractor or Contractor's interests.

J. The insurance and insurance limits required herein shall not be deemed as a limitation on Contractor's liability under the indemnities granted to Owner and other individuals and entities in the Contract.

6.03 Contractor's Insurance

A. Workers' Compensation: Contractor shall purchase and maintain workers' compensation and employer's liability insurance for:

1. claims under workers' compensation, disability benefits, and other similar employee benefit acts.

2. United States Longshoreman and Harbor Workers' Compensation Act and Jones Act coverage (if applicable).

3. claims for damages because of bodily injury, occupational sickness or disease, or death of Contractor's employees (by stop-gap endorsement in monopolist worker's compensation states).

4. Foreign voluntary worker compensation (if applicable).

B. Commercial General Liability—Claims Covered: Contractor shall purchase and maintain commercial general liability insurance, covering all operations by or on behalf of Contractor, on an occurrence basis, against:

1. claims for damages because of bodily injury, sickness or disease, or death of any person other than Contractor's employees.

2. claims for damages insured by reasonably available personal injury liability coverage.

3. claims for damages, other than to the Work itself, because of injury to or destruction of tangible property wherever located, including loss of use resulting therefrom.

C. Commercial General Liability—Form and Content: Contractor's commercial liability policy shall be written on a 1996 (or later) ISO commercial general liability form (occurrence form) and include the following coverages and endorsements:

1. Products and completed operations coverage:

a. Such insurance shall be maintained for three years after final payment.

b. Contractor shall furnish Owner and each other additional insured (as identified in the Supplementary Conditions or elsewhere in the Contract) evidence of continuation of such insurance at final payment and three years thereafter.

2. Blanket contractual liability coverage, to the extent permitted by law, including but not limited to coverage of Contractor's contractual indemnity obligations in Paragraph 7.18.

3. Broad form property damage coverage.

4. Severability of interest.

5. Underground, explosion, and collapse coverage.

6. Personal injury coverage.

7. Additional insured endorsements that include both ongoing operations and products and completed operations coverage through ISO Endorsements CG 20 10 10 01 and CG 20 37 10 01 (together); or CG 20 10 07 04 and CG 20 37 07 04 (together); or their equivalent.

8. For design professional additional insureds, ISO Endorsement CG 20 32 07 04, "Additional Insured—Engineers, Architects or Surveyors Not Engaged by the Named Insured" or its equivalent.

D. Automobile liability: Contractor shall purchase and maintain automobile liability insurance against claims for damages because of bodily injury or death of any person or property damage arising out of the ownership, maintenance, or use of any motor vehicle. The automobile liability policy shall be written on an occurrence basis.

E. Umbrella or excess liability: Contractor shall purchase and maintain umbrella or excess liability insurance written over the underlying employer's liability, commercial general liability, and

automobile liability insurance described in the paragraphs above. Subject to industry-standard exclusions, the coverage afforded shall follow form as to each and every one of the underlying policies.

F. Contractor's pollution liability insurance: Contractor shall purchase and maintain a policy covering third-party injury and property damage claims, including clean-up costs, as a result of pollution conditions arising from Contractor's operations and completed operations. This insurance shall be maintained for no less than three years after final completion.

G. Additional insureds: The Contractor's commercial general liability, automobile liability, umbrella or excess, and pollution liability policies shall include and list as additional insureds Owner and Engineer, and any individuals or entities identified in the Supplementary Conditions; include coverage for the respective officers, directors, members, partners, employees, agents, consultants, and subcontractors of each and any of all such additional insureds; and the insurance afforded to these additional insureds shall provide primary coverage for all claims covered thereby (including as applicable those arising from both ongoing and completed operations) on a non-contributory basis. Contractor shall obtain all necessary endorsements to support these requirements.

H. Contractor's professional liability insurance: If Contractor will provide or furnish professional services under this Contract, through a delegation of professional design services or otherwise, then Contractor shall be responsible for purchasing and maintaining applicable professional liability insurance. This insurance shall provide protection against claims arising out of performance of professional design or related services, and caused by a negligent error, omission, or act for which the insured party is legally liable. It shall be maintained throughout the duration of the Contract and for a minimum of two years after Substantial Completion. If such professional design services are performed by a Subcontractor, and not by Contractor itself, then the requirements of this paragraph may be satisfied through the purchasing and maintenance of such insurance by such Subcontractor.

I. General provisions: The policies of insurance required by this Paragraph 6.03 shall:

1. include at least the specific coverages provided in this Article.

2. be written for not less than the limits of liability provided in this Article and in the Supplementary Conditions, or required by Laws or Regulations, whichever is greater.

3. contain a provision or endorsement that the coverage afforded will not be canceled, materially changed, or renewal refused until at least 10 days prior written notice has been given to Contractor. Within three days of receipt of any such written notice, Contractor shall provide a copy of the notice to Owner, Engineer, and each other insured under the policy.

4. remain in effect at least until final payment (and longer if expressly required in this Article) and at all times thereafter when Contractor may be correcting, removing, or replacing defective Work as a warranty or correction obligation, or otherwise, or returning to the Site to conduct other tasks arising from the Contract Documents.

5. be appropriate for the Work being performed and provide protection from claims that may arise out of or result from Contractor's performance of the Work and Contractor's other obligations under the Contract Documents, whether it is to be performed by Contractor, any Subcontractor or Supplier, or by anyone directly or indirectly employed by any of them to perform any of the Work, or by anyone for whose acts any of them may be liable.

J. The coverage requirements for specific policies of insurance must be met by such policies, and not by reference to excess or umbrella insurance provided in other policies.

6.04 Owner's Liability Insurance

A. In addition to the insurance required to be provided by Contractor under Paragraph 6.03, Owner, at Owner's option, may purchase and maintain at Owner's expense Owner's own liability insurance as will protect Owner against claims which may arise from operations under the Contract Documents.

B. Owner's liability policies, if any, operate separately and independently from policies required to be provided by Contractor, and Contractor cannot rely upon Owner's liability policies for any of Contractor's obligations to the Owner, Engineer, or third parties.

6.05 Property Insurance

A. Builder's Risk: Unless otherwise provided in the Supplementary Conditions, Contractor shall purchase and maintain builder's risk insurance upon the Work on a completed value basis, in the amount of the full insurable replacement cost thereof (subject to such deductible amounts as may be provided in the Supplementary Conditions or required by Laws and Regulations). This insurance shall:

1. include the Owner and Contractor as named insureds, and all Subcontractors, and any individuals or entities required by the Supplementary Conditions to be insured under such builder's risk policy, as insureds or named insureds. For purposes of the remainder of this Paragraph 6.05, Paragraphs 6.06 and 6.07, and any corresponding Supplementary Conditions, the parties required to be insured shall collectively be referred to as "insureds."

2. be written on a builder's risk "all risk" policy form that shall at least include insurance for physical loss or damage to the Work, temporary buildings, falsework, and materials and equipment in transit, and shall insure against at least the following perils or causes of loss: fire; lightning; windstorm; riot; civil commotion; terrorism; vehicle impact; aircraft; smoke; theft; vandalism and malicious mischief; mechanical breakdown, boiler explosion, and artificially generated electric current; earthquake; volcanic activity, and other earth movement; flood; collapse; explosion; debris removal; demolition occasioned by enforcement of Laws and Regulations; water damage (other than that caused by flood); and such other perils or causes of loss as may be specifically required by the Supplementary Conditions. If insurance against mechanical breakdown, boiler explosion, and artificially generated electric current; earthquake; volcanic activity, and other earth movement; or flood, are not commercially available under builder's risk policies, by endorsement or otherwise, such insurance may be provided through other insurance policies acceptable to Owner and Contractor.

3. cover, as insured property, at least the following: (a) the Work and all materials, supplies, machinery, apparatus, equipment, fixtures, and other property of a similar nature that are to be incorporated into or used in the preparation, fabrication, construction, erection, or completion of the Work, including Owner-furnished or assigned property; (b) spare parts inventory required within the scope of the Contract; and (c) temporary works which are not intended to form part of the permanent constructed Work but which are intended to provide working access to the Site, or to the Work under construction, or which are intended to provide temporary support for the Work under construction, including scaffolding, form work, fences, shoring, falsework, and temporary structures.

4. cover expenses incurred in the repair or replacement of any insured property (including but not limited to fees and charges of engineers and architects).

5. extend to cover damage or loss to insured property while in temporary storage at the Site or in a storage location outside the Site (but not including property stored at the premises of a manufacturer or Supplier).

6. extend to cover damage or loss to insured property while in transit.

7. allow for partial occupation or use of the Work by Owner, such that those portions of the Work that are not yet occupied or used by Owner shall remain covered by the builder's risk insurance.

8. allow for the waiver of the insurer's subrogation rights, as set forth below.

9. provide primary coverage for all losses and damages caused by the perils or causes of loss covered.

10. not include a co-insurance clause.

11. include an exception for ensuing losses from physical damage or loss with respect to any defective workmanship, design, or materials exclusions.

12. include performance/hot testing and start-up.

13. be maintained in effect, subject to the provisions herein regarding Substantial Completion and partial occupancy or use of the Work by Owner, until the Work is complete.

B. Notice of Cancellation or Change: All the policies of insurance (and the certificates or other evidence thereof) required to be purchased and maintained in accordance with this Paragraph 6.05 will contain a provision or endorsement that the coverage afforded will not be canceled or materially changed or renewal refused until at least 10 days prior written notice has been given to the purchasing policyholder. Within three days of receipt of any such written notice, the purchasing policyholder shall provide a copy of the notice to each other insured.

C. Deductibles: The purchaser of any required builder's risk or property insurance shall pay for costs not covered because of the application of a policy deductible.

D. Partial Occupancy or Use by Owner: If Owner will occupy or use a portion or portions of the Work prior to Substantial Completion of all the Work as provided in Paragraph 15.04, then Owner (directly, if it is the purchaser of the builder's risk policy, or through Contractor) will provide notice of such occupancy or use to the builder's risk insurer. The builder's risk insurance shall not be canceled or permitted to lapse on account of any such partial use or occupancy; rather, those portions of the Work that are occupied or used by Owner may come off the builder's risk policy, while those portions of the Work not yet occupied or used by Owner shall remain covered by the builder's risk insurance.

E. Additional Insurance: If Contractor elects to obtain other special insurance to be included in or supplement the builder's risk or property insurance policies provided under this Paragraph 6.05, it may do so at Contractor's expense.

F. Insurance of Other Property: If the express insurance provisions of the Contract do not require or address the insurance of a property item or interest, such as tools, construction equipment, or other personal property owned by Contractor, a Subcontractor, or an employee of Contractor or a Subcontractor, then the entity or individual owning such property item will be responsible for deciding whether to insure it, and if so in what amount.

6.06 Waiver of Rights

A. All policies purchased in accordance with Paragraph 6.05, expressly including the builder's risk policy, shall contain provisions to the effect that in the event of payment of any loss or damage the insurers will have no rights of recovery against any insureds thereunder, or against Engineer or its consultants, or their officers, directors, members, partners, employees, agents, consultants, or subcontractors. Owner and Contractor waive all rights against each other and the respective officers, directors, members, partners, employees, agents, consultants, and subcontractors of each and any of them, for all losses and damages caused by, arising out of, or resulting from any of the perils or causes of loss covered by such policies and any other property insurance applicable to the Work; and, in addition, waive all such rights against Engineer, its consultants, all Subcontractors, all individuals or entities identified in the Supplementary Conditions as insureds, and the officers, directors, members, partners, employees, agents, consultants, and subcontractors of each and any of them, under such policies for losses and damages so caused. None of the above waivers shall extend to the rights that any party making such waiver may have to the proceeds of insurance held by Owner or Contractor as trustee or fiduciary, or otherwise payable under any policy so issued.

B. Owner waives all rights against Contractor, Subcontractors, and Engineer, and the officers, directors, members, partners, employees, agents, consultants and subcontractors of each and any of them, for:

1. loss due to business interruption, loss of use, or other consequential loss extending beyond direct physical loss or damage to Owner's property or the Work caused by, arising out of, or resulting from fire or other perils whether or not insured by Owner; and

2. loss or damage to the completed Project or part thereof caused by, arising out of, or resulting from fire or other insured peril or cause of loss covered by any property insurance maintained on the completed Project or part thereof by Owner during partial occupancy or use pursuant to Paragraph 15.04, after Substantial Completion pursuant to Paragraph 15.03, or after final payment pursuant to Paragraph 15.06.

C. Any insurance policy maintained by Owner covering any loss, damage or consequential loss referred to in Paragraph 6.06.B shall contain provisions to the effect that in the event of payment of any such loss, damage, or consequential loss, the insurers will have no rights of recovery against Contractor, Subcontractors, or Engineer, or the officers, directors, members, partners, employees, agents, consultants, or subcontractors of each and any of them.

D. Contractor shall be responsible for assuring that the agreement under which a Subcontractor performs a portion of the Work contains provisions whereby the Subcontractor waives all rights against Owner, Contractor, all individuals or entities identified in the Supplementary Conditions as insureds, the Engineer and its consultants, and the officers, directors, members, partners, employees, agents, consultants, and subcontractors of each and any of them, for all losses and damages caused by, arising out of, relating to, or resulting from any of the perils or causes of loss covered by builder's risk insurance and any other property insurance applicable to the Work.

6.07 Receipt and Application of Property Insurance Proceeds

A. Any insured loss under the builder's risk and other policies of insurance required by Paragraph 6.05 will be adjusted and settled with the named insured that purchased the policy. Such named insured shall act as fiduciary for the other insureds, and give notice to such other insureds that adjustment and settlement of a claim is in progress. Any other insured may state its position regarding a claim for insured loss in writing within 15 days after notice of such claim.

B. Proceeds for such insured losses may be made payable by the insurer either jointly to multiple insureds, or to the named insured that purchased the policy in its own right and as fiduciary for other insureds, subject to the requirements of any applicable mortgage clause. A named insured receiving insurance proceeds under the builder's risk and other policies of insurance required by Paragraph 6.05 shall distribute such proceeds in accordance with such agreement as the parties in interest may reach, or as otherwise required under the dispute resolution provisions of this Contract or applicable Laws and Regulations.

C. If no other special agreement is reached, the damaged Work shall be repaired or replaced, the money so received applied on account thereof, and the Work and the cost thereof covered by Change Order, if needed.

ARTICLE 7 – CONTRACTOR'S RESPONSIBILITIES

7.01 Supervision and Superintendence

A. Contractor shall supervise, inspect, and direct the Work competently and efficiently, devoting such attention thereto and applying such skills and expertise as may be necessary to perform the Work in accordance with the Contract Documents. Contractor shall be solely responsible for the means, methods, techniques, sequences, and procedures of construction.

B. At all times during the progress of the Work, Contractor shall assign a competent resident superintendent who shall not be replaced without written notice to Owner and Engineer except under extraordinary circumstances.

7.02 Labor; Working Hours

A. Contractor shall provide competent, suitably qualified personnel to survey and lay out the Work and perform construction as required by the Contract Documents. Contractor shall at all times maintain good discipline and order at the Site.

B. Except as otherwise required for the safety or protection of persons or the Work or property at the Site or adjacent thereto, and except as otherwise stated in the Contract Documents, all

Work at the Site shall be performed during regular working hours, Monday through Friday. Contractor will not perform Work on a Saturday, Sunday, or any legal holiday. Contractor may perform Work outside regular working hours or on Saturdays, Sundays, or legal holidays only with Owner's written consent, which will not be unreasonably withheld.

7.03 Services, Materials, and Equipment

A. Unless otherwise specified in the Contract Documents, Contractor shall provide and assume full responsibility for all services, materials, equipment, labor, transportation, construction equipment and machinery, tools, appliances, fuel, power, light, heat, telephone, water, sanitary facilities, temporary facilities, and all other facilities and incidentals necessary for the performance, testing, start up, and completion of the Work, whether or not such items are specifically called for in the Contract Documents.

B. All materials and equipment incorporated into the Work shall be of good quality and new, except as otherwise provided in the Contract Documents. All special warranties and guarantees required by the Specifications shall expressly run to the benefit of Owner. If required by Engineer, Contractor shall furnish satisfactory evidence (including reports of required tests) as to the source, kind, and quality of materials and equipment.

C. All materials and equipment shall be stored, applied, installed, connected, erected, protected, used, cleaned, and conditioned in accordance with instructions of the applicable Supplier, except as otherwise may be provided in the Contract Documents.

7.04 "Or Equals"

A. Whenever an item of material or equipment is specified or described in the Contract Documents by using the name of a proprietary item or the name of a particular Supplier, the Contract Price has been based upon Contractor furnishing such item as specified. The specification or description of such an item is intended to establish the type, function, appearance, and quality required. Unless the specification or description contains or is followed by words reading that no like, equivalent, or "or equal" item is permitted, Contractor may request that Engineer authorize the use of other items of material or equipment, or items from other proposed suppliers under the circumstances described below.

1. If Engineer in its sole discretion determines that an item of material or equipment proposed by Contractor is functionally equal to that named and sufficiently similar so that no change in related Work will be required, Engineer shall deem it an "or equal" item. For the purposes of this paragraph, a proposed item of material or equipment will be considered functionally equal to an item so named if:

a. in the exercise of reasonable judgment Engineer determines that:

1) it is at least equal in materials of construction, quality, durability, appearance, strength, and design characteristics;

2) it will reliably perform at least equally well the function and achieve the results imposed by the design concept of the completed Project as a functioning whole;

3) it has a proven record of performance and availability of responsive service; and

4) it is not objectionable to Owner.

b. Contractor certifies that, if approved and incorporated into the Work:

1) there will be no increase in cost to the Owner or increase in Contract Times; and

2) it will conform substantially to the detailed requirements of the item named in the Contract Documents.

B. Contractor's Expense: Contractor shall provide all data in support of any proposed "or equal" item at Contractor's expense.

C. Engineer's Evaluation and Determination: Engineer will be allowed a reasonable time to evaluate each "or-equal" request. Engineer may require Contractor to furnish additional data about the proposed "or-equal" item. Engineer will be the sole judge of acceptability. No "or-equal" item will be ordered, furnished, installed, or utilized until Engineer's review is complete and Engineer determines that the proposed item is an "or-equal", which will be evidenced by an approved Shop Drawing or other written communication. Engineer will advise Contractor in writing of any negative determination.

D. Effect of Engineer's Determination: Neither approval nor denial of an "or-equal" request shall result in any change in Contract Price. The Engineer's denial of an "or-equal" request shall be final and binding, and may not be reversed through an appeal under any provision of the Contract Documents.

E. Treatment as a Substitution Request: If Engineer determines that an item of material or equipment proposed by Contractor does not qualify as an "or-equal" item, Contractor may request that Engineer considered the proposed item as a substitute pursuant to Paragraph 7.05.

7.05 Substitutes

A. Unless the specification or description of an item of material or equipment required to be furnished under the Contract Documents contains or is followed by words reading that no substitution is permitted, Contractor may request that Engineer authorize the use of other items of material or equipment under the circumstances described below. To the extent possible such requests shall be made before commencement of related construction at the Site.

1. Contractor shall submit sufficient information as provided below to allow Engineer to determine if the item of material or equipment proposed is functionally equivalent to that named and an acceptable substitute therefor. Engineer will not accept requests for review of proposed substitute items of material or equipment from anyone other than Contractor.

2. The requirements for review by Engineer will be as set forth in Paragraph 7.05.B, as supplemented by the Specifications, and as Engineer may decide is appropriate under the circumstances.

3. Contractor shall make written application to Engineer for review of a proposed substitute item of material or equipment that Contractor seeks to furnish or use. The application:

a. shall certify that the proposed substitute item will:

1) perform adequately the functions and achieve the results called for by the general design,

2) be similar in substance to that specified, and

3) be suited to the same use as that specified.

b. will state:

1) the extent, if any, to which the use of the proposed substitute item will necessitate a change in Contract Times,

2) whether use of the proposed substitute item in the Work will require a change in any of the Contract Documents (or in the provisions of any other direct contract with Owner for other work on the Project) to adapt the design to the proposed substitute item, and

3) whether incorporation or use of the proposed substitute item in connection with the Work is subject to payment of any license fee or royalty.

c. will identify:

1) all variations of the proposed substitute item from that specified, and

2) available engineering, sales, maintenance, repair, and replacement services.

d. shall contain an itemized estimate of all costs or credits that will result directly or indirectly from use of such substitute item, including but not limited to changes in Contract Price, shared savings, costs of redesign, and claims of other contractors affected by any resulting change.

B. Engineer's Evaluation and Determination: Engineer will be allowed a reasonable time to evaluate each substitute request, and to obtain comments and direction from Owner. Engineer may require Contractor to furnish additional data about the proposed substitute item. Engineer will be the sole judge of acceptability. No substitute will be ordered, furnished, installed, or utilized until Engineer's review is complete and Engineer determines that the proposed item is an acceptable substitute. Engineer's determination will be evidenced by a Field Order or a proposed Change Order accounting for the substitution itself and all related impacts, including changes in Contract Price or Contract Times. Engineer will advise Contractor in writing of any negative determination.

C. Special Guarantee: Owner may require Contractor to furnish at Contractor's expense a special performance guarantee or other surety with respect to any substitute.

D. Reimbursement of Engineer's Cost: Engineer will record Engineer's costs in evaluating a substitute proposed or submitted by Contractor. Whether or not Engineer approves a substitute so proposed or submitted by Contractor, Contractor shall reimburse Owner for the reasonable charges of Engineer for evaluating each such proposed substitute. Contractor shall also reimburse Owner for the reasonable charges of Engineer for making changes in the Contract Documents (or in the provisions of any other direct contract with Owner) resulting from the acceptance of each proposed substitute.

E. Contractor's Expense: Contractor shall provide all data in support of any proposed substitute at Contractor's expense.

F. Effect of Engineer's Determination: If Engineer approves the substitution request, Contractor shall execute the proposed Change Order and proceed with the substitution. The Engineer's denial of a substitution request shall be final and binding, and may not be reversed through an appeal under any provision of the Contract Documents. Contractor may challenge the scope of reimbursement costs imposed under Paragraph 7.05.D, by timely submittal of a Change Proposal.

7.06 Concerning Subcontractors, Suppliers, and Others

A. Contractor may retain Subcontractors and Suppliers for the performance of parts of the Work. Such Subcontractors and Suppliers must be acceptable to Owner.

B. Contractor shall retain specific Subcontractors, Suppliers, or other individuals or entities for the performance of designated parts of the Work if required by the Contract to do so.

C. Subsequent to the submittal of Contractor's Bid or final negotiation of the terms of the Contract, Owner may not require Contractor to retain any Subcontractor, Supplier, or other individual or entity to furnish or perform any of the Work against which Contractor has reasonable objection.

D. Prior to entry into any binding subcontract or purchase order, Contractor shall submit to Owner the identity of the proposed Subcontractor or Supplier (unless Owner has already deemed such proposed Subcontractor or Supplier acceptable, during the bidding process or otherwise). Such proposed Subcontractor or Supplier shall be deemed acceptable to Owner unless Owner raises a substantive, reasonable objection within five days.

E. Owner may require the replacement of any Subcontractor, Supplier, or other individual or entity retained by Contractor to perform any part of the Work. Owner also may require Contractor to retain specific replacements; provided, however, that Owner may not require a replacement to which Contractor has a reasonable objection. If Contractor has submitted the identity of certain Subcontractors, Suppliers, or other individuals or entities for acceptance by Owner, and Owner has accepted it (either in writing or by failing to make written objection thereto), then Owner may subsequently revoke the acceptance of any such Subcontractor, Supplier, or other individual or entity so identified solely on the basis of substantive,

reasonable objection after due investigation. Contractor shall submit an acceptable replacement for the rejected Subcontractor, Supplier, or other individual or entity.

F. If Owner requires the replacement of any Subcontractor, Supplier, or other individual or entity retained by Contractor to perform any part of the Work, then Contractor shall be entitled to an adjustment in Contract Price or Contract Times, or both, with respect to the replacement; and Contractor shall initiate a Change Proposal for such adjustment within 30 days of Owner's requirement of replacement.

G. No acceptance by Owner of any such Subcontractor, Supplier, or other individual or entity, whether initially or as a replacement, shall constitute a waiver of the right of Owner to the completion of the Work in accordance with the Contract Documents.

H. On a monthly basis Contractor shall submit to Engineer a complete list of all Subcontractors and Suppliers having a direct contract with Contractor, and of all other Subcontractors and Suppliers known to Contractor at the time of submittal.

I. Contractor shall be fully responsible to Owner and Engineer for all acts and omissions of the Subcontractors, Suppliers, and other individuals or entities performing or furnishing any of the Work just as Contractor is responsible for Contractor's own acts and omissions.

J. Contractor shall be solely responsible for scheduling and coordinating the work of Subcontractors, Suppliers, and all other individuals or entities performing or furnishing any of the Work.

K. Contractor shall restrict all Subcontractors, Suppliers, and such other individuals or entities performing or furnishing any of the Work from communicating with Engineer or Owner, except through Contractor or in case of an emergency, or as otherwise expressly allowed herein.

L. The divisions and sections of the Specifications and the identifications of any Drawings shall not control Contractor in dividing the Work among Subcontractors or Suppliers or delineating the Work to be performed by any specific trade.

M. All Work performed for Contractor by a Subcontractor or Supplier shall be pursuant to an appropriate contractual agreement that specifically binds the Subcontractor or Supplier to the applicable terms and conditions of the Contract Documents for the benefit of Owner and Engineer.

N. Owner may furnish to any Subcontractor or Supplier, to the extent practicable, information about amounts paid to Contractor on account of Work performed for Contractor by the particular Subcontractor or Supplier.

O. Nothing in the Contract Documents:

1. shall create for the benefit of any such Subcontractor, Supplier, or other individual or entity any contractual relationship between Owner or Engineer and any such Subcontractor, Supplier, or other individual or entity; nor

2. shall create any obligation on the part of Owner or Engineer to pay or to see to the payment of any money due any such Subcontractor, Supplier, or other individual or entity except as may otherwise be required by Laws and Regulations.

7.07 Patent Fees and Royalties

A. Contractor shall pay all license fees and royalties and assume all costs incident to the use in the performance of the Work or the incorporation in the Work of any invention, design, process, product, or device which is the subject of patent rights or copyrights held by others. If a particular invention, design, process, product, or device is specified in the Contract Documents for use in the performance of the Work and if, to the actual knowledge of Owner or Engineer, its use is subject to patent rights or copyrights calling for the payment of any license fee or royalty to others, the existence of such rights shall be disclosed by Owner in the Contract Documents.

B. To the fullest extent permitted by Laws and Regulations, Owner shall indemnify and hold harmless Contractor, and its officers, directors, members, partners, employees, agents,

consultants, and subcontractors from and against all claims, costs, losses, and damages (including but not limited to all fees and charges of engineers, architects, attorneys, and other professionals, and all court or arbitration or other dispute resolution costs) arising out of or relating to any infringement of patent rights or copyrights incident to the use in the performance of the Work or resulting from the incorporation in the Work of any invention, design, process, product, or device specified in the Contract Documents, but not identified as being subject to payment of any license fee or royalty to others required by patent rights or copyrights.

C. To the fullest extent permitted by Laws and Regulations, Contractor shall indemnify and hold harmless Owner and Engineer, and the officers, directors, members, partners, employees, agents, consultants and subcontractors of each and any of them from and against all claims, costs, losses, and damages (including but not limited to all fees and charges of engineers, architects, attorneys, and other professionals and all court or arbitration or other dispute resolution costs) arising out of or relating to any infringement of patent rights or copyrights incident to the use in the performance of the Work or resulting from the incorporation in the Work of any invention, design, process, product, or device not specified in the Contract Documents.

7.08 Permits

A. Unless otherwise provided in the Contract Documents, Contractor shall obtain and pay for all construction permits and licenses. Owner shall assist Contractor, when necessary, in obtaining such permits and licenses. Contractor shall pay all governmental charges and inspection fees necessary for the prosecution of the Work which are applicable at the time of the submission of Contractor's Bid (or when Contractor became bound under a negotiated contract). Owner shall pay all charges of utility owners for connections for providing permanent service to the Work

7.09 Taxes

A. Contractor shall pay all sales, consumer, use, and other similar taxes required to be paid by Contractor in accordance with the Laws and Regulations of the place of the Project which are applicable during the performance of the Work.

7.10 Laws and Regulations

A. Contractor shall give all notices required by and shall comply with all Laws and Regulations applicable to the performance of the Work. Except where otherwise expressly required by applicable Laws and Regulations, neither Owner nor Engineer shall be responsible for monitoring Contractor's compliance with any Laws or Regulations.

B. If Contractor performs any Work or takes any other action knowing or having reason to know that it is contrary to Laws or Regulations, Contractor shall bear all resulting costs and losses, and shall indemnify and hold harmless Owner and Engineer, and the officers, directors, members, partners, employees, agents, consultants, and subcontractors of each and any of them from and against all claims, costs, losses, and damages (including but not limited to all fees and charges of engineers, architects, attorneys, and other professionals and all court or arbitration or other dispute resolution costs) arising out of or relating to such Work or other action. It shall not be Contractor's responsibility to make certain that the Work described in the Contract Documents is in accordance with Laws and Regulations, but this shall not relieve Contractor of Contractor's obligations under Paragraph 3.03.

C. Owner or Contractor may give notice to the other party of any changes after the submission of Contractor's Bid (or after the date when Contractor became bound under a negotiated contract) in Laws or Regulations having an effect on the cost or time of performance of the Work, including but not limited to changes in Laws or Regulations having an effect on procuring permits and on sales, use, value-added, consumption, and other similar taxes. If Owner and Contractor are unable to agree on entitlement to or on the amount or extent, if any, of any adjustment in Contract Price or Contract Times resulting from such changes, then within 30 days of such notice Contractor may submit a Change Proposal, or Owner may initiate a Claim.

7.11 Record Documents

A. Contractor shall maintain in a safe place at the Site one printed record copy of all Drawings, Specifications, Addenda, Change Orders, Work Change Directives, Field Orders, written interpretations and clarifications, and approved Shop Drawings. Contractor shall keep such record documents in good order and annotate them to show changes made during construction. These record documents, together with all approved Samples, will be available to Engineer for reference. Upon completion of the Work, Contractor shall deliver these record documents to Engineer.

7.12 Safety and Protection

A. Contractor shall be solely responsible for initiating, maintaining, and supervising all safety precautions and programs in connection with the Work. Such responsibility does not relieve Subcontractors of their responsibility for the safety of persons or property in the performance of their work, nor for compliance with applicable safety Laws and Regulations. Contractor shall take all necessary precautions for the safety of, and shall provide the necessary protection to prevent damage, injury, or loss to:

1. all persons on the Site or who may be affected by the Work;

2. all the Work and materials and equipment to be incorporated therein, whether in storage on or off the Site; and

3. other property at the Site or adjacent thereto, including trees, shrubs, lawns, walks, pavements, roadways, structures, other work in progress, utilities, and Underground Facilities not designated for removal, relocation, or replacement in the course of construction.

B. Contractor shall comply with all applicable Laws and Regulations relating to the safety of persons or property, or to the protection of persons or property from damage, injury, or loss; and shall erect and maintain all necessary safeguards for such safety and protection. Contractor shall notify Owner; the owners of adjacent property, Underground Facilities, and other utilities; and other contractors and utility owners performing work at or adjacent to the Site, when prosecution of the Work may affect them, and shall cooperate with them in the protection, removal, relocation, and replacement of their property or work in progress.

C. Contractor shall comply with the applicable requirements of Owner's safety programs, if any. The Supplementary Conditions identify any Owner's safety programs that are applicable to the Work.

D. Contractor shall inform Owner and Engineer of the specific requirements of Contractor's safety program with which Owner's and Engineer's employees and representatives must comply while at the Site.

E. All damage, injury, or loss to any property referred to in Paragraph 7.12.A.2 or 7.12.A.3 caused, directly or indirectly, in whole or in part, by Contractor, any Subcontractor, Supplier, or any other individual or entity directly or indirectly employed by any of them to perform any of the Work, or anyone for whose acts any of them may be liable, shall be remedied by Contractor at its expense (except damage or loss attributable to the fault of Drawings or Specifications or to the acts or omissions of Owner or Engineer or anyone employed by any of them, or anyone for whose acts any of them may be liable, and not attributable, directly or indirectly, in whole or in part, to the fault or negligence of Contractor or any Subcontractor, Supplier, or other individual or entity directly or indirectly employed by any of them).

F. Contractor's duties and responsibilities for safety and protection shall continue until such time as all the Work is completed and Engineer has issued a notice to Owner and Contractor in accordance with Paragraph 15.06.B that the Work is acceptable (except as otherwise expressly provided in connection with Substantial Completion).

G. Contractor's duties and responsibilities for safety and protection shall resume whenever Contractor or any Subcontractor or Supplier returns to the Site to fulfill warranty or correction obligations, or to conduct other tasks arising from the Contract Documents.

7.13 Safety Representative

A. Contractor shall designate a qualified and experienced safety representative at the Site whose duties and responsibilities shall be the prevention of accidents and the maintaining and supervising of safety precautions and programs.

7.14 Hazard Communication Programs

A. Contractor shall be responsible for coordinating any exchange of material safety data sheets or other hazard communication information required to be made available to or exchanged between or among employers at the Site in accordance with Laws or Regulations.

7.15 Emergencies

A. In emergencies affecting the safety or protection of persons or the Work or property at the Site or adjacent thereto, Contractor is obligated to act to prevent threatened damage, injury, or loss. Contractor shall give Engineer prompt written notice if Contractor believes that any significant changes in the Work or variations from the Contract Documents have been caused thereby or are required as a result thereof. If Engineer determines that a change in the Contract Documents is required because of the action taken by Contractor in response to such an emergency, a Work Change Directive or Change Order will be issued.

7.16 Shop Drawings, Samples, and Other Submittals

A. Shop Drawing and Sample Submittal Requirements:

1. Before submitting a Shop Drawing or Sample, Contractor shall have:

a. reviewed and coordinated the Shop Drawing or Sample with other Shop Drawings and Samples and with the requirements of the Work and the Contract Documents;

b. determined and verified all field measurements, quantities, dimensions, specified performance and design criteria, installation requirements, materials, catalog numbers, and similar information with respect thereto;

c. determined and verified the suitability of all materials and equipment offered with respect to the indicated application, fabrication, shipping, handling, storage, assembly, and installation pertaining to the performance of the Work; and

d. determined and verified all information relative to Contractor's responsibilities for means, methods, techniques, sequences, and procedures of construction, and safety precautions and programs incident thereto.

2. Each submittal shall bear a stamp or specific written certification that Contractor has satisfied Contractor's obligations under the Contract Documents with respect to Contractor's review of that submittal, and that Contractor approves the submittal.

3. With each submittal, Contractor shall give Engineer specific written notice of any variations that the Shop Drawing or Sample may have from the requirements of the Contract Documents. This notice shall be set forth in a written communication separate from the Shop Drawings or Sample submittal; and, in addition, in the case of Shop Drawings by a specific notation made on each Shop Drawing submitted to Engineer for review and approval of each such variation.

B. Submittal Procedures for Shop Drawings and Samples: Contractor shall submit Shop Drawings and Samples to Engineer for review and approval in accordance with the accepted Schedule of Submittals. Each submittal will be identified as Engineer may require.

1. Shop Drawings:

a. Contractor shall submit the number of copies required in the Specifications.

b. Data shown on the Shop Drawings will be complete with respect to quantities, dimensions, specified performance and design criteria, materials, and similar data to show Engineer the services, materials, and equipment Contractor proposes to

provide and to enable Engineer to review the information for the limited purposes required by Paragraph 7.16.D.

2. Samples:

   a. Contractor shall submit the number of Samples required in the Specifications.

   b. Contractor shall clearly identify each Sample as to material, Supplier, pertinent data such as catalog numbers, the use for which intended and other data as Engineer may require to enable Engineer to review the submittal for the limited purposes required by Paragraph 7.16.D.

3. Where a Shop Drawing or Sample is required by the Contract Documents or the Schedule of Submittals, any related Work performed prior to Engineer's review and approval of the pertinent submittal will be at the sole expense and responsibility of Contractor.

C. Other Submittals: Contractor shall submit other submittals to Engineer in accordance with the accepted Schedule of Submittals, and pursuant to the applicable terms of the Specifications.

D. Engineer's Review:

1. Engineer will provide timely review of Shop Drawings and Samples in accordance with the Schedule of Submittals acceptable to Engineer. Engineer's review and approval will be only to determine if the items covered by the submittals will, after installation or incorporation in the Work, conform to the information given in the Contract Documents and be compatible with the design concept of the completed Project as a functioning whole as indicated by the Contract Documents.

2. Engineer's review and approval will not extend to means, methods, techniques, sequences, or procedures of construction or to safety precautions or programs incident thereto.

3. Engineer's review and approval of a separate item as such will not indicate approval of the assembly in which the item functions.

4. Engineer's review and approval of a Shop Drawing or Sample shall not relieve Contractor from responsibility for any variation from the requirements of the Contract Documents unless Contractor has complied with the requirements of Paragraph 7.16.A.3 and Engineer has given written approval of each such variation by specific written notation thereof incorporated in or accompanying the Shop Drawing or Sample. Engineer will document any such approved variation from the requirements of the Contract Documents in a Field Order.

5. Engineer's review and approval of a Shop Drawing or Sample shall not relieve Contractor from responsibility for complying with the requirements of Paragraph 7.16.A and B.

6. Engineer's review and approval of a Shop Drawing or Sample, or of a variation from the requirements of the Contract Documents, shall not, under any circumstances, change the Contract Times or Contract Price, unless such changes are included in a Change Order.

7. Neither Engineer's receipt, review, acceptance or approval of a Shop Drawing, Sample, or other submittal shall result in such item becoming a Contract Document.

8. Contractor shall perform the Work in compliance with the requirements and commitments set forth in approved Shop Drawings and Samples, subject to the provisions of Paragraph 7.16.D.4.

E. Resubmittal Procedures:

1. Contractor shall make corrections required by Engineer and shall return the required number of corrected copies of Shop Drawings and submit, as required, new Samples for review and approval. Contractor shall direct specific attention in writing to revisions other than the corrections called for by Engineer on previous submittals.

2. Contractor shall furnish required submittals with sufficient information and accuracy to obtain required approval of an item with no more than three submittals. Engineer will record Engineer's time for reviewing a fourth or subsequent submittal of a Shop Drawings, sample, or other item requiring approval, and Contractor shall be responsible for Engineer's charges to Owner for such time. Owner may impose a set-off against payments due to Contractor to secure reimbursement for such charges.

3. If Contractor requests a change of a previously approved submittal item, Contractor shall be responsible for Engineer's charges to Owner for its review time, and Owner may impose a set-off against payments due to Contractor to secure reimbursement for such charges, unless the need for such change is beyond the control of Contractor.

7.17 Contractor's General Warranty and Guarantee

A. Contractor warrants and guarantees to Owner that all Work will be in accordance with the Contract Documents and will not be defective. Engineer and its officers, directors, members, partners, employees, agents, consultants, and subcontractors shall be entitled to rely on Contractor's warranty and guarantee.

B. Contractor's warranty and guarantee hereunder excludes defects or damage caused by:

1. abuse, modification, or improper maintenance or operation by persons other than Contractor, Subcontractors, Suppliers, or any other individual or entity for whom Contractor is responsible; or

2. normal wear and tear under normal usage.

C. Contractor's obligation to perform and complete the Work in accordance with the Contract Documents shall be absolute. None of the following will constitute an acceptance of Work that is not in accordance with the Contract Documents or a release of Contractor's obligation to perform the Work in accordance with the Contract Documents:

1. observations by Engineer;

2. recommendation by Engineer or payment by Owner of any progress or final payment;

3. the issuance of a certificate of Substantial Completion by Engineer or any payment related thereto by Owner;

4. use or occupancy of the Work or any part thereof by Owner;

5. any review and approval of a Shop Drawing or Sample submittal;

6. the issuance of a notice of acceptability by Engineer;

7. any inspection, test, or approval by others; or

8. any correction of defective Work by Owner.

D. If the Contract requires the Contractor to accept the assignment of a contract entered into by Owner, then the specific warranties, guarantees, and correction obligations contained in the assigned contract shall govern with respect to Contractor's performance obligations to Owner for the Work described in the assigned contract.

7.18 Indemnification

A. To the fullest extent permitted by Laws and Regulations, and in addition to any other obligations of Contractor under the Contract or otherwise, Contractor shall indemnify and hold harmless Owner and Engineer, and the officers, directors, members, partners, employees, agents, consultants and subcontractors of each and any of them from and against all claims, costs, losses, and damages (including but not limited to all fees and charges of engineers, architects, attorneys, and other professionals and all court or arbitration or other dispute resolution costs) arising out of or relating to the performance of the Work, provided that any such claim, cost, loss, or damage is attributable to bodily injury, sickness, disease, or death, or to injury to or destruction of tangible property (other than the Work itself), including the loss of use resulting therefrom but only to the extent caused by any negligent act or omission of

Contractor, any Subcontractor, any Supplier, or any individual or entity directly or indirectly employed by any of them to perform any of the Work or anyone for whose acts any of them may be liable.

B. In any and all claims against Owner or Engineer or any of their officers, directors, members, partners, employees, agents, consultants, or subcontractors by any employee (or the survivor or personal representative of such employee) of Contractor, any Subcontractor, any Supplier, or any individual or entity directly or indirectly employed by any of them to perform any of the Work, or anyone for whose acts any of them may be liable, the indemnification obligation under Paragraph 7.18.A shall not be limited in any way by any limitation on the amount or type of damages, compensation, or benefits payable by or for Contractor or any such Subcontractor, Supplier, or other individual or entity under workers' compensation acts, disability benefit acts, or other employee benefit acts.

C. The indemnification obligations of Contractor under Paragraph 7.18.A shall not extend to the liability of Engineer and Engineer's officers, directors, members, partners, employees, agents, consultants and subcontractors arising out of:

1. the preparation or approval of, or the failure to prepare or approve maps, Drawings, opinions, reports, surveys, Change Orders, designs, or Specifications; or

2. giving directions or instructions, or failing to give them, if that is the primary cause of the injury or damage.

7.19 Delegation of Professional Design Services

A. Contractor will not be required to provide professional design services unless such services are specifically required by the Contract Documents for a portion of the Work or unless such services are required to carry out Contractor's responsibilities for construction means, methods, techniques, sequences and procedures. Contractor shall not be required to provide professional services in violation of applicable Laws and Regulations.

B. If professional design services or certifications by a design professional related to systems, materials, or equipment are specifically required of Contractor by the Contract Documents, Owner and Engineer will specify all performance and design criteria that such services must satisfy. Contractor shall cause such services or certifications to be provided by a properly licensed professional, whose signature and seal shall appear on all drawings, calculations, specifications, certifications, and other submittals prepared by such professional. Shop Drawings and other submittals related to the Work designed or certified by such professional, if prepared by others, shall bear such professional's written approval when submitted to Engineer.

C. Owner and Engineer shall be entitled to rely upon the adequacy, accuracy, and completeness of the services, certifications, or approvals performed by such design professionals, provided Owner and Engineer have specified to Contractor all performance and design criteria that such services must satisfy.

D. Pursuant to this paragraph, Engineer's review and approval of design calculations and design drawings will be only for the limited purpose of checking for conformance with performance and design criteria given and the design concept expressed in the Contract Documents. Engineer's review and approval of Shop Drawings and other submittals (except design calculations and design drawings) will be only for the purpose stated in Paragraph 7.16.D.1.

E. Contractor shall not be responsible for the adequacy of the performance or design criteria specified by Owner or Engineer.

ARTICLE 8 – OTHER WORK AT THE SITE

8.01 Other Work

A. In addition to and apart from the Work under the Contract Documents, the Owner may perform other work at or adjacent to the Site. Such other work may be performed by Owner's employees, or through contracts between the Owner and third parties. Owner may also

arrange to have third-party utility owners perform work on their utilities and facilities at or adjacent to the Site.

B. If Owner performs other work at or adjacent to the Site with Owner's employees, or through contracts for such other work, then Owner shall give Contractor written notice thereof prior to starting any such other work. If Owner has advance information regarding the start of any utility work at or adjacent to the Site, Owner shall provide such information to Contractor.

C. Contractor shall afford each other contractor that performs such other work, each utility owner performing other work, and Owner, if Owner is performing other work with Owner's employees, proper and safe access to the Site, and provide a reasonable opportunity for the introduction and storage of materials and equipment and the execution of such other work. Contractor shall do all cutting, fitting, and patching of the Work that may be required to properly connect or otherwise make its several parts come together and properly integrate with such other work. Contractor shall not endanger any work of others by cutting, excavating, or otherwise altering such work; provided, however, that Contractor may cut or alter others' work with the written consent of Engineer and the others whose work will be affected.

D. If the proper execution or results of any part of Contractor's Work depends upon work performed by others under this Article 8, Contractor shall inspect such other work and promptly report to Engineer in writing any delays, defects, or deficiencies in such other work that render it unavailable or unsuitable for the proper execution and results of Contractor's Work. Contractor's failure to so report will constitute an acceptance of such other work as fit and proper for integration with Contractor's Work except for latent defects and deficiencies in such other work.

8.02 Coordination

A. If Owner intends to contract with others for the performance of other work at or adjacent to the Site, to perform other work at or adjacent to the Site with Owner's employees, or to arrange to have utility owners perform work at or adjacent to the Site, the following will be set forth in the Supplementary Conditions or provided to Contractor prior to the start of any such other work:

1. the identity of the individual or entity that will have authority and responsibility for coordination of the activities among the various contractors;

2. an itemization of the specific matters to be covered by such authority and responsibility; and

3. the extent of such authority and responsibilities.

B. Unless otherwise provided in the Supplementary Conditions, Owner shall have sole authority and responsibility for such coordination.

8.03 Legal Relationships

A. If, in the course of performing other work at or adjacent to the Site for Owner, the Owner's employees, any other contractor working for Owner, or any utility owner causes damage to the Work or to the property of Contractor or its Subcontractors, or delays, disrupts, interferes with, or increases the scope or cost of the performance of the Work, through actions or inaction, then Contractor shall be entitled to an equitable adjustment in the Contract Price or the Contract Times, or both. Contractor must submit any Change Proposal seeking an equitable adjustment in the Contract Price or the Contract Times under this paragraph within 30 days of the damaging, delaying, disrupting, or interfering event. The entitlement to, and extent of, any such equitable adjustment shall take into account information (if any) regarding such other work that was provided to Contractor in the Contract Documents prior to the submittal of the Bid or the final negotiation of the terms of the Contract. When applicable, any such equitable adjustment in Contract Price shall be conditioned on Contractor assigning to Owner all Contractor's rights against such other contractor or utility owner with respect to the damage, delay, disruption, or interference that is the subject of the adjustment. Contractor's entitlement to an adjustment of the Contract Times is conditioned on such adjustment being essential to Contractor's ability to complete the Work within the Contract Times.

B. Contractor shall take reasonable and customary measures to avoid damaging, delaying, disrupting, or interfering with the work of Owner, any other contractor, or any utility owner performing other work at or adjacent to the Site. If Contractor fails to take such measures and as a result damages, delays, disrupts, or interferes with the work of any such other contractor or utility owner, then Owner may impose a set-off against payments due to Contractor, and assign to such other contractor or utility owner the Owner's contractual rights against Contractor with respect to the breach of the obligations set forth in this paragraph.

C. When Owner is performing other work at or adjacent to the Site with Owner's employees, Contractor shall be liable to Owner for damage to such other work, and for the reasonable direct delay, disruption, and interference costs incurred by Owner as a result of Contractor's failure to take reasonable and customary measures with respect to Owner's other work. In response to such damage, delay, disruption, or interference, Owner may impose a set-off against payments due to Contractor.

D. If Contractor damages, delays, disrupts, or interferes with the work of any other contractor, or any utility owner performing other work at or adjacent to the Site, through Contractor's failure to take reasonable and customary measures to avoid such impacts, or if any claim arising out of Contractor's actions, inactions, or negligence in performance of the Work at or adjacent to the Site is made by any such other contractor or utility owner against Contractor, Owner, or Engineer, then Contractor shall (1) promptly attempt to settle the claim as to all parties through negotiations with such other contractor or utility owner, or otherwise resolve the claim by arbitration or other dispute resolution proceeding or at law, and (2) indemnify and hold harmless Owner and Engineer, and the officers, directors, members, partners, employees, agents, consultants and subcontractors of each and any of them from and against any such claims, and against all costs, losses, and damages (including but not limited to all fees and charges of engineers, architects, attorneys, and other professionals and all court or arbitration or other dispute resolution costs) arising out of or relating to such damage, delay, disruption, or interference.

ARTICLE 9 – OWNER'S RESPONSIBILITIES

9.01 Communications to Contractor

A. Except as otherwise provided in these General Conditions, Owner shall issue all communications to Contractor through Engineer.

9.02 Replacement of Engineer

A. Owner may at its discretion appoint an engineer to replace Engineer, provided Contractor makes no reasonable objection to the replacement engineer. The replacement engineer's status under the Contract Documents shall be that of the former Engineer.

9.03 Furnish Data

A. Owner shall promptly furnish the data required of Owner under the Contract Documents.

9.04 Pay When Due

A. Owner shall make payments to Contractor when they are due as provided in the Agreement.

9.05 Lands and Easements; Reports, Tests, and Drawings

A. Owner's duties with respect to providing lands and easements are set forth in Paragraph 5.01.

B. Owner's duties with respect to providing engineering surveys to establish reference points are set forth in Paragraph 4.03.

C. Article 5 refers to Owner's identifying and making available to Contractor copies of reports of explorations and tests of conditions at the Site, and drawings of physical conditions relating to existing surface or subsurface structures at the Site.

9.06 Insurance

A. Owner's responsibilities, if any, with respect to purchasing and maintaining liability and property insurance are set forth in Article 6.

9.07 Change Orders

A. Owner's responsibilities with respect to Change Orders are set forth in Article 11.

9.08 Inspections, Tests, and Approvals

A. Owner's responsibility with respect to certain inspections, tests, and approvals is set forth in Paragraph 14.02.B.

9.09 Limitations on Owner's Responsibilities

A. The Owner shall not supervise, direct, or have control or authority over, nor be responsible for, Contractor's means, methods, techniques, sequences, or procedures of construction, or the safety precautions and programs incident thereto, or for any failure of Contractor to comply with Laws and Regulations applicable to the performance of the Work. Owner will not be responsible for Contractor's failure to perform the Work in accordance with the Contract Documents.

9.10 Undisclosed Hazardous Environmental Condition

A. Owner's responsibility in respect to an undisclosed Hazardous Environmental Condition is set forth in Paragraph 5.06.

9.11 Evidence of Financial Arrangements

A. Upon request of Contractor, Owner shall furnish Contractor reasonable evidence that financial arrangements have been made to satisfy Owner's obligations under the Contract Documents (including obligations under proposed changes in the Work).

9.12 Safety Programs

A. While at the Site, Owner's employees and representatives shall comply with the specific applicable requirements of Contractor's safety programs of which Owner has been informed.

B. Owner shall furnish copies of any applicable Owner safety programs to Contractor.

ARTICLE 10 – ENGINEER'S STATUS DURING CONSTRUCTION

10.01 Owner's Representative

A. Engineer will be Owner's representative during the construction period. The duties and responsibilities and the limitations of authority of Engineer as Owner's representative during construction are set forth in the Contract.

10.02 Visits to Site

A. Engineer will make visits to the Site at intervals appropriate to the various stages of construction as Engineer deems necessary in order to observe as an experienced and qualified design professional the progress that has been made and the quality of the various aspects of Contractor's executed Work. Based on information obtained during such visits and observations, Engineer, for the benefit of Owner, will determine, in general, if the Work is proceeding in accordance with the Contract Documents. Engineer will not be required to make exhaustive or continuous inspections on the Site to check the quality or quantity of the Work. Engineer's efforts will be directed toward providing for Owner a greater degree of confidence that the completed Work will conform generally to the Contract Documents. On the basis of such visits and observations, Engineer will keep Owner informed of the progress of the Work and will endeavor to guard Owner against defective Work.

B. Engineer's visits and observations are subject to all the limitations on Engineer's authority and responsibility set forth in Paragraph 10.08. Particularly, but without limitation, during or as a result of Engineer's visits or observations of Contractor's Work, Engineer will not supervise,

direct, control, or have authority over or be responsible for Contractor's means, methods, techniques, sequences, or procedures of construction, or the safety precautions and programs incident thereto, or for any failure of Contractor to comply with Laws and Regulations applicable to the performance of the Work.

10.03 Project Representative

A. If Owner and Engineer have agreed that Engineer will furnish a Resident Project Representative to represent Engineer at the Site and assist Engineer in observing the progress and quality of the Work, then the authority and responsibilities of any such Resident Project Representative will be as provided in the Supplementary Conditions, and limitations on the responsibilities thereof will be as provided in Paragraph 10.08. If Owner designates another representative or agent to represent Owner at the Site who is not Engineer's consultant, agent, or employee, the responsibilities and authority and limitations thereon of such other individual or entity will be as provided in the Supplementary Conditions.

10.04 Rejecting Defective Work

A. Engineer has the authority to reject Work in accordance with Article 14.

10.05 Shop Drawings, Change Orders and Payments

A. Engineer's authority, and limitations thereof, as to Shop Drawings and Samples, are set forth in Paragraph 7.16.

B. Engineer's authority, and limitations thereof, as to design calculations and design drawings submitted in response to a delegation of professional design services, if any, are set forth in Paragraph 7.19.

C. Engineer's authority as to Change Orders is set forth in Article 11.

D. Engineer's authority as to Applications for Payment is set forth in Article 15.

10.06 Determinations for Unit Price Work

A. Engineer will determine the actual quantities and classifications of Unit Price Work performed by Contractor as set forth in Paragraph 13.03.

10.07 Decisions on Requirements of Contract Documents and Acceptability of Work

A. Engineer will render decisions regarding the requirements of the Contract Documents, and judge the acceptability of the Work, pursuant to the specific procedures set forth herein for initial interpretations, Change Proposals, and acceptance of the Work. In rendering such decisions and judgments, Engineer will not show partiality to Owner or Contractor, and will not be liable to Owner, Contractor, or others in connection with any proceedings, interpretations, decisions, or judgments conducted or rendered in good faith.

10.08 Limitations on Engineer's Authority and Responsibilities

A. Neither Engineer's authority or responsibility under this Article 10 or under any other provision of the Contract, nor any decision made by Engineer in good faith either to exercise or not exercise such authority or responsibility or the undertaking, exercise, or performance of any authority or responsibility by Engineer, shall create, impose, or give rise to any duty in contract, tort, or otherwise owed by Engineer to Contractor, any Subcontractor, any Supplier, any other individual or entity, or to any surety for or employee or agent of any of them.

B. Engineer will not supervise, direct, control, or have authority over or be responsible for Contractor's means, methods, techniques, sequences, or procedures of construction, or the safety precautions and programs incident thereto, or for any failure of Contractor to comply with Laws and Regulations applicable to the performance of the Work. Engineer will not be responsible for Contractor's failure to perform the Work in accordance with the Contract Documents.

C. Engineer will not be responsible for the acts or omissions of Contractor or of any Subcontractor, any Supplier, or of any other individual or entity performing any of the Work.

D. Engineer's review of the final Application for Payment and accompanying documentation and all maintenance and operating instructions, schedules, guarantees, bonds, certificates of inspection, tests and approvals, and other documentation required to be delivered by Paragraph 15.06.A will only be to determine generally that their content complies with the requirements of, and in the case of certificates of inspections, tests, and approvals, that the results certified indicate compliance with the Contract Documents.

E. The limitations upon authority and responsibility set forth in this Paragraph 10.08 shall also apply to the Resident Project Representative, if any.

10.09 Compliance with Safety Program

A. While at the Site, Engineer's employees and representatives will comply with the specific applicable requirements of Owner's and Contractor's safety programs (if any) of which Engineer has been informed.

ARTICLE 11 – AMENDING THE CONTRACT DOCUMENTS; CHANGES IN THE WORK

11.01 Amending and Supplementing Contract Documents

A. The Contract Documents may be amended or supplemented by a Change Order, a Work Change Directive, or a Field Order.

1. Change Orders:

a. If an amendment or supplement to the Contract Documents includes a change in the Contract Price or the Contract Times, such amendment or supplement must be set forth in a Change Order. A Change Order also may be used to establish amendments and supplements of the Contract Documents that do not affect the Contract Price or Contract Times.

b. Owner and Contractor may amend those terms and conditions of the Contract Documents that do not involve (1) the performance or acceptability of the Work, (2) the design (as set forth in the Drawings, Specifications, or otherwise), or (3) other engineering or technical matters, without the recommendation of the Engineer. Such an amendment shall be set forth in a Change Order.

2. Work Change Directives: A Work Change Directive will not change the Contract Price or the Contract Times but is evidence that the parties expect that the modification ordered or documented by a Work Change Directive will be incorporated in a subsequently issued Change Order, following negotiations by the parties as to the Work Change Directive's effect, if any, on the Contract Price and Contract Times; or, if negotiations are unsuccessful, by a determination under the terms of the Contract Documents governing adjustments, expressly including Paragraph 11.04 regarding change of Contract Price. Contractor must submit any Change Proposal seeking an adjustment of the Contract Price or the Contract Times, or both, no later than 30 days after the completion of the Work set out in the Work Change Directive. Owner must submit any Claim seeking an adjustment of the Contract Price or the Contract Times, or both, no later than 60 days after issuance of the Work Change Directive.

3. Field Orders: Engineer may authorize minor changes in the Work if the changes do not involve an adjustment in the Contract Price or the Contract Times and are compatible with the design concept of the completed Project as a functioning whole as indicated by the Contract Documents. Such changes will be accomplished by a Field Order and will be binding on Owner and also on Contractor, which shall perform the Work involved promptly. If Contractor believes that a Field Order justifies an adjustment in the Contract Price or Contract Times, or both, then before proceeding with the Work at issue, Contractor shall submit a Change Proposal as provided herein.

11.02 Owner-Authorized Changes in the Work

A. Without invalidating the Contract and without notice to any surety, Owner may, at any time or from time to time, order additions, deletions, or revisions in the Work. Such changes shall be

supported by Engineer's recommendation, to the extent the change involves the design (as set forth in the Drawings, Specifications, or otherwise), or other engineering or technical matters. Such changes may be accomplished by a Change Order, if Owner and Contractor have agreed as to the effect, if any, of the changes on Contract Times or Contract Price; or by a Work Change Directive. Upon receipt of any such document, Contractor shall promptly proceed with the Work involved; or, in the case of a deletion in the Work, promptly cease construction activities with respect to such deleted Work. Added or revised Work shall be performed under the applicable conditions of the Contract Documents. Nothing in this paragraph shall obligate Contractor to undertake work that Contractor reasonably concludes cannot be performed in a manner consistent with Contractor's safety obligations under the Contract Documents or Laws and Regulations.

11.03 Unauthorized Changes in the Work

A. Contractor shall not be entitled to an increase in the Contract Price or an extension of the Contract Times with respect to any work performed that is not required by the Contract Documents, as amended, modified, or supplemented, except in the case of an emergency as provided in Paragraph 7.15 or in the case of uncovering Work as provided in Paragraph 14.05.

11.04 Change of Contract Price

A. The Contract Price may only be changed by a Change Order. Any Change Proposal for an adjustment in the Contract Price shall comply with the provisions of Paragraph 11.06. Any Claim for an adjustment of Contract Price shall comply with the provisions of Article 12.

B. An adjustment in the Contract Price will be determined as follows:

1. where the Work involved is covered by unit prices contained in the Contract Documents, then by application of such unit prices to the quantities of the items involved (subject to the provisions of Paragraph 13.03); or

2. where the Work involved is not covered by unit prices contained in the Contract Documents, then by a mutually agreed lump sum (which may include an allowance for overhead and profit not necessarily in accordance with Paragraph 11.04.C.2); or

3. where the Work involved is not covered by unit prices contained in the Contract Documents and the parties do not reach mutual agreement to a lump sum, then on the basis of the Cost of the Work (determined as provided in Paragraph 13.01) plus a Contractor's fee for overhead and profit (determined as provided in Paragraph 11.04.C).

C. Contractor's Fee: When applicable, the Contractor's fee for overhead and profit shall be determined as follows:

1. a mutually acceptable fixed fee; or

2. if a fixed fee is not agreed upon, then a fee based on the following percentages of the various portions of the Cost of the Work:

a. for costs incurred under Paragraphs 13.01.B.1 and 13.01.B.2, the Contractor's fee shall be 15 percent;

b. for costs incurred under Paragraph 13.01.B.3, the Contractor's fee shall be five percent;

c. where one or more tiers of subcontracts are on the basis of Cost of the Work plus a fee and no fixed fee is agreed upon, the intent of Paragraphs 11.01.C.2.a and 11.01.C.2.b is that the Contractor's fee shall be based on: (1) a fee of 15 percent of the costs incurred under Paragraphs 13.01.A.1 and 13.01.A.2 by the Subcontractor that actually performs the Work, at whatever tier, and (2) with respect to Contractor itself and to any Subcontractors of a tier higher than that of the Subcontractor that actually performs the Work, a fee of five percent of the amount (fee plus underlying costs incurred) attributable to the next lower tier Subcontractor; provided, however, that for any such subcontracted work the maximum total fee to be paid by Owner

shall be no greater than 27 percent of the costs incurred by the Subcontractor that actually performs the work;

d. no fee shall be payable on the basis of costs itemized under Paragraphs 13.01.B.4, 13.01.B.5, and 13.01.C;

e. the amount of credit to be allowed by Contractor to Owner for any change which results in a net decrease in cost will be the amount of the actual net decrease in cost plus a deduction in Contractor's fee by an amount equal to five percent of such net decrease; and

f. when both additions and credits are involved in any one change, the adjustment in Contractor's fee shall be computed on the basis of the net change in accordance with Paragraphs 11.04.C.2.a through 11.04.C.2.e, inclusive.

11.05 Change of Contract Times

A. The Contract Times may only be changed by a Change Order. Any Change Proposal for an adjustment in the Contract Times shall comply with the provisions of Paragraph 11.06. Any Claim for an adjustment in the Contract Times shall comply with the provisions of Article 12.

B. An adjustment of the Contract Times shall be subject to the limitations set forth in Paragraph 4.05, concerning delays in Contractor's progress.

11.06 Change Proposals

A. Contractor shall submit a Change Proposal to Engineer to request an adjustment in the Contract Times or Contract Price; appeal an initial decision by Engineer concerning the requirements of the Contract Documents or relating to the acceptability of the Work under the Contract Documents; contest a set-off against payment due; or seek other relief under the Contract. The Change Proposal shall specify any proposed change in Contract Times or Contract Price, or both, or other proposed relief, and explain the reason for the proposed change, with citations to any governing or applicable provisions of the Contract Documents.

1. Procedures: Contractor shall submit each Change Proposal to Engineer promptly (but in no event later than 30 days) after the start of the event giving rise thereto, or after such initial decision. The Contractor shall submit supporting data, including the proposed change in Contract Price or Contract Time (if any), to the Engineer and Owner within 15 days after the submittal of the Change Proposal. The supporting data shall be accompanied by a written statement that the supporting data are accurate and complete, and that any requested time or price adjustment is the entire adjustment to which Contractor believes it is entitled as a result of said event. Engineer will advise Owner regarding the Change Proposal, and consider any comments or response from Owner regarding the Change Proposal.

2. Engineer's Action: Engineer will review each Change Proposal and, within 30 days after receipt of the Contractor's supporting data, either deny the Change Proposal in whole, approve it in whole, or deny it in part and approve it in part. Such actions shall be in writing, with a copy provided to Owner and Contractor. If Engineer does not take action on the Change Proposal within 30 days, then either Owner or Contractor may at any time thereafter submit a letter to the other party indicating that as a result of Engineer's inaction the Change Proposal is deemed denied, thereby commencing the time for appeal of the denial under Article 12.

3. Binding Decision: Engineer's decision will be final and binding upon Owner and Contractor, unless Owner or Contractor appeals the decision by filing a Claim under Article 12.

B. Resolution of Certain Change Proposals: If the Change Proposal does not involve the design (as set forth in the Drawings, Specifications, or otherwise), the acceptability of the Work, or other engineering or technical matters, then Engineer will notify the parties that the Engineer is unable to resolve the Change Proposal. For purposes of further resolution of such a Change Proposal, such notice shall be deemed a denial, and Contractor may choose to seek resolution under the terms of Article 12.

11.07 Execution of Change Orders

A. Owner and Contractor shall execute appropriate Change Orders covering:

1. changes in the Contract Price or Contract Times which are agreed to by the parties, including any undisputed sum or amount of time for Work actually performed in accordance with a Work Change Directive;

2. changes in Contract Price resulting from an Owner set-off, unless Contractor has duly contested such set-off;

3. changes in the Work which are: (a) ordered by Owner pursuant to Paragraph 11.02, (b) required because of Owner's acceptance of defective Work under Paragraph 14.04 or Owner's correction of defective Work under Paragraph 14.07, or (c) agreed to by the parties, subject to the need for Engineer's recommendation if the change in the Work involves the design (as set forth in the Drawings, Specifications, or otherwise), or other engineering or technical matters; and

4. changes in the Contract Price or Contract Times, or other changes, which embody the substance of any final and binding results under Paragraph 11.06, or Article 12.

B. If Owner or Contractor refuses to execute a Change Order that is required to be executed under the terms of this Paragraph 11.07, it shall be deemed to be of full force and effect, as if fully executed.

11.08 Notification to Surety

A. If the provisions of any bond require notice to be given to a surety of any change affecting the general scope of the Work or the provisions of the Contract Documents (including, but not limited to, Contract Price or Contract Times), the giving of any such notice will be Contractor's responsibility. The amount of each applicable bond will be adjusted to reflect the effect of any such change.

ARTICLE 12 – CLAIMS

12.01 Claims

A. Claims Process: The following disputes between Owner and Contractor shall be submitted to the Claims process set forth in this Article:

1. Appeals by Owner or Contractor of Engineer's decisions regarding Change Proposals;

2. Owner demands for adjustments in the Contract Price or Contract Times, or other relief under the Contract Documents; and

3. Disputes that Engineer has been unable to address because they do not involve the design (as set forth in the Drawings, Specifications, or otherwise), the acceptability of the Work, or other engineering or technical matters.

B. Submittal of Claim: The party submitting a Claim shall deliver it directly to the other party to the Contract promptly (but in no event later than 30 days) after the start of the event giving rise thereto; in the case of appeals regarding Change Proposals within 30 days of the decision under appeal. The party submitting the Claim shall also furnish a copy to the Engineer, for its information only. The responsibility to substantiate a Claim shall rest with the party making the Claim. In the case of a Claim by Contractor seeking an increase in the Contract Times or Contract Price, or both, Contractor shall certify that the Claim is made in good faith, that the supporting data are accurate and complete, and that to the best of Contractor's knowledge and belief the amount of time or money requested accurately reflects the full amount to which Contractor is entitled.

C. Review and Resolution: The party receiving a Claim shall review it thoroughly, giving full consideration to its merits. The two parties shall seek to resolve the Claim through the exchange of information and direct negotiations. The parties may extend the time for resolving

the Claim by mutual agreement. All actions taken on a Claim shall be stated in writing and submitted to the other party, with a copy to Engineer.

D. Mediation:

1. At any time after initiation of a Claim, Owner and Contractor may mutually agree to mediation of the underlying dispute. The agreement to mediate shall stay the Claim submittal and response process.

2. If Owner and Contractor agree to mediation, then after 60 days from such agreement, either Owner or Contractor may unilaterally terminate the mediation process, and the Claim submittal and decision process shall resume as of the date of the termination. If the mediation proceeds but is unsuccessful in resolving the dispute, the Claim submittal and decision process shall resume as of the date of the conclusion of the mediation, as determined by the mediator.

3. Owner and Contractor shall each pay one-half of the mediator's fees and costs.

E. Partial Approval: If the party receiving a Claim approves the Claim in part and denies it in part, such action shall be final and binding unless within 30 days of such action the other party invokes the procedure set forth in Article 17 for final resolution of disputes.

F. Denial of Claim: If efforts to resolve a Claim are not successful, the party receiving the Claim may deny it by giving written notice of denial to the other party. If the receiving party does not take action on the Claim within 90 days, then either Owner or Contractor may at any time thereafter submit a letter to the other party indicating that as a result of the inaction, the Claim is deemed denied, thereby commencing the time for appeal of the denial. A denial of the Claim shall be final and binding unless within 30 days of the denial the other party invokes the procedure set forth in Article 17 for the final resolution of disputes.

G. Final and Binding Results: If the parties reach a mutual agreement regarding a Claim, whether through approval of the Claim, direct negotiations, mediation, or otherwise; or if a Claim is approved in part and denied in part, or denied in full, and such actions become final and binding; then the results of the agreement or action on the Claim shall be incorporated in a Change Order to the extent they affect the Contract, including the Work, the Contract Times, or the Contract Price.

ARTICLE 13 – COST OF THE WORK; ALLOWANCES; UNIT PRICE WORK

13.01 Cost of the Work

A. Purposes for Determination of Cost of the Work: The term Cost of the Work means the sum of all costs necessary for the proper performance of the Work at issue, as further defined below. The provisions of this Paragraph 13.01 are used for two distinct purposes:

1. To determine Cost of the Work when Cost of the Work is a component of the Contract Price, under cost-plus-fee, time-and-materials, or other cost-based terms; or

2. To determine the value of a Change Order, Change Proposal, Claim, set-off, or other adjustment in Contract Price. When the value of any such adjustment is determined on the basis of Cost of the Work, Contractor is entitled only to those additional or incremental costs required because of the change in the Work or because of the event giving rise to the adjustment.

B. Costs Included: Except as otherwise may be agreed to in writing by Owner, costs included in the Cost of the Work shall be in amounts no higher than those prevailing in the locality of the Project, shall not include any of the costs itemized in Paragraph 13.01.C, and shall include only the following items:

1. Payroll costs for employees in the direct employ of Contractor in the performance of the Work under schedules of job classifications agreed upon by Owner and Contractor. Such employees shall include, without limitation, superintendents, foremen, and other personnel employed full time on the Work. Payroll costs for employees not employed full

time on the Work shall be apportioned on the basis of their time spent on the Work. Payroll costs shall include, but not be limited to, salaries and wages plus the cost of fringe benefits, which shall include social security contributions, unemployment, excise, and payroll taxes, workers' compensation, health and retirement benefits, bonuses, sick leave, and vacation and holiday pay applicable thereto. The expenses of performing Work outside of regular working hours, on Saturday, Sunday, or legal holidays, shall be included in the above to the extent authorized by Owner.

2. Cost of all materials and equipment furnished and incorporated in the Work, including costs of transportation and storage thereof, and Suppliers' field services required in connection therewith. All cash discounts shall accrue to Contractor unless Owner deposits funds with Contractor with which to make payments, in which case the cash discounts shall accrue to Owner. All trade discounts, rebates, and refunds and returns from sale of surplus materials and equipment shall accrue to Owner, and Contractor shall make provisions so that they may be obtained.

3. Payments made by Contractor to Subcontractors for Work performed by Subcontractors. If required by Owner, Contractor shall obtain competitive bids from subcontractors acceptable to Owner and Contractor and shall deliver such bids to Owner, who will then determine, with the advice of Engineer, which bids, if any, will be acceptable. If any subcontract provides that the Subcontractor is to be paid on the basis of Cost of the Work plus a fee, the Subcontractor's Cost of the Work and fee shall be determined in the same manner as Contractor's Cost of the Work and fee as provided in this Paragraph 13.01.

4. Costs of special consultants (including but not limited to engineers, architects, testing laboratories, surveyors, attorneys, and accountants) employed for services specifically related to the Work.

5. Supplemental costs including the following:

    a. The proportion of necessary transportation, travel, and subsistence expenses of Contractor's employees incurred in discharge of duties connected with the Work.

    b. Cost, including transportation and maintenance, of all materials, supplies, equipment, machinery, appliances, office, and temporary facilities at the Site, and hand tools not owned by the workers, which are consumed in the performance of the Work, and cost, less market value, of such items used but not consumed which remain the property of Contractor.

    c. Rentals of all construction equipment and machinery, and the parts thereof, whether rented from Contractor or others in accordance with rental agreements approved by Owner with the advice of Engineer, and the costs of transportation, loading, unloading, assembly, dismantling, and removal thereof. All such costs shall be in accordance with the terms of said rental agreements. The rental of any such equipment, machinery, or parts shall cease when the use thereof is no longer necessary for the Work.

    d. Sales, consumer, use, and other similar taxes related to the Work, and for which Contractor is liable, as imposed by Laws and Regulations.

    e. Deposits lost for causes other than negligence of Contractor, any Subcontractor, or anyone directly or indirectly employed by any of them or for whose acts any of them may be liable, and royalty payments and fees for permits and licenses.

    f. Losses and damages (and related expenses) caused by damage to the Work, not compensated by insurance or otherwise, sustained by Contractor in connection with the performance of the Work (except losses and damages within the deductible amounts of property insurance established in accordance with Paragraph 6.05), provided such losses and damages have resulted from causes other than the negligence of Contractor, any Subcontractor, or anyone directly or indirectly employed by any of them or for whose acts any of them may be liable. Such losses shall include settlements made with the written consent and approval of Owner. No

such losses, damages, and expenses shall be included in the Cost of the Work for the purpose of determining Contractor's fee.

g. The cost of utilities, fuel, and sanitary facilities at the Site.

h. Minor expenses such as communication service at the Site, express and courier services, and similar petty cash items in connection with the Work.

i. The costs of premiums for all bonds and insurance that Contractor is required by the Contract Documents to purchase and maintain.

C. Costs Excluded: The term Cost of the Work shall not include any of the following items:

1. Payroll costs and other compensation of Contractor's officers, executives, principals (of partnerships and sole proprietorships), general managers, safety managers, engineers, architects, estimators, attorneys, auditors, accountants, purchasing and contracting agents, expediters, timekeepers, clerks, and other personnel employed by Contractor, whether at the Site or in Contractor's principal or branch office for general administration of the Work and not specifically included in the agreed upon schedule of job classifications referred to in Paragraph 13.01.B.1 or specifically covered by Paragraph 13.01.B.4. The payroll costs and other compensation excluded here are to be considered administrative costs covered by the Contractor's fee.

2. Expenses of Contractor's principal and branch offices other than Contractor's office at the Site.

3. Any part of Contractor's capital expenses, including interest on Contractor's capital employed for the Work and charges against Contractor for delinquent payments.

4. Costs due to the negligence of Contractor, any Subcontractor, or anyone directly or indirectly employed by any of them or for whose acts any of them may be liable, including but not limited to, the correction of defective Work, disposal of materials or equipment wrongly supplied, and making good any damage to property.

5. Other overhead or general expense costs of any kind and the costs of any item not specifically and expressly included in Paragraph 13.01.B.

D. Contractor's Fee: When the Work as a whole is performed on the basis of cost-plus, Contractor's fee shall be determined as set forth in the Agreement. When the value of any Work covered by a Change Order, Change Proposal, Claim, set-off, or other adjustment in Contract Price is determined on the basis of Cost of the Work, Contractor's fee shall be determined as set forth in Paragraph 11.04.C.

E. Documentation: Whenever the Cost of the Work for any purpose is to be determined pursuant to this Article 13, Contractor will establish and maintain records thereof in accordance with generally accepted accounting practices and submit in a form acceptable to Engineer an itemized cost breakdown together with supporting data.

13.02 Allowances

A. It is understood that Contractor has included in the Contract Price all allowances so named in the Contract Documents and shall cause the Work so covered to be performed for such sums and by such persons or entities as may be acceptable to Owner and Engineer.

B. Cash Allowances: Contractor agrees that:

1. the cash allowances include the cost to Contractor (less any applicable trade discounts) of materials and equipment required by the allowances to be delivered at the Site, and all applicable taxes; and

2. Contractor's costs for unloading and handling on the Site, labor, installation, overhead, profit, and other expenses contemplated for the cash allowances have been included in the Contract Price and not in the allowances, and no demand for additional payment on account of any of the foregoing will be valid.

C. Contingency Allowance: Contractor agrees that a contingency allowance, if any, is for the sole use of Owner to cover unanticipated costs.

D. Prior to final payment, an appropriate Change Order will be issued as recommended by Engineer to reflect actual amounts due Contractor on account of Work covered by allowances, and the Contract Price shall be correspondingly adjusted.

13.03 Unit Price Work

A. Where the Contract Documents provide that all or part of the Work is to be Unit Price Work, initially the Contract Price will be deemed to include for all Unit Price Work an amount equal to the sum of the unit price for each separately identified item of Unit Price Work times the estimated quantity of each item as indicated in the Agreement.

B. The estimated quantities of items of Unit Price Work are not guaranteed and are solely for the purpose of comparison of Bids and determining an initial Contract Price. Payments to Contractor for Unit Price Work will be based on actual quantities.

C. Each unit price will be deemed to include an amount considered by Contractor to be adequate to cover Contractor's overhead and profit for each separately identified item.

D. Engineer will determine the actual quantities and classifications of Unit Price Work performed by Contractor. Engineer will review with Contractor the Engineer's preliminary determinations on such matters before rendering a written decision thereon (by recommendation of an Application for Payment or otherwise). Engineer's written decision thereon will be final and binding (except as modified by Engineer to reflect changed factual conditions or more accurate data) upon Owner and Contractor, subject to the provisions of the following paragraph.

E. Within 30 days of Engineer's written decision under the preceding paragraph, Contractor may submit a Change Proposal, or Owner may file a Claim, seeking an adjustment in the Contract Price if:

1. the quantity of any item of Unit Price Work performed by Contractor differs materially and significantly from the estimated quantity of such item indicated in the Agreement;

2. there is no corresponding adjustment with respect to any other item of Work; and

3. Contractor believes that it is entitled to an increase in Contract Price as a result of having incurred additional expense or Owner believes that Owner is entitled to a decrease in Contract Price, and the parties are unable to agree as to the amount of any such increase or decrease.

ARTICLE 14 – TESTS AND INSPECTIONS; CORRECTION, REMOVAL OR ACCEPTANCE OF DEFECTIVE WORK

14.01 Access to Work

A. Owner, Engineer, their consultants and other representatives and personnel of Owner, independent testing laboratories, and authorities having jurisdiction will have access to the Site and the Work at reasonable times for their observation, inspection, and testing. Contractor shall provide them proper and safe conditions for such access and advise them of Contractor's safety procedures and programs so that they may comply therewith as applicable.

14.02 Tests, Inspections, and Approvals

A. Contractor shall give Engineer timely notice of readiness of the Work (or specific parts thereof) for all required inspections and tests, and shall cooperate with inspection and testing personnel to facilitate required inspections and tests.

B. Owner shall retain and pay for the services of an independent inspector, testing laboratory, or other qualified individual or entity to perform all inspections and tests expressly required by the Contract Documents to be furnished and paid for by Owner, except that costs incurred in connection with tests or inspections of covered Work shall be governed by the provisions of Paragraph 14.05.

C. If Laws or Regulations of any public body having jurisdiction require any Work (or part thereof) specifically to be inspected, tested, or approved by an employee or other representative of such public body, Contractor shall assume full responsibility for arranging and obtaining such inspections, tests, or approvals, pay all costs in connection therewith, and furnish Engineer the required certificates of inspection or approval.

D. Contractor shall be responsible for arranging, obtaining, and paying for all inspections and tests required:

1. by the Contract Documents, unless the Contract Documents expressly allocate responsibility for a specific inspection or test to Owner;

2. to attain Owner's and Engineer's acceptance of materials or equipment to be incorporated in the Work;

3. by manufacturers of equipment furnished under the Contract Documents;

4. for testing, adjusting, and balancing of mechanical, electrical, and other equipment to be incorporated into the Work; and

5. for acceptance of materials, mix designs, or equipment submitted for approval prior to Contractor's purchase thereof for incorporation in the Work.

Such inspections and tests shall be performed by independent inspectors, testing laboratories, or other qualified individuals or entities acceptable to Owner and Engineer.

E. If the Contract Documents require the Work (or part thereof) to be approved by Owner, Engineer, or another designated individual or entity, then Contractor shall assume full responsibility for arranging and obtaining such approvals.

F. If any Work (or the work of others) that is to be inspected, tested, or approved is covered by Contractor without written concurrence of Engineer, Contractor shall, if requested by Engineer, uncover such Work for observation. Such uncovering shall be at Contractor's expense unless Contractor had given Engineer timely notice of Contractor's intention to cover the same and Engineer had not acted with reasonable promptness in response to such notice.

14.03 Defective Work

A. Contractor's Obligation: It is Contractor's obligation to assure that the Work is not defective.

B. Engineer's Authority: Engineer has the authority to determine whether Work is defective, and to reject defective Work.

C. Notice of Defects: Prompt notice of all defective Work of which Owner or Engineer has actual knowledge will be given to Contractor.

D. Correction, or Removal and Replacement: Promptly after receipt of written notice of defective Work, Contractor shall correct all such defective Work, whether or not fabricated, installed, or completed, or, if Engineer has rejected the defective Work, remove it from the Project and replace it with Work that is not defective.

E. Preservation of Warranties: When correcting defective Work, Contractor shall take no action that would void or otherwise impair Owner's special warranty and guarantee, if any, on said Work.

F. Costs and Damages: In addition to its correction, removal, and replacement obligations with respect to defective Work, Contractor shall pay all claims, costs, losses, and damages arising out of or relating to defective Work, including but not limited to the cost of the inspection, testing, correction, removal, replacement, or reconstruction of such defective Work, fines levied against Owner by governmental authorities because the Work is defective, and the costs of repair or replacement of work of others resulting from defective Work. Prior to final payment, if Owner and Contractor are unable to agree as to the measure of such claims, costs, losses, and damages resulting from defective Work, then Owner may impose a reasonable set-off against payments due under Article 15.

14.04 Acceptance of Defective Work

A. If, instead of requiring correction or removal and replacement of defective Work, Owner prefers to accept it, Owner may do so (subject, if such acceptance occurs prior to final payment, to Engineer's confirmation that such acceptance is in general accord with the design intent and applicable engineering principles, and will not endanger public safety). Contractor shall pay all claims, costs, losses, and damages attributable to Owner's evaluation of and determination to accept such defective Work (such costs to be approved by Engineer as to reasonableness), and for the diminished value of the Work to the extent not otherwise paid by Contractor. If any such acceptance occurs prior to final payment, the necessary revisions in the Contract Documents with respect to the Work shall be incorporated in a Change Order. If the parties are unable to agree as to the decrease in the Contract Price, reflecting the diminished value of Work so accepted, then Owner may impose a reasonable set-off against payments due under Article 15. If the acceptance of defective Work occurs after final payment, Contractor shall pay an appropriate amount to Owner.

14.05 Uncovering Work

A. Engineer has the authority to require special inspection or testing of the Work, whether or not the Work is fabricated, installed, or completed.

B. If any Work is covered contrary to the written request of Engineer, then Contractor shall, if requested by Engineer, uncover such Work for Engineer's observation, and then replace the covering, all at Contractor's expense.

C. If Engineer considers it necessary or advisable that covered Work be observed by Engineer or inspected or tested by others, then Contractor, at Engineer's request, shall uncover, expose, or otherwise make available for observation, inspection, or testing as Engineer may require, that portion of the Work in question, and provide all necessary labor, material, and equipment.

1. If it is found that the uncovered Work is defective, Contractor shall be responsible for all claims, costs, losses, and damages arising out of or relating to such uncovering, exposure, observation, inspection, and testing, and of satisfactory replacement or reconstruction (including but not limited to all costs of repair or replacement of work of others); and pending Contractor's full discharge of this responsibility the Owner shall be entitled to impose a reasonable set-off against payments due under Article 15.

2. If the uncovered Work is not found to be defective, Contractor shall be allowed an increase in the Contract Price or an extension of the Contract Times, or both, directly attributable to such uncovering, exposure, observation, inspection, testing, replacement, and reconstruction. If the parties are unable to agree as to the amount or extent thereof, then Contractor may submit a Change Proposal within 30 days of the determination that the Work is not defective.

14.06 Owner May Stop the Work

A. If the Work is defective, or Contractor fails to supply sufficient skilled workers or suitable materials or equipment, or fails to perform the Work in such a way that the completed Work will conform to the Contract Documents, then Owner may order Contractor to stop the Work, or any portion thereof, until the cause for such order has been eliminated; however, this right of Owner to stop the Work shall not give rise to any duty on the part of Owner to exercise this right for the benefit of Contractor, any Subcontractor, any Supplier, any other individual or entity, or any surety for, or employee or agent of any of them.

14.07 Owner May Correct Defective Work

A. If Contractor fails within a reasonable time after written notice from Engineer to correct defective Work, or to remove and replace rejected Work as required by Engineer, or if Contractor fails to perform the Work in accordance with the Contract Documents, or if Contractor fails to comply with any other provision of the Contract Documents, then Owner may, after seven days written notice to Contractor, correct or remedy any such deficiency.

B. In exercising the rights and remedies under this Paragraph 14.07, Owner shall proceed expeditiously. In connection with such corrective or remedial action, Owner may exclude Contractor from all or part of the Site, take possession of all or part of the Work and suspend Contractor's services related thereto, and incorporate in the Work all materials and equipment stored at the Site or for which Owner has paid Contractor but which are stored elsewhere. Contractor shall allow Owner, Owner's representatives, agents and employees, Owner's other contractors, and Engineer and Engineer's consultants access to the Site to enable Owner to exercise the rights and remedies under this paragraph.

C. All claims, costs, losses, and damages incurred or sustained by Owner in exercising the rights and remedies under this Paragraph 14.07 will be charged against Contractor as set-offs against payments due under Article 15. Such claims, costs, losses and damages will include but not be limited to all costs of repair, or replacement of work of others destroyed or damaged by correction, removal, or replacement of Contractor's defective Work.

D. Contractor shall not be allowed an extension of the Contract Times because of any delay in the performance of the Work attributable to the exercise by Owner of Owner's rights and remedies under this Paragraph 14.07.

ARTICLE 15 – PAYMENTS TO CONTRACTOR; SET-OFFS; COMPLETION; CORRECTION PERIOD

15.01 Progress Payments

A. Basis for Progress Payments: The Schedule of Values established as provided in Article 2 will serve as the basis for progress payments and will be incorporated into a form of Application for Payment acceptable to Engineer. Progress payments on account of Unit Price Work will be based on the number of units completed during the pay period, as determined under the provisions of Paragraph 13.03. Progress payments for cost-based Work will be based on Cost of the Work completed by Contractor during the pay period.

B. Applications for Payments:

1. At least 20 days before the date established in the Agreement for each progress payment (but not more often than once a month), Contractor shall submit to Engineer for review an Application for Payment filled out and signed by Contractor covering the Work completed as of the date of the Application and accompanied by such supporting documentation as is required by the Contract Documents. If payment is requested on the basis of materials and equipment not incorporated in the Work but delivered and suitably stored at the Site or at another location agreed to in writing, the Application for Payment shall also be accompanied by a bill of sale, invoice, or other documentation warranting that Owner has received the materials and equipment free and clear of all Liens, and evidence that the materials and equipment are covered by appropriate property insurance, a warehouse bond, or other arrangements to protect Owner's interest therein, all of which must be satisfactory to Owner.

2. Beginning with the second Application for Payment, each Application shall include an affidavit of Contractor stating that all previous progress payments received on account of the Work have been applied on account to discharge Contractor's legitimate obligations associated with prior Applications for Payment.

3. The amount of retainage with respect to progress payments will be as stipulated in the Agreement.

C. Review of Applications:

1. Engineer will, within 10 days after receipt of each Application for Payment, including each resubmittal, either indicate in writing a recommendation of payment and present the Application to Owner, or return the Application to Contractor indicating in writing Engineer's reasons for refusing to recommend payment. In the latter case, Contractor may make the necessary corrections and resubmit the Application.

2. Engineer's recommendation of any payment requested in an Application for Payment will constitute a representation by Engineer to Owner, based on Engineer's observations of the executed Work as an experienced and qualified design professional, and on Engineer's review of the Application for Payment and the accompanying data and schedules, that to the best of Engineer's knowledge, information and belief:

    a. the Work has progressed to the point indicated;

    b. the quality of the Work is generally in accordance with the Contract Documents (subject to an evaluation of the Work as a functioning whole prior to or upon Substantial Completion, the results of any subsequent tests called for in the Contract Documents, a final determination of quantities and classifications for Unit Price Work under Paragraph 13.03, and any other qualifications stated in the recommendation); and

    c. the conditions precedent to Contractor's being entitled to such payment appear to have been fulfilled in so far as it is Engineer's responsibility to observe the Work.

3. By recommending any such payment Engineer will not thereby be deemed to have represented that:

    a. inspections made to check the quality or the quantity of the Work as it has been performed have been exhaustive, extended to every aspect of the Work in progress, or involved detailed inspections of the Work beyond the responsibilities specifically assigned to Engineer in the Contract; or

    b. there may not be other matters or issues between the parties that might entitle Contractor to be paid additionally by Owner or entitle Owner to withhold payment to Contractor.

4. Neither Engineer's review of Contractor's Work for the purposes of recommending payments nor Engineer's recommendation of any payment, including final payment, will impose responsibility on Engineer:

    a. to supervise, direct, or control the Work, or

    b. for the means, methods, techniques, sequences, or procedures of construction, or the safety precautions and programs incident thereto, or

    c. for Contractor's failure to comply with Laws and Regulations applicable to Contractor's performance of the Work, or

    d. to make any examination to ascertain how or for what purposes Contractor has used the money paid on account of the Contract Price, or

    e. to determine that title to any of the Work, materials, or equipment has passed to Owner free and clear of any Liens.

5. Engineer may refuse to recommend the whole or any part of any payment if, in Engineer's opinion, it would be incorrect to make the representations to Owner stated in Paragraph 15.01.C.2.

6. Engineer will recommend reductions in payment (set-offs) necessary in Engineer's opinion to protect Owner from loss because:

    a. the Work is defective, requiring correction or replacement;

    b. the Contract Price has been reduced by Change Orders;

    c. Owner has been required to correct defective Work in accordance with Paragraph 14.07, or has accepted defective Work pursuant to Paragraph 14.04;

    d. Owner has been required to remove or remediate a Hazardous Environmental Condition for which Contractor is responsible; or

e. Engineer has actual knowledge of the occurrence of any of the events that would constitute a default by Contractor and therefore justify termination for cause under the Contract Documents.

D. Payment Becomes Due:

1. Ten days after presentation of the Application for Payment to Owner with Engineer's recommendation, the amount recommended (subject to any Owner set-offs) will become due, and when due will be paid by Owner to Contractor.

E. Reductions in Payment by Owner:

1. In addition to any reductions in payment (set-offs) recommended by Engineer, Owner is entitled to impose a set-off against payment based on any of the following:

a. claims have been made against Owner on account of Contractor's conduct in the performance or furnishing of the Work, or Owner has incurred costs, losses, or damages on account of Contractor's conduct in the performance or furnishing of the Work, including but not limited to claims, costs, losses, or damages from workplace injuries, adjacent property damage, non-compliance with Laws and Regulations, and patent infringement;

b. Contractor has failed to take reasonable and customary measures to avoid damage, delay, disruption, and interference with other work at or adjacent to the Site;

c. Contractor has failed to provide and maintain required bonds or insurance;

d. Owner has been required to remove or remediate a Hazardous Environmental Condition for which Contractor is responsible;

e. Owner has incurred extra charges or engineering costs related to submittal reviews, evaluations of proposed substitutes, tests and inspections, or return visits to manufacturing or assembly facilities;

f. the Work is defective, requiring correction or replacement;

g. Owner has been required to correct defective Work in accordance with Paragraph 14.07, or has accepted defective Work pursuant to Paragraph 14.04;

h. the Contract Price has been reduced by Change Orders;

i. an event that would constitute a default by Contractor and therefore justify a termination for cause has occurred;

j. liquidated damages have accrued as a result of Contractor's failure to achieve Milestones, Substantial Completion, or final completion of the Work;

k. Liens have been filed in connection with the Work, except where Contractor has delivered a specific bond satisfactory to Owner to secure the satisfaction and discharge of such Liens;

l. there are other items entitling Owner to a set off against the amount recommended.

2. If Owner imposes any set-off against payment, whether based on its own knowledge or on the written recommendations of Engineer, Owner will give Contractor immediate written notice (with a copy to Engineer) stating the reasons for such action and the specific amount of the reduction, and promptly pay Contractor any amount remaining after deduction of the amount so withheld. Owner shall promptly pay Contractor the amount so withheld, or any adjustment thereto agreed to by Owner and Contractor, if Contractor remedies the reasons for such action. The reduction imposed shall be binding on Contractor unless it duly submits a Change Proposal contesting the reduction.

3. Upon a subsequent determination that Owner's refusal of payment was not justified, the amount wrongfully withheld shall be treated as an amount due as determined by Paragraph 15.01.C.1 and subject to interest as provided in the Agreement.

15.02 Contractor's Warranty of Title

A. Contractor warrants and guarantees that title to all Work, materials, and equipment furnished under the Contract will pass to Owner free and clear of (1) all Liens and other title defects, and (2) all patent, licensing, copyright, or royalty obligations, no later than seven days after the time of payment by Owner.

15.03 Substantial Completion

A. When Contractor considers the entire Work ready for its intended use Contractor shall notify Owner and Engineer in writing that the entire Work is substantially complete and request that Engineer issue a certificate of Substantial Completion. Contractor shall at the same time submit to Owner and Engineer an initial draft of punch list items to be completed or corrected before final payment.

B. Promptly after Contractor's notification, Owner, Contractor, and Engineer shall make an inspection of the Work to determine the status of completion. If Engineer does not consider the Work substantially complete, Engineer will notify Contractor in writing giving the reasons therefor.

C. If Engineer considers the Work substantially complete, Engineer will deliver to Owner a preliminary certificate of Substantial Completion which shall fix the date of Substantial Completion. Engineer shall attach to the certificate a punch list of items to be completed or corrected before final payment. Owner shall have seven days after receipt of the preliminary certificate during which to make written objection to Engineer as to any provisions of the certificate or attached punch list. If, after considering the objections to the provisions of the preliminary certificate, Engineer concludes that the Work is not substantially complete, Engineer will, within 14 days after submission of the preliminary certificate to Owner, notify Contractor in writing that the Work is not substantially complete, stating the reasons therefor. If Owner does not object to the provisions of the certificate, or if despite consideration of Owner's objections Engineer concludes that the Work is substantially complete, then Engineer will, within said 14 days, execute and deliver to Owner and Contractor a final certificate of Substantial Completion (with a revised punch list of items to be completed or corrected) reflecting such changes from the preliminary certificate as Engineer believes justified after consideration of any objections from Owner.

D. At the time of receipt of the preliminary certificate of Substantial Completion, Owner and Contractor will confer regarding Owner's use or occupancy of the Work following Substantial Completion, review the builder's risk insurance policy with respect to the end of the builder's risk coverage, and confirm the transition to coverage of the Work under a permanent property insurance policy held by Owner. Unless Owner and Contractor agree otherwise in writing, Owner shall bear responsibility for security, operation, protection of the Work, property insurance, maintenance, heat, and utilities upon Owner's use or occupancy of the Work.

E. After Substantial Completion the Contractor shall promptly begin work on the punch list of items to be completed or corrected prior to final payment. In appropriate cases Contractor may submit monthly Applications for Payment for completed punch list items, following the progress payment procedures set forth above.

F. Owner shall have the right to exclude Contractor from the Site after the date of Substantial Completion subject to allowing Contractor reasonable access to remove its property and complete or correct items on the punch list.

15.04 Partial Use or Occupancy

A. Prior to Substantial Completion of all the Work, Owner may use or occupy any substantially completed part of the Work which has specifically been identified in the Contract Documents, or which Owner, Engineer, and Contractor agree constitutes a separately functioning and usable part of the Work that can be used by Owner for its intended purpose without significant interference with Contractor's performance of the remainder of the Work, subject to the following conditions:

1. At any time Owner may request in writing that Contractor permit Owner to use or occupy any such part of the Work that Owner believes to be substantially complete. If and when Contractor agrees that such part of the Work is substantially complete, Contractor, Owner, and Engineer will follow the procedures of Paragraph 15.03.A through E for that part of the Work.

2. At any time Contractor may notify Owner and Engineer in writing that Contractor considers any such part of the Work substantially complete and request Engineer to issue a certificate of Substantial Completion for that part of the Work.

3. Within a reasonable time after either such request, Owner, Contractor, and Engineer shall make an inspection of that part of the Work to determine its status of completion. If Engineer does not consider that part of the Work to be substantially complete, Engineer will notify Owner and Contractor in writing giving the reasons therefor. If Engineer considers that part of the Work to be substantially complete, the provisions of Paragraph 15.03 will apply with respect to certification of Substantial Completion of that part of the Work and the division of responsibility in respect thereof and access thereto.

4. No use or occupancy or separate operation of part of the Work may occur prior to compliance with the requirements of Paragraph 6.05 regarding builder's risk or other property insurance.

15.05 Final Inspection

A. Upon written notice from Contractor that the entire Work or an agreed portion thereof is complete, Engineer will promptly make a final inspection with Owner and Contractor and will notify Contractor in writing of all particulars in which this inspection reveals that the Work, or agreed portion thereof, is incomplete or defective. Contractor shall immediately take such measures as are necessary to complete such Work or remedy such deficiencies.

15.06 Final Payment

A. Application for Payment:

1. After Contractor has, in the opinion of Engineer, satisfactorily completed all corrections identified during the final inspection and has delivered, in accordance with the Contract Documents, all maintenance and operating instructions, schedules, guarantees, bonds, certificates or other evidence of insurance, certificates of inspection, annotated record documents (as provided in Paragraph 7.11), and other documents, Contractor may make application for final payment.

2. The final Application for Payment shall be accompanied (except as previously delivered) by:

a. all documentation called for in the Contract Documents;

b. consent of the surety, if any, to final payment;

c. satisfactory evidence that all title issues have been resolved such that title to all Work, materials, and equipment has passed to Owner free and clear of any Liens or other title defects, or will so pass upon final payment.

d. a list of all disputes that Contractor believes are unsettled; and

e. complete and legally effective releases or waivers (satisfactory to Owner) of all Lien rights arising out of the Work, and of Liens filed in connection with the Work.

3. In lieu of the releases or waivers of Liens specified in Paragraph 15.06.A.2 and as approved by Owner, Contractor may furnish receipts or releases in full and an affidavit of Contractor that: (a) the releases and receipts include all labor, services, material, and equipment for which a Lien could be filed; and (b) all payrolls, material and equipment bills, and other indebtedness connected with the Work for which Owner might in any way be responsible, or which might in any way result in liens or other burdens on Owner's property, have been paid or otherwise satisfied. If any Subcontractor or Supplier fails to furnish such a release or receipt in full, Contractor may furnish a bond or other collateral

satisfactory to Owner to indemnify Owner against any Lien, or Owner at its option may issue joint checks payable to Contractor and specified Subcontractors and Suppliers.

B. Engineer's Review of Application and Acceptance:

1. If, on the basis of Engineer's observation of the Work during construction and final inspection, and Engineer's review of the final Application for Payment and accompanying documentation as required by the Contract Documents, Engineer is satisfied that the Work has been completed and Contractor's other obligations under the Contract have been fulfilled, Engineer will, within ten days after receipt of the final Application for Payment, indicate in writing Engineer's recommendation of final payment and present the Application for Payment to Owner for payment. Such recommendation shall account for any set-offs against payment that are necessary in Engineer's opinion to protect Owner from loss for the reasons stated above with respect to progress payments. At the same time Engineer will also give written notice to Owner and Contractor that the Work is acceptable, subject to the provisions of Paragraph 15.07. Otherwise, Engineer will return the Application for Payment to Contractor, indicating in writing the reasons for refusing to recommend final payment, in which case Contractor shall make the necessary corrections and resubmit the Application for Payment.

C. Completion of Work: The Work is complete (subject to surviving obligations) when it is ready for final payment as established by the Engineer's written recommendation of final payment.

D. Payment Becomes Due: Thirty days after the presentation to Owner of the final Application for Payment and accompanying documentation, the amount recommended by Engineer (less any further sum Owner is entitled to set off against Engineer's recommendation, including but not limited to set-offs for liquidated damages and set-offs allowed under the provisions above with respect to progress payments) will become due and shall be paid by Owner to Contractor.

15.07 Waiver of Claims

A. The making of final payment will not constitute a waiver by Owner of claims or rights against Contractor. Owner expressly reserves claims and rights arising from unsettled Liens, from defective Work appearing after final inspection pursuant to Paragraph 15.05, from Contractor's failure to comply with the Contract Documents or the terms of any special guarantees specified therein, from outstanding Claims by Owner, or from Contractor's continuing obligations under the Contract Documents.

B. The acceptance of final payment by Contractor will constitute a waiver by Contractor of all claims and rights against Owner other than those pending matters that have been duly submitted or appealed under the provisions of Article 17.

15.08 Correction Period

A. If within one year after the date of Substantial Completion (or such longer period of time as may be prescribed by the terms of any applicable special guarantee required by the Contract Documents, or by any specific provision of the Contract Documents), any Work is found to be defective, or if the repair of any damages to the Site, adjacent areas that Contractor has arranged to use through construction easements or otherwise, and other adjacent areas used by Contractor as permitted by Laws and Regulations, is found to be defective, then Contractor shall promptly, without cost to Owner and in accordance with Owner's written instructions:

1. correct the defective repairs to the Site or such other adjacent areas;

2. correct such defective Work;

3. if the defective Work has been rejected by Owner, remove it from the Project and replace it with Work that is not defective, and

4. satisfactorily correct or repair or remove and replace any damage to other Work, to the work of others, or to other land or areas resulting therefrom.

B. If Contractor does not promptly comply with the terms of Owner's written instructions, or in an emergency where delay would cause serious risk of loss or damage, Owner may have the

defective Work corrected or repaired or may have the rejected Work removed and replaced. Contractor shall pay all claims, costs, losses, and damages (including but not limited to all fees and charges of engineers, architects, attorneys, and other professionals and all court or arbitration or other dispute resolution costs) arising out of or relating to such correction or repair or such removal and replacement (including but not limited to all costs of repair or replacement of work of others).

C. In special circumstances where a particular item of equipment is placed in continuous service before Substantial Completion of all the Work, the correction period for that item may start to run from an earlier date if so provided in the Specifications.

D. Where defective Work (and damage to other Work resulting therefrom) has been corrected or removed and replaced under this paragraph, the correction period hereunder with respect to such Work will be extended for an additional period of one year after such correction or removal and replacement has been satisfactorily completed.

E. Contractor's obligations under this paragraph are in addition to all other obligations and warranties. The provisions of this paragraph shall not be construed as a substitute for, or a waiver of, the provisions of any applicable statute of limitation or repose.

ARTICLE 16 – SUSPENSION OF WORK AND TERMINATION

16.01 Owner May Suspend Work

A. At any time and without cause, Owner may suspend the Work or any portion thereof for a period of not more than 90 consecutive days by written notice to Contractor and Engineer. Such notice will fix the date on which Work will be resumed. Contractor shall resume the Work on the date so fixed. Contractor shall be entitled to an adjustment in the Contract Price or an extension of the Contract Times, or both, directly attributable to any such suspension. Any Change Proposal seeking such adjustments shall be submitted no later than 30 days after the date fixed for resumption of Work.

16.02 Owner May Terminate for Cause

A. The occurrence of any one or more of the following events will constitute a default by Contractor and justify termination for cause:

1. Contractor's persistent failure to perform the Work in accordance with the Contract Documents (including, but not limited to, failure to supply sufficient skilled workers or suitable materials or equipment or failure to adhere to the Progress Schedule);

2. Failure of Contractor to perform or otherwise to comply with a material term of the Contract Documents;

3. Contractor's disregard of Laws or Regulations of any public body having jurisdiction; or

4. Contractor's repeated disregard of the authority of Owner or Engineer.

B. If one or more of the events identified in Paragraph 16.02.A occurs, then after giving Contractor (and any surety) ten days written notice that Owner is considering a declaration that Contractor is in default and termination of the contract, Owner may proceed to:

1. declare Contractor to be in default, and give Contractor (and any surety) notice that the Contract is terminated; and

2. enforce the rights available to Owner under any applicable performance bond.

C. Subject to the terms and operation of any applicable performance bond, if Owner has terminated the Contract for cause, Owner may exclude Contractor from the Site, take possession of the Work, incorporate in the Work all materials and equipment stored at the Site or for which Owner has paid Contractor but which are stored elsewhere, and complete the Work as Owner may deem expedient.

D. Owner may not proceed with termination of the Contract under Paragraph 16.02.B if Contractor within seven days of receipt of notice of intent to terminate begins to correct its failure to perform and proceeds diligently to cure such failure.

E. If Owner proceeds as provided in Paragraph 16.02.B, Contractor shall not be entitled to receive any further payment until the Work is completed. If the unpaid balance of the Contract Price exceeds the cost to complete the Work, including all related claims, costs, losses, and damages (including but not limited to all fees and charges of engineers, architects, attorneys, and other professionals) sustained by Owner, such excess will be paid to Contractor. If the cost to complete the Work including such related claims, costs, losses, and damages exceeds such unpaid balance, Contractor shall pay the difference to Owner. Such claims, costs, losses, and damages incurred by Owner will be reviewed by Engineer as to their reasonableness and, when so approved by Engineer, incorporated in a Change Order. When exercising any rights or remedies under this paragraph, Owner shall not be required to obtain the lowest price for the Work performed.

F. Where Contractor's services have been so terminated by Owner, the termination will not affect any rights or remedies of Owner against Contractor then existing or which may thereafter accrue, or any rights or remedies of Owner against Contractor or any surety under any payment bond or performance bond. Any retention or payment of money due Contractor by Owner will not release Contractor from liability.

G. If and to the extent that Contractor has provided a performance bond under the provisions of Paragraph 6.01.A, the provisions of that bond shall govern over any inconsistent provisions of Paragraphs 16.02.B and 16.02.D.

16.03 Owner May Terminate For Convenience

A. Upon seven days written notice to Contractor and Engineer, Owner may, without cause and without prejudice to any other right or remedy of Owner, terminate the Contract. In such case, Contractor shall be paid for (without duplication of any items):

1. completed and acceptable Work executed in accordance with the Contract Documents prior to the effective date of termination, including fair and reasonable sums for overhead and profit on such Work;

2. expenses sustained prior to the effective date of termination in performing services and furnishing labor, materials, or equipment as required by the Contract Documents in connection with uncompleted Work, plus fair and reasonable sums for overhead and profit on such expenses; and

3. other reasonable expenses directly attributable to termination, including costs incurred to prepare a termination for convenience cost proposal.

B. Contractor shall not be paid on account of loss of anticipated overhead, profits, or revenue, or other economic loss arising out of or resulting from such termination.

16.04 Contractor May Stop Work or Terminate

A. If, through no act or fault of Contractor, (1) the Work is suspended for more than 90 consecutive days by Owner or under an order of court or other public authority, or (2) Engineer fails to act on any Application for Payment within 30 days after it is submitted, or (3) Owner fails for 30 days to pay Contractor any sum finally determined to be due, then Contractor may, upon seven days written notice to Owner and Engineer, and provided Owner or Engineer do not remedy such suspension or failure within that time, terminate the contract and recover from Owner payment on the same terms as provided in Paragraph 16.03.

B. In lieu of terminating the Contract and without prejudice to any other right or remedy, if Engineer has failed to act on an Application for Payment within 30 days after it is submitted, or Owner has failed for 30 days to pay Contractor any sum finally determined to be due, Contractor may, seven days after written notice to Owner and Engineer, stop the Work until payment is made of all such amounts due Contractor, including interest thereon. The provisions of this paragraph are not intended to preclude Contractor from submitting a Change

Proposal for an adjustment in Contract Price or Contract Times or otherwise for expenses or damage directly attributable to Contractor's stopping the Work as permitted by this paragraph.

ARTICLE 17 – FINAL RESOLUTION OF DISPUTES

17.01 Methods and Procedures

A. Disputes Subject to Final Resolution: The following disputed matters are subject to final resolution under the provisions of this Article:

1. A timely appeal of an approval in part and denial in part of a Claim, or of a denial in full; and

2. Disputes between Owner and Contractor concerning the Work or obligations under the Contract Documents, and arising after final payment has been made.

B. Final Resolution of Disputes: For any dispute subject to resolution under this Article, Owner or Contractor may:

1. elect in writing to invoke the dispute resolution process provided for in the Supplementary Conditions; or

2. agree with the other party to submit the dispute to another dispute resolution process; or

3. if no dispute resolution process is provided for in the Supplementary Conditions or mutually agreed to, give written notice to the other party of the intent to submit the dispute to a court of competent jurisdiction.

ARTICLE 18 – MISCELLANEOUS

18.01 Giving Notice

A. Whenever any provision of the Contract Documents requires the giving of written notice, it will be deemed to have been validly given if:

1. delivered in person, by a commercial courier service or otherwise, to the individual or to a member of the firm or to an officer of the corporation for which it is intended; or

2. delivered at or sent by registered or certified mail, postage prepaid, to the last business address known to the sender of the notice.

18.02 Computation of Times

A. When any period of time is referred to in the Contract by days, it will be computed to exclude the first and include the last day of such period. If the last day of any such period falls on a Saturday or Sunday or on a day made a legal holiday by the law of the applicable jurisdiction, such day will be omitted from the computation.

18.03 Cumulative Remedies

A. The duties and obligations imposed by these General Conditions and the rights and remedies available hereunder to the parties hereto are in addition to, and are not to be construed in any way as a limitation of, any rights and remedies available to any or all of them which are otherwise imposed or available by Laws or Regulations, by special warranty or guarantee, or by other provisions of the Contract. The provisions of this paragraph will be as effective as if repeated specifically in the Contract Documents in connection with each particular duty, obligation, right, and remedy to which they apply.

18.04 Limitation of Damages

A. With respect to any and all Change Proposals, Claims, disputes subject to final resolution, and other matters at issue, neither Owner nor Engineer, nor any of their officers, directors, members, partners, employees, agents, consultants, or subcontractors, shall be liable to Contractor for any claims, costs, losses, or damages sustained by Contractor on or in connection with any other project or anticipated project.

18.05 No Waiver

A. A party's non-enforcement of any provision shall not constitute a waiver of that provision, nor shall it affect the enforceability of that provision or of the remainder of this Contract.

18.06 Survival of Obligations

A. All representations, indemnifications, warranties, and guarantees made in, required by, or given in accordance with the Contract, as well as all continuing obligations indicated in the Contract, will survive final payment, completion, and acceptance of the Work or termination or completion of the Contract or termination of the services of Contractor.

18.07 Controlling Law

A. This Contract is to be governed by the law of the state in which the Project is located.

18.08 Headings

A. Article and paragraph headings are inserted for convenience only and do not constitute parts of these General Conditions.

END OF SECTION

"General Decision Number: SC20200039 01/03/2020

Superseded General Decision Number: SC20190039

State: South Carolina

Construction Type: Highway

Counties: Abbeville, Cherokee, Chester, Chesterfield, Clarendon, Dillon, Greenwood, Lancaster, Lee, Marion, Marlboro, McCormick, Oconee and Union Counties in South Carolina.

HIGHWAY CONSTRUCTION PROJECTS (excluding tunnels, building structures in rest area projects & railroad construction; bascule, suspension & spandrel arch bridges designed for commercial navigation, bridges involving marine construction; and other major bridges).

Note: Under Executive Order (EO) 13658, an hourly minimum wage of $10.80 for calendar year 2020 applies to all contracts subject to the Davis-Bacon Act for which the contract is awarded (and any solicitation was issued) on or after January 1, 2015. If this contract is covered by the EO, the contractor must pay all workers in any classification listed on this wage determination at least $10.80 per hour (or the applicable wage rate listed on this wage determination, if it is higher) for all hours spent performing on the contract in calendar year 2020. If this contract is covered by the EO and a classification considered necessary for performance of work on the contract does not appear on this wage determination, the contractor must pay workers in that classification at least the wage rate determined through the conformance process set forth in 29 CFR 5.5(a)(1)(ii) (or the EO minimum wage rate, if it is higher than the conformed wage rate). The EO minimum wage rate will be adjusted annually. Please note that this EO applies to the above-mentioned types of contracts entered into by the federal government that are subject to the Davis-Bacon Act itself, but it does not apply to contracts subject only to the Davis-Bacon Related Acts, including those set forth at 29 CFR 5.1(a)(2)-(60). Additional information on contractor requirements and worker protections under the EO is available at www.dol.gov/whd/govcontracts.

Modification Number Publication Date
0 01/03/2020

SUSC2011-037 09/15/2011

	Rates	Fringes
CARPENTER (Form Work Only).....	$ 14.00	
CEMENT MASON/CONCRETE FINISHER		
Abbeville, Cherokee, Chester, Greenwood, Lancaster, McCormick, Oconee, Union.....	$ 11.63	
Chesterfield, Clarendon, Dillon, Lee, Marion, Marlboro.....	$ 13.02	
GUARDRAIL INSTALLER,Includes Guard Rail/Post Driver Installation		
Abbeville, Cherokee, Chester, Chesterfield, Clarendon, Dillon, Greenwood, Lancaster, Lee, Marion, Marlboro, McCormick, Union.....	$ 12.52	
Oconee.....	$ 12.65	
IRONWORKER, REINFORCING.....	$ 15.64	
LABORER		
Asphalt, Includes Asphalt Distributor, Raker, Shoverler, and Spreader.....	$ 10.96	
Common or General		
Abbeville, Greenwood.....	$ 8.85	
Cherokee.....	$ 9.40	
Chester.....	$ 9.55	
Chesterfield.....	$ 9.93	
Clarendon, Dillon, Lee, Marion, Marlboro.....	$ 10.00	
Lancaster.....	$ 9.67	
McCormick, Union.....	$ 9.39	
Oconee.....	$ 9.47	
Luteman.....	$ 10.93	
Pipelayer.....	$ 13.87	
Traffic Control- Cone Setter.....	$ 12.47	
Traffic Control-Flagger		

Abbeville, Cherokee,
Chester, Chesterfield,
Clarendon, Dillon,
Greenwood, Lee, Marion,
Marlboro, McCormick,
Oconee, Union.....$ 10.15
Lancaster.....$ 10.83

POWER EQUIPMENT OPERATOR:
Backhoe/Excavator/Trackhoe
Abbeville, Cherokee,
Chester, Greenwood,
Lancaster, McCormick,
Oconee, Union.....$ 16.25
Chesterfield, Clarendon,
Dillon, Lee, marion,
Marlboro.....$ 15.08
Bulldozer.....$ 13.66 3.40
Crane.....$ 20.12
Grader/Blade
Abbeville, Cherokee,
Chester, Greenwood,
Lancaster, McCormick,
Oconee, Union.....$ 16.20
Chesterfield, Clarendon,
Dillon, Lee, Marion,
Marlboro.....$ 15.85
Loader (Front End).....$ 15.51
Mechanic.....$ 18.22
Milling Machine.....$ 15.51
Paver
Abbeville, Cherokee,
Chester, Greenwood,
Lancaster, McCormick,
Oconee, Union.....$ 14.58
Chesterfield, Clarendon,
Dillon, Lee, Marion,
Marlboro.....$ 13.39
Roller
Abbeville, Cherokee,
Chester, Greenwood,
Lancaster, McCormick,
Oconee, Union.....$ 11.22
Chesterfield, Clarendon,
Dillon, Lee, Marion,
Marlboro.....$ 11.95
Screed.....$ 12.45
Tractor.....$ 13.26

TRUCK DRIVER

Dump Truck
Abbeville, Cherokee,
Chester, Greenwood,
Lancaster, McCormick,
Oconee, Union.....$ 12.83
Clarendon, Dillon, Lee,
Marion, Marlboro.....$ 11.69
Lowboy Truck
Abbeville, Cherokee,
Chester, Greenwood,
Lancaster, McCormick,
Oconee Union.....$ 14.19
Chesterfield, Clarendon,
Dillon, Lee, Marion,
Marlboro.....$ 14.16
Single Axle, Includes
Pilot Car
Abbeville, Cherokee,
Greenwood, Lancaster,
McCormick, Oconee, Union...$ 10.83
Tractor Haul truck.....$ 16.25

WELDERS - Receive rate prescribed for craft performing operation to which welding is incidental.

==========

Note: Executive Order (EO) 13706, Establishing Paid Sick Leave for Federal Contractors applies to all contracts subject to the Davis-Bacon Act for which the contract is awarded (and any solicitation was issued) on or after January 1, 2017. If this contract is covered by the EO, the contractor must provide employees with 1 hour of paid sick leave for every 30 hours they work, up to 56 hours of paid sick leave each year. Employees must be permitted to use paid sick leave for their own illness, injury or other health-related needs, including preventive care; to assist a family member (or person who is like family to the employee) who is ill, injured, or has other health-related needs, including preventive care; or for reasons resulting from, or to assist a family member (or person who is like family to the employee) who is a victim of, domestic violence, sexual assault, or stalking. Additional information on contractor requirements and worker protections under the EO is available at www.dol.gov/whd/govcontracts.

Unlisted classifications needed for work not included within the scope of the classifications listed may be added after award only as provided in the labor standards contract clauses (29CFR 5.5 (a) (1) (ii)).

The body of each wage determination lists the classification and wage rates that have been found to be prevailing for the cited type(s) of construction in the area covered by the wage determination. The classifications are listed in alphabetical order of ""identifiers"" that indicate whether the particular rate is a union rate (current union negotiated rate for local), a survey rate (weighted average rate) or a union average rate (weighted union average rate).

Union Rate Identifiers

A four letter classification abbreviation identifier enclosed in dotted lines beginning with characters other than ""SU"" or ""UAVG"" denotes that the union classification and rate were prevailing for that classification in the survey. Example: PLUM0198-005 07/01/2014. PLUM is an abbreviation identifier of the union which prevailed in the survey for this classification, which in this example would be Plumbers. 0198 indicates the local union number or district council number where applicable, i.e., Plumbers Local 0198. The next number, 005 in the example, is an internal number used in processing the wage determination. 07/01/2014 is the effective date of the most current negotiated rate, which in this example is July 1, 2014.

Union prevailing wage rates are updated to reflect all rate changes in the collective bargaining agreement (CBA) governing this classification and rate.

Survey Rate Identifiers

Classifications listed under the ""SU"" identifier indicate that no one rate prevailed for this classification in the survey and the published rate is derived by computing a weighted average rate based on all the rates reported in the survey for that classification. As this weighted average rate includes all rates reported in the survey, it may include both union and non-union rates. Example: SULA2012-007 5/13/2014. SU indicates the rates are survey rates based on a weighted average calculation of rates and are not majority rates. LA indicates the State of Louisiana. 2012 is the year of survey on which these classifications and rates are based. The next number, 007 in the example, is an internal number used in producing the wage determination. 5/13/2014 indicates the survey completion date for the classifications and rates under that identifier.

Survey wage rates are not updated and remain in effect until a new survey is conducted.

Union Average Rate Identifiers

Classification(s) listed under the UAVG identifier indicate that no single majority rate prevailed for those classifications; however, 100% of the data reported for the classifications was union data. EXAMPLE: UAVG-OH-0010 08/29/2014. UAVG indicates that the rate is a weighted union average rate. OH indicates the state. The next number, 0010 in the example, is an internal number used in producing the wage determination. 08/29/2014 indicates the survey completion date for the classifications and rates under that identifier.

A UAVG rate will be updated once a year, usually in January of each year, to reflect a weighted average of the current negotiated/CBA rate of the union locals from which the rate is based.

WAGE DETERMINATION APPEALS PROCESS

1.) Has there been an initial decision in the matter? This can be:

* an existing published wage determination
* a survey underlying a wage determination
* a Wage and Hour Division letter setting forth a position on a wage determination matter
* a conformance (additional classification and rate) ruling

On survey related matters, initial contact, including requests for summaries of surveys, should be with the Wage and Hour Regional Office for the area in which the survey was conducted because those Regional Offices have responsibility for the Davis-Bacon survey program. If the response from this initial contact is not satisfactory, then the process described in 2.) and 3.) should be followed.

With regard to any other matter not yet ripe for the formal process described here, initial contact should be with the Branch of Construction Wage Determinations. Write to:

Branch of Construction Wage Determinations
Wage and Hour Division

U.S. Department of Labor
200 Constitution Avenue, N.W.
Washington, DC 20210

2.) If the answer to the question in 1.) is yes, then an interested party (those affected by the action) can request review and reconsideration from the Wage and Hour Administrator (See 29 CFR Part 1.8 and 29 CFR Part 7). Write to:

Wage and Hour Administrator
U.S. Department of Labor
200 Constitution Avenue, N.W.
Washington, DC 20210

The request should be accompanied by a full statement of the interested party's position and by any information (wage payment data, project description, area practice material, etc.) that the requestor considers relevant to the issue.

3.) If the decision of the Administrator is not favorable, an interested party may appeal directly to the Administrative Review Board (formerly the Wage Appeals Board). Write to:

Administrative Review Board
U.S. Department of Labor
200 Constitution Avenue, N.W.
Washington, DC 20210

4.) All decisions by the Administrative Review Board are final.

==========

END OF GENERAL DECISION
"

Back

FORM **CD-512**
(REV 12-04)

U.S. DEPARTMENT OF COMMERCE

CERTIFICATION REGARDING LOBBYING
LOWER TIER COVERED TRANSACTIONS

Applicants should review the instructions for certification included in the regulations before completing this form. Signature on this form provides for compliance with certification requirements under 15 CFR Part 28, "New Restrictions on Lobbying."

LOBBYING

As required by Section 1352, Title 31 of the U.S. Code, and implemented at 15 CFR Part 28, for persons entering into a grant, cooperative agreement or contract over $100,000 or a loan or loan guarantee over $150,000 as defined at 15 CFR Part 28, Sections 28.105 and 28.110, the applicant certifies that to the best of his or her knowledge and belief, that:

(1) No Federal appropriated funds have been paid or will be paid, by or on behalf of the undersigned, to any person for influencing or attempting to influence an officer or employee of any agency, a Member of Congress in connection with the awarding of any Federal contract, the making of any Federal grant, the making of any Federal loan, the entering into of any cooperative agreement, and the extension, continuation, renewal, amendment, or modification of any Federal contract, grant, loan, or cooperative agreement.

(2) If any funds other than Federal appropriated funds have been paid or will be paid to any person for influencing or attempting to influence an officer or employee of any agency, a Member of Congress, an officer or employee of Congress, or an employee of a member of Congress in connection with this Federal contract, grant, loan, or cooperative agreement, the undersigned shall complete and submit Standard Form-LLL, "Disclosure Form to Report Lobbying," in accordance with its instructions.

(3) The undersigned shall require that the language of this certification be included in the award documents for all subawards at all tiers (including subcontracts, subgrants, and contracts under grants, loans, and cooperative agreements) and that all subrecipients shall certify and disclose accordingly.

This certification is a material representation of fact upon which reliance was placed when this transaction was made or entered into. Submission of this certification is a prerequisite for making or entering into this transaction imposed by section 1352, title 31, U.S. Code. Any person who fails to file the required certification shall be subject to a civil penalty of not less than $10,000 and not more than $100,000 for each such failure occurring on or before October 23, 1996, and of not less than $11,000 and not more than $110,000 for each such failure occurring after October 23, 1996.

Statement for Loan Guarantees and Loan Insurance

The undersigned states, to the best of his or her knowledge and belief, that:

In any funds have been paid or will be paid to any person for influencing or attempting to influence an officer or employee of any agency, a Member of Congress, an officer or employee of Congress, or an employee of a Member of Congress in connection with this commitment providing for the United States to insure or guarantee a loan, the undersigned shall complete and submit Standard Form-LLL, ''Disclosure Form to Report Lobbying,'' in accordance with its instructions.

Submission of this statement is a prerequisite for making or entering into this transaction imposed by section 1352, title 31, U.S. Code. Any person who fails to file the required statement shall be subject to a civil penalty of not less than $10,000 and not more than $100,000 for each such failure occurring on or before October 23, 1996, and of not less than $11,000 and not more than $110,000 for each such failure occurring after October 23, 1996.

As the duly authorized representative of the applicant, I hereby certify that the applicant will comply with the above applicable certification.

NAME OF APPLICANT	AWARD NUMBER AND/OR PROJECT NAME
PRINTED NAME AND TITLE OF AUTHORIZED REPRESENTATIVE	
SIGNATURE	DATE

Back

NOTICE OF REQUIREMENTS FOR AFFIRMATIVE ACTION TO ENSURE EQUAL EMPLOYMENT OPPORTUNITY (EXECUTIVE ORDER 11246 AND 41 CFR PART 60-4)

The following Notice shall be included in, and shall be a part of all solicitations for offers and bids on all Federal and federally assisted construction contracts or subcontracts in excess of $10,000.

The Offeror's or Bidder's attention is called to the "Equal Opportunity Clause" and the "Standard Federal Equal Employment Opportunity Construction Contract Specifications" set forth herein.

The goals and timetables for minority and female participation, expressed in percentage terms for the Contractor's aggregate workforce in each trade on all construction work in the covered area, are as follows:

Timetables	**Goals for minority participation for each trade**	**Goals for female participation for each trade**
_____	%	6.9%

These goals are applicable to all the Contractor's construction work (whether or not it is Federal or federally assisted) performed in the covered area. If the contractor performs construction work in a geographical area located outside of the covered area, it shall apply the goals established for such geographical area where the work is actually performed. With regard to this second area, the contractor also is subject to the goals for both its federally involved and non federally involved construction.
The Contractor's compliance with the Executive Order and the regulations in 41 CFR Part 60-4 shall be based on its implementation of the Equal Opportunity Clause, specific affirmative action obligations required by the specifications set forth in 41 CFR 60-4.3(a), and its efforts to meet the goals. The hours of minority and female employment and training must be substantially uniform throughout the length of the contract, and in each trade and the contractor shall make a good faith effort to employ minorities and women evenly on each of its projects. The transfer of minority or female employees or trainees from Contractor to Contractor or from project to project for the sole purpose of meeting the Contractor's goals shall be a violation of the contract, the Executive Order, and the regulations in 41 CFR Part 60-4. Compliance with the goals will be measured against the total work hours performed.

The Contractor shall provide written notification to the Director of the Office of Federal Contract Compliance Programs within 10 working days of award of any construction subcontract in excess of $10,000 at any tier for construction work under the contract resulting from this solicitation. The notification shall list the name, address and telephone number of the subcontractor; employer identification number of the subcontractor; estimated dollar amount of the subcontract; estimated starting and completion dates of the subcontract; and the geographical area in which the subcontract is to be performed.
As used in this Notice, and in the contract resulting from this solicitation, the "covered area" is:

State of _____

County of _____

City of _____

Back

OMB Number: 0610-0096
Expiration Date: 11/30/2021

U. S. DEPARTMENT OF COMMERCE
ECONOMIC DEVELOPMENT ADMINISTRATION

EDA CONTRACTING PROVISIONS
FOR CONSTRUCTION PROJECTS

These EDA Contracting Provisions for Construction Projects (EDA Contracting Provisions) are intended for use by recipients receiving federal assistance from the U. S. Department of Commerce - Economic Development Administration (EDA). They contain provisions specific to EDA and other federal provisions not normally found in non-federal contract documents. The requirements contained herein must be incorporated into all construction contracts and subcontracts funded wholly or in part with federal assistance from EDA.

TABLE OF CONTENTS

1. Definitions
2. Applicability
3. Federally Required Contract Provisions
4. Required Provisions Deemed Inserted
5. Inspection by EDA Representatives
6. Examination and Retention of Contractor's Records
7. Construction Schedule and Periodic Estimates
8. Contractor's Title to Material
9. Inspection and Testing of Materials
10. "OR EQUAL" Clause
11. Patent Fees and Royalties
12. Claims for Extra Costs
13. Contractor's and Subcontractor's Insurance
14. Contract Security Bonds
15. Labor Standards - Davis-Bacon and Related Acts
16. Labor Standards - Contract Work Hours and Safety Standards Act
17. Equal Employment Opportunity
18. Contracting with Small, Minority and Women's Businesses
19. Health, Safety and Accident Prevention
20. Conflict of Interest and Other Prohibited Interests
21. New Restrictions on Lobbying
22. Historical and Archaeological Data Preservation
23. Clean Air and Water
24. Use of Lead-Based Paints on Residential Structures
25. Energy Efficiency
26. Environmental Requirements
27. Debarment, Suspension, Ineligibility and Voluntary Exclusions
28. EDA Project Sign
29. Buy America

1. **DEFINITIONS**

Agreement – The written instrument that is evidence of the agreement between the Owner and the Contractor overseeing the Work.

Architect/Engineer - The person or other entity engaged by the Recipient to perform architectural, engineering, design, and other services related to the work as provided for in the contract.

Contract – The entire and integrated written agreement between the Owner and the Contractor concerning the Work. The Contract supersedes prior negotiations, representations, or agreements, whether written or oral.

Contract Documents – Those items so designated in the Agreement. Only printed or hard copies of the items listed in the Agreement are Contract Documents.

Contractor – The individual or entity with whom the Owner has entered into the Agreement.

Drawings or Plans – That part of the Contract Documents prepared or approved by the Architect/Engineer that graphically shows the scope, extent, and character of the Work to be performed by the Contractor.

EDA - The United States of America acting through the Economic Development Administration of the U.S. Department of Commerce or any other person designated to act on its behalf. EDA has agreed to provide financial assistance to the Owner, which includes assistance in financing the Work to be performed under this Contract. Notwithstanding EDA's role, nothing in this Contract shall be construed to create any contractual relationship between the Contractor and EDA.

Owner – The individual or entity with whom the Contractor has entered into the Agreement and for whom the Work is to be performed.

Project – The total construction of which the Work to be performed under the Contract Documents may be the whole, or a part.

Recipient – A non-Federal entity receiving a Federal financial assistance award directly from EDA to carry out an activity under an EDA program, including any EDA-approved successor to the entity.

Specifications – That part of the Contract Documents consisting of written requirements for materials, equipment, systems, standards, and workmanship as applied to the Work, and certain administrative requirements and procedural matters applicable thereto.

Subcontractor – An individual or entity having direct contract with the Contractor or with any other Subcontractor for the performance of a part of the Work at the Site.

Work – The entire construction or the various separately identifiable parts thereof required to be provided under the Contract Documents. Work includes and is the result of performing or providing all labor, services, and documentation necessary to produce such construction and furnishing, installing, and incorporating all materials and equipment into such construction, all as required by the Contract Documents.

2. APPLICABILITY

The Project to which the construction work covered by this Contract pertains is being assisted by the United States of America through federal assistance provided by the U.S. Department of Commerce - Economic Development Administration (EDA). Neither EDA, nor any of its departments, entities, or employees is a party to this Contract. The following EDA Contracting Provisions are included in this Contract and all subcontracts or related instruments pursuant to the provisions applicable to such federal assistance from EDA.

3. FEDERALLY REQUIRED CONTRACT PROVISIONS

(a) All contracts in excess of the simplified acquisition threshold - currently fixed at $150,000 (*see* 41 U.S.C. §§ 134 and 1908) must address administrative, contractual, or legal remedies in instances where contractors violate or breach contract terms, and provide for such sanctions and penalties as may be appropriate.

(b) All contracts in excess of $10,000 must address termination for cause and for convenience by the Recipient including the manner by which it will be effected and the basis for settlement.

(c) All construction contracts awarded in excess of $10,000 by recipients of federal assistance and their contractors or subcontractors shall contain a provision requiring compliance with Executive Order 11246 of September 24, 1965, *Equal Employment Opportunity*, as amended by Executive Order 11375 of October 13, 1967, and Department of Labor implementing regulations at 41 C.F.R. part 60.

(d) All prime construction contracts in excess of $2,000 awarded by Recipients must include a provision for compliance with the Davis-Bacon Act (40 U.S.C. §§ 3141-3148) as supplemented by Department of Labor regulations at 29 C.F.R. part 5. The contracts must also include a provision for compliance with the Copeland "Anti-Kickback" Act (18 U.S.C. § 874 and 40 U.S.C. § 3145) as supplemented by Department of Labor regulations at 29 C.F.R. part 3.

(e) All contracts awarded by the Recipient in excess of $100,000 that involve the employment of mechanics or laborers must include a provision for compliance with 40 U.S.C. §§ 3702 and 3704 (the Contract Work Hours and Safety Standards Act) as supplemented by Department of Labor regulations at 29 C.F.R. part 5.

(f) All contracts must include EDA requirements and regulations that involve a requirement on the contractor or sub-contractor to report information to EDA, the Recipient or any other federal agency.

(g) All contracts must include EDA requirements and regulations pertaining to patent rights with respect to any discovery or invention which arises or is developed in the course of or under such contract.

(h) All contracts must include EDA requirements and regulations pertaining to copyrights and rights in data.

(i) All contracts and subgrants in excess of $150,000 must contain a provision that requires compliance with all applicable standards, orders, or requirements issued under the Clean Air Act (42 U.S.C. § 7401 *et seq.*) and the Federal Water Pollution Control Act (Clean Water Act) (33 U.S.C. § 1251 *et seq.*), and Executive Order 11738, *Providing for Administration of the Clean Air Act and the Federal Water Pollution Control Act With Respect to Federal Contracts, Grants, or Loans*.

(j) Contracts must contain mandatory standards and policies relating to energy efficiency which are contained in the state energy conservation plan issued in compliance with the Energy Policy and Conservation Act (42 U.S.C.§ 6201).

(k) Contracts must contain a provision ensuring that contracts are not to be made to parties on the government wide Excluded Parties List System in the System for Award Management (SAM), in accordance with the OMB guidelines at 2 C.F.R. part 180.

(l) Contracts must contain a provision ensure compliance with the Byrd Anti-Lobbying Amendment (31 U.S.C. § 1352) under which contractors that apply or bid for an award of $100,000 or more must file the required certification. Each tier certifies to the tier above that it will not and has not used Federal appropriated funds to pay any person or organization for influencing or attempting to influence an officer or employee of any agency, a member of Congress, officer or employee of Congress, or an employee of a member of Congress in connection with obtaining any Federal contract, grant or any other award covered by 31 U.S.C. § 1352. Each tier must also disclose any lobbying with non-Federal funds that takes place in connection with obtaining any Federal award. Such disclosures are forwarded from tier to tier up to the non-Federal award.

(m) If the Recipient is a state agency or agency of a political subdivision of a state, any contract awarded must contain a provision ensuring compliance with section 6002 of the Solid Waste Disposal Act (42 U.S.C. § 6962), as amended by the Resource Conservation and Recovery Act related to the procurement of recovered materials.

4. **REQUIRED PROVISIONS DEEMED INSERTED**

Each and every provision of law and clause required by law to be inserted in this contract shall be deemed to be inserted herein and the contract shall be read and enforced as though it were included herein, and if through mistake or otherwise any such provision is not inserted, or is not correctly inserted, then upon the application of either party the contract shall forthwith be physically amended to make such insertion of correction.

5. INSPECTION BY EDA REPRESENTATIVES

The authorized representatives and agents of EDA shall be permitted to inspect all work, materials, payrolls, personnel records, invoices of materials, and other relevant data and records.

6. EXAMINATION AND RETENTION OF CONTRACTOR'S RECORDS

(a) The Owner, EDA, or the Comptroller General of the United States, or any of their duly authorized representatives shall, generally until three years after final payment under this contract, have access to and the right to examine any of the Contractor's directly pertinent books, documents, papers, or other records involving transactions related to this contract for the purpose of making audit, examination, excerpts, and transcriptions.

(b) The Contractor agrees to include in first-tier subcontracts under this contract a clause substantially the same as paragraph (a) above. "Subcontract," as used in this clause, excludes purchase orders that do not exceed $10,000.

(c) The periods of access and examination in paragraphs (a) and (b) above for records relating to (1) appeals under the disputes clause of this contract, (2) litigation or settlement of claims arising from the performance of this contract, or (3) costs and expenses of this contract to which the Owner, EDA, or Comptroller General or any of their duly authorized representatives has taken exception shall continue until disposition of such appeals, litigation, claims, or exceptions.

7. CONSTRUCTION SCHEDULE AND PERIODIC ESTIMATES

Immediately after execution and delivery of the contract, and before the first partial payment is made, the Contractor shall deliver to the Owner an estimated construction progress schedule in a form satisfactory to the Owner, showing the proposed dates of commencement and completion of each of the various subdivisions of work required under the Contract Documents and the anticipated amount of each monthly payment that will become due to the Contractor in accordance with the progress schedule. The Contractor also shall furnish the Owner (a) a detailed estimate giving a complete breakdown of the contract price and (b) periodic itemized estimates of work done for the purpose of making partial payments thereon. The costs employed in making up any of these schedules will be used only to determine the basis of partial payments and will not be considered as fixing a basis for additions to or deductions from the contract price.

8. CONTRACTOR'S TITLE TO MATERIAL

No materials, supplies, or equipment for the work shall be purchased by the Contractor or by any subcontractor that is subject to any chattel mortgage or under a conditional sale contract or other agreement by which an interest is retained by the seller. The Contractor warrants and guarantees that he/she has good title to all work, materials, and equipment used by him/her in the Work, free and clear of all liens, claims, or encumbrances.

9. INSPECTION AND TESTING OF MATERIALS

All materials and equipment used in the completion of the Work shall be subject to adequate inspection and testing in accordance with accepted standards. The laboratory or inspection agency shall be selected by the Owner. Materials of construction, particularly those upon which the strength and durability of any structure may depend, shall be subject to inspection and testing to establish conformance with specifications and suitability for intended uses.

10. "OR EQUAL" CLAUSE

Whenever a material, article, or piece of equipment is identified in the Contract Documents by reference to manufacturers' or vendors' names, trade names, catalogue numbers, etc., it is intended merely to establish a standard. Any material, article, or equipment of other manufacturers and vendors that will perform adequately the duties imposed by the general design will be considered equally acceptable provided the material, article, or equipment so proposed is, in the opinion of the Architect/Engineer, of equal substance and function. However, such substitution material, article, or equipment shall not be purchased or installed by the Contractor without the Architect/Engineer's written approval.

11. PATENT FEES AND ROYALTIES

(a) Contractor shall pay all license fees and royalties and assume all costs incident to the use in the performance of the Work or the incorporation in the Work of any invention, design, process, product, or device that is the subject of patent rights or copyrights held by others. If a particular invention, design, process, product, or device is specified in the Contract Documents for use in the performance of the Work and if, to the actual knowledge of Owner or Architect/Engineer, its use is subject to patent rights or copyrights calling for the payment of any license fee or royalty to others, the existence of such rights shall be disclosed by the Owner in the Contract Documents.

(b) To the fullest extent permitted by Laws and Regulations, the Contractor shall indemnify and hold harmless the Owner and the Architect/Engineer, and the officers, directors, partners, employees, agents, consultants, and subcontractors of each and any of them from and against all claims, costs, losses, and damages (including but not limited to all fees and charges of engineers, architects, attorneys, and other professionals and all court or arbitration or other dispute resolution costs) arising out of or relating to any infringement of patent rights or copyrights incident to the use in the performance of the Work or resulting from the incorporation in the Work of any invention, design, process, product, or device not specified in the Contract Documents.

12. CLAIMS FOR EXTRA COSTS

No claims for extra work or cost shall be allowed unless the same was done in pursuance of a written order from the Architect/Engineer approved by the Owner.

13. CONTRACTORS AND SUBCONTRACTORS INSURANCE

(a) The Contractor shall not commence work under this Contract until the Contractor has obtained all insurance reasonably required by the Owner, nor shall the Contractor allow any subcontractor to commence work on his/her subcontract until the insurance required of the subcontractor has been so obtained and approved.

(b) Types of insurance normally required are:

(1) Workmen's Compensation
(2) Contractor's Public Liability and Property Damage
(3) Contractor's Vehicle Liability
(4) Subcontractors' Public Liability, Property Damage and Vehicle Liability
(5) Builder's Risk (Fire and Extended Coverage)

(c) **Scope of Insurance and Special Hazards:** The insurance obtained, which is described above, shall provide adequate protection for the Contractor and his/her subcontractors, respectively, against damage claims that may arise from operations under this contract, whether such operations be by the insured or by anyone directly or indirectly employed by him/her and also against any of the special hazards that may be encountered in the performance of this Contract.

(d) **Proof of Carriage of Insurance:** The Contractor shall furnish the Owner with certificates showing the type, amount, class of operations covered, effective dates, and dates of expiration of applicable insurance policies.

14. CONTRACT SECURITY BONDS

(a) If the amount of this Contract exceeds $150,000, the Contractor shall furnish a performance bond in an amount at least equal to one hundred percent (100%) of the Contract price as security for the faithful performance of this Contract and also a payment bond in an amount equal to one hundred percent (100%) of the Contract price or in a penal sum not less than that prescribed by State, Territorial, or local law, as security for the payment of all persons performing labor on the Work under this Contract and furnishing materials in connection with this Contract. The performance bond and the payment bond may be in one or in separate instruments in accordance with local law. Before final acceptance, each bond must be approved by EDA. If the amount of this Contract does not exceed $150,000, the Owner shall specify the amount of the payment and performance bonds.

(b) All bonds shall be in the form prescribed by the Contract Documents except as otherwise provided in applicable laws or regulations, and shall be executed by such sureties as are named in the current list of *Companies Holding Certificates of Authority as Acceptable Sureties on Federal Bonds and as Acceptable Reinsuring Companies* as published in Treasury Circular 570 (amended) by the Financial Management Service, Surety Bond Branch, U.S. Department of the Treasury. All bonds signed by an agent must be accompanied by a certified copy of the agent's

authority to act. Surety companies executing the bonds must also be authorized to transact business in the state where the Work is located.

15. LABOR STANDARDS - DAVIS-BACON AND RELATED ACTS (as required by section 602 of PWEDA)

(a) Minimum Wages

(1) All laborers and mechanics employed or working upon the site of the Work in the construction or development of the Project will be paid unconditionally and not less often than once a week, and without subsequent deduction or rebate on any account (except such payroll deductions as are permitted by regulations issued by the Secretary of Labor under the Copeland Act at 29 C.F.R. part 3, the full amount of wages and bona fide fringe benefits (or cash equivalents thereof) due at the time of payment computed at rates not less than those contained in the wage determination of the Secretary of Labor, which is attached hereto and made a part hereof, regardless of any contractual relationship that may be alleged to exist between the Contractor and such laborers and mechanics. Contributions made or costs reasonably anticipated for bona fide fringe benefits under Section 1(b)(2) of the Davis-Bacon Act on behalf of laborers or mechanics are considered wages paid to such laborers or mechanics, subject to the provisions of 29 C.F.R. § 5.5(a)(1)(iv); also, regular contributions made or costs incurred for more than a weekly period (but not less often than quarterly) under plans, funds, or programs, which cover the particular weekly period, are deemed to be constructively made or incurred during such weekly period. Such laborers and mechanics shall be paid the appropriate wage rate and fringe benefits on the wage determination for the classification of work actually performed, without regard to skill, except as provided in 29 C.F.R. § 5.5(a)(4). Laborers or mechanics performing work in more than one classification may be compensated at the rate specified for each classification for the time actually worked therein, provided that the employer's payroll records accurately set forth the time spent in each classification in which work is performed. The wage determination (including any additional classification and wage rates determined under 29 C.F.R. § 5.5(a)(1)(ii) and the Davis-Bacon poster (WH-1321) shall be posted at all times by the contractor and its subcontractors at the site of the work in a prominent and accessible place where it can be easily seen by the workers.

(2) (i) Any class of laborers or mechanics to be employed under the Contract, but not listed in the wage determination, shall be classified in conformance with the wage determination. EDA shall approve an additional classification and wage rate and fringe benefits therefore only when the following criteria have been met:

(A) The work to be performed by the classification requested is not performed by a classification in the wage determination;

(B) The classification is utilized in the area by the construction industry; and

(C) The proposed wage rate, including any bona fide fringe benefits, bears a

reasonable relationship to the wage rates contained in the wage determination.

(ii) If the Contractor and the laborers and mechanics to be employed in the classification (if known), or their representatives, and EDA or its designee agree on the classification and wage rate (including the amount designated for fringe benefits where appropriate), a report of the action taken shall be sent by EDA or its designee to the Administrator of the Wage and Hour Division, Employment Standards Administration, U.S. Department of Labor, Washington, D.C. 20210.

(iii) In the event the Contractor, the laborers or mechanics to be employed in the classification or their representatives, and EDA or its designee do not agree on the proposed classification and wage rate (including the amount designated for fringe benefits, where appropriate), EDA or its designee shall refer the questions, including the views of all interested parties and the recommendation of EDA or its designee, to the Administrator for determination.

(iv) The wage rate (including fringe benefits where appropriate) determined pursuant to paragraphs (a)(2)(ii) or (iii) of this section, shall be paid to all workers performing work in the classification under this contract from the first day on which work is performed in the classification.

(3) Whenever the minimum wage rate prescribed in the contract for a class of laborers or mechanics includes a fringe benefit which is not expressed as an hourly rate, the Contractor shall either pay the benefit as stated in the wage determination or shall pay another bona fide fringe benefit or an hourly cash equivalent thereof.

(4) If the Contractor does not make payments to a trustee or other third person, the Contractor may consider as part of the wages of any laborer or mechanic the amount of any costs reasonably anticipated in providing bona fide fringe benefits under a plan or program, provided, that the Secretary of Labor has found, upon the written request of the Contractor, that the applicable standards of the Davis-Bacon Act have been met. The Secretary of Labor may require the Contractor to set aside in a separate account assets for the meeting of obligations under the plan or program.

(b) **Withholding**

EDA or its designee shall upon its own action or upon written request of an authorized representative of the Department of Labor withhold or cause to be withheld from the Contractor under this Contract or any other federal contract with the same prime Contractor, or any other federally-assisted contract subject to Davis-Bacon prevailing wage requirements, which is held by the same prime contractor so much of the accrued payments or advances as may be considered necessary to pay laborers and mechanics, including apprentices, trainees and helpers, employed by the Contractor or any subcontractor the full amount of wages required by the Contract. In the event of failure to pay any laborer or mechanic, including any apprentice, trainee or helper employed or working on the site of the Work in the construction or development of the Project, all or part of the wages required by the Contract, EDA or its designee may, after written notice to the Contractor, sponsor, applicant, or owner, take such action as may be necessary to cause the suspension of any further payment, advance, or guarantee of funds until such violations

have ceased. EDA or its designee may, after written notice to the Contractor, disburse such amounts withheld for and on account of the Contractor or subcontractor to the respective employees to whom they are due. The Comptroller General shall make such disbursements in the case of direct Davis-Bacon Act contracts.

(c) **Payrolls and basic records**

(1) Payrolls and basic records relating thereto shall be maintained by the Contractor during the course of the Work and preserved for a period of three years thereafter for all laborers and mechanics working at the site of the Work in the construction or development of the Project. Such records shall contain the name, address, and social security number of each such worker, his or her correct classification, hourly rates of wages paid (including rates of contributions or costs anticipated for bona fide fringe benefits or cash equivalents thereof of the types described in section 1(b)(2)(B) of the Davis-Bacon Act), daily and weekly number of hours worked, deductions made and actual wages paid. Whenever the Secretary of Labor has found under 29 C.F.R. § 5.5(a)(1)(iv) that the wages of any laborer or mechanic include the amount of any costs reasonably anticipated in providing benefits under a plan or program described in section 1(b)(2)(B) of the Davis-Bacon Act, the Contractor shall maintain records which show that the commitment to provide such benefits is enforceable, the plan or program is financially responsible, and the plan or program has been communicated in writing to the laborers or mechanics affected, and provide records that show the costs anticipated or the actual cost incurred in providing such benefits. Contractors employing apprentices or trainees under approved programs shall maintain written evidence of the registration of apprenticeship programs and certification of trainee programs, the registration of the apprentices and trainees, and the ratios and wage rates prescribed in the applicable programs.

(2) (i) For each week in which Contract work is performed, the Contractor shall submit a copy of all payrolls to the Owner for transmission to EDA or its designee. The payrolls submitted shall set out accurately and completely all of the information required to be maintained under 29 C.F.R. part 5.5(a)(3)(i). This information may be submitted in any form desired. Optional Form WH-347 is available for this purpose. It may be purchased from the Superintendent of Documents (Federal Stock Number 029-005-00014-1), U.S. Government Printing Office, Washington, D.C. 20402; or downloaded from the U.S. Department of Labor's website at https://www.dol.gov/whd/forms/wh347.pdf. The prime Contractor is responsible for the submission of copies of payrolls by all subcontractors

(ii) Each payroll submitted shall be accompanied by a "Statement of Compliance," signed by the Contractor or subcontractor or his or her agent who pays or supervises the payment of the persons employed under the Contract and shall certify the following:

(A) That the payroll for the payroll period contains the information required to be maintained under 29 C.F.R. § 5.5(a)(3)(i) and that such information is correct and complete;

(B) That each laborer or mechanic (including each helper, apprentice, and trainee) employed on the Contract during the payroll period has been paid the full weekly wages earned, without rebate, either directly or indirectly, and that no deductions have been made either directly or indirectly from the full wages earned, other than permissible deductions as set forth in 29 C.F.R. part 3; and

(C) That each laborer or mechanic has been paid not less than the applicable wage rates and fringe benefits or cash equivalents for the classification of work performed, as specified in the applicable wage determination incorporated into the Contract.

(iii) The weekly submission of a properly executed certification set forth on the reverse side of Optional Form WH-347 shall satisfy the requirement for submission of the "Statement of Compliance" required by paragraph 15(c)(2)(ii) of this section.

(iv) The falsification of any of the above certifications may subject the Contractor or subcontractor to civil or criminal prosecution under section 1001 of Title 18 and section 3729 of Title 31 of the U.S. Code.

(3) The Contractor or subcontractor shall make the records required under paragraph 15(c)(1) of this section available for inspection, copying, or transcription by authorized representatives of EDA or its designee or the Department of Labor, and shall permit such representatives to interview employees during working hours on the job. If the Contractor or subcontractor fails to submit the required records or to make them available, EDA or its designee may, after written notice to the Contractor or Owner, take such action as may be necessary to cause the suspension of any further payment, advance, or guarantee of funds. Furthermore, failure to submit the required records upon request or to make such records available may be grounds for debarment action pursuant to 29 C.F.R. § 5.12.

(d) **Apprentices and Trainees**.

(1) **Apprentices**. Apprentices will be permitted to work at less than the predetermined rate for the work they performed when they are employed pursuant to and individually registered in a bona fide apprenticeship program registered with the U.S. Department of Labor, Employment and Training Administration, Bureau of Apprenticeship and Training (Bureau), or with a State Apprenticeship Agency recognized by the Bureau, or if a person is employed in his or her first 90 days of probationary employment as an apprentice in such an apprenticeship program, who is not individually registered in the program, but who has been certified by the Bureau of Apprenticeship and Training or a State Apprenticeship Agency (where appropriate) to be eligible for probationary employment as an apprentice. The allowable ratio of apprentices to journeymen on the job site in any craft classification shall not be greater than the ratio permitted to the Contractor as to the entire work force under the registered program. Any worker listed on a payroll at an apprentice wage rate who is not registered or otherwise employed as stated above, shall be paid not less than the applicable wage rate on the wage determination for the classification of work actually performed. In addition, any

apprentice performing work on the job site in excess of the ratio permitted under the registered program shall be paid not less than the applicable wage rate on the wage determination for the work actually performed. Where a Contractor is performing construction on a Project in a locality other than that in which its program is registered, the ratios and wage rates (expressed in percentages of the journeyman's hourly rate) specified in the Contractor's or subcontractor's registered program shall be observed. Every apprentice must be paid at not less than the rate specified in the registered program for the apprentice's level of progress, expressed as a percentage of the journeymen hourly rate specified in the applicable wage determination. Apprentices shall be paid fringe benefits in accordance with the provisions of the apprenticeship program. If the apprenticeship program does not specify fringe benefits, apprentices must be paid the full amount of fringe benefits listed on the wage determination for the applicable classification. If the Administrator determines that a different practice prevails for the applicable apprentice classification, fringes shall be paid in accordance with that determination. In the event the Bureau of Apprenticeship and Training, or a State Apprenticeship Agency recognized by the Bureau, withdraws approval of an apprenticeship program, the Contractor will no longer be permitted to utilize apprentices at less than the applicable predetermined rate for the work performed until an acceptable program is approved.

(2) **Trainees**. Except as provided in 29 C.F.R. § 5.16, trainees will not be permitted to work at less than the predetermined rate for the work performed unless they are employed pursuant to and individually registered in a program that has received prior approval, evidenced by formal certification by the U.S. Department of Labor, Employment and Training Administration. The ratio of trainees to journeymen on the job site shall not be greater than permitted under the plan approved by the Employment and Training Administration. Every trainee must be paid at not less than the rate specified in the approved program for the trainee's level of progress, expressed as a percentage of the journeyman's hourly rate specified in the applicable wage determination. Trainees shall be paid fringe benefits in accordance with the provisions of the trainee program. If the trainee program does not mention fringe benefits, trainees shall be paid the full amount of fringe benefits listed on the wage determination unless the Administrator of the Wage and Hour Division determines that there is an apprenticeship program associated with the corresponding journeyman wage rate on the wage determination which provides for less than full fringe benefits for apprentices. Any employee listed on the payroll at a trainee rate who is not registered and participating in a training plan approved by the Employment and Training Administration shall be paid not less than the applicable wage rate on the wage determination for the classification of work actually performed. In addition, any trainee performing work on the job site in excess of the ratio permitted under the registered program shall be paid not less than the applicable wage rate on the wage determination for the work actually performed. In the event the Employment and Training Administration withdraws approval of a training program, the Contractor will no longer be permitted to utilize trainees at less than the applicable predetermined rate for the work performed until an acceptable program is approved.

(3) **Equal employment opportunity**. The utilization of apprentices, trainees and journeymen under this part shall be in conformity with the equal employment opportunity

requirements of Executive Order 11246, *Equal Employment Opportunity*, as amended, and 29 C.F.R. part 30.

(e) **Compliance with Copeland Anti-Kickback Act Requirements**. The Contractor shall comply with the Copeland Anti-Kickback Act (18 U.S.C. § 874 and 40 U.S.C. § 3145) as supplemented by Department of Labor regulations (29 C.F.R. part 3, "Contractors and Subcontractors on Public Buildings or Public Works Financed in Whole or in Part by Loans or Grants of the United States"). The Act provides that the Contractor and any subcontractors shall be prohibited from inducing, by any means, any person employed in the construction, completion, or repair of public work, to give up any part of the compensation to which they are otherwise entitled. The Owner shall report all suspected or reported violations to EDA.

(f) **Subcontracts**. The Contractor and any subcontractors will insert in any subcontracts the clauses contained in 29 C.F.R. §§ 5.5(a)(1) through (10) and such other clauses as EDA or its designee may require, and also a clause requiring the subcontractors to include these clauses in any lower tier subcontracts. The prime Contractor shall be responsible for the compliance by any subcontractor or lower tier subcontractor with all the contract clauses in 29 C.F.R. § 5.5.

(g) **Contract termination; debarment**. The breach of the contract clauses in 29 C.F.R. § 5.5 may be grounds for termination of the contract, and for debarment as a Contractor and a subcontractor as provided in 29 C.F.R. § 5.12.

(h) **Compliance with Davis-Bacon and Related Act Requirements**. All rulings and interpretations of the Davis-Bacon and Related Acts contained in 29 C.F.R. parts 1, 3, and 5 are herein incorporated by reference in this contract.

(i) **Disputes concerning labor standards**. Disputes arising out of the labor standards provisions of this Contract shall not be subject to the general disputes clause of this Contract. Such disputes shall be resolved in accordance with the procedures of the Department of Labor set forth in 29 C.F.R. parts 5, 6, and 7. Disputes within the meaning of this clause include disputes between the contractor (or any of its subcontractors) and EDA or its designee, the U.S. Department of Labor, or the employees or their representatives.

(j) **Certification of Eligibility**.

(1)By entering into this Contract, the Contractor certifies that neither it nor any person or firm that has an interest in the Contractor's firm is a person or firm ineligible to be awarded Government contracts by virtue of section 3(a) of the Davis-Bacon Act or 29 C.F.R. § 5.12(a)(1).

(2) No part of this Contract shall be subcontracted to any person or firm ineligible for award of a Government contract by virtue of section 3(a) of the Davis-Bacon Act or 29 C.F.R. § 5.12(a)(1).

(3) The penalty for making false statements is prescribed in the U.S. Criminal Code, 18 U.S.C. § 1001.

16. LABOR STANDARDS - CONTRACT WORK HOURS AND SAFETY STANDARDS ACT

As used in this paragraph, the terms "laborers" and "mechanics" include watchmen and guards.

(a) **Overtime requirements**. No Contractor or subcontractor contracting for any part of the Contract work, which may require or involve the employment of laborers or mechanics, shall require or permit any such laborer or mechanic in any workweek in which that person is employed on such work to work in excess of forty hours in such workweek unless such laborer or mechanic receives compensation at a rate not less than one and one-half times the basic rate of pay for all hours worked in excess of forty hours in such workweek.

(b) **Violation; liability for unpaid wages, liquidated damages**. In the event of any violation of the clause set forth in paragraph (a) of this section, the Contractor and any subcontractor responsible therefore shall be liable for the unpaid wages. In addition, such Contractor and subcontractor shall be liable to the United States (in the case of work done under contract for the District of Columbia or a territory, to such District or to such territory), for liquidated damages. Such liquidated damages shall be computed with respect to each individual laborer or mechanic, including watchmen and guards, employed in violation of the clause set forth in paragraph (a) of this section, in the sum of $10 for each calendar day on which such individual was required or permitted to work in excess of the standard workweek of forty hours without payment of the overtime wages required by the clause set forth in paragraph (a) of this section.

(c) **Withholding for unpaid wages and liquidated damages**. EDA or its designee shall upon its own action or upon written request of an authorized representative of the Department of Labor withhold or cause to be withheld, from any monies payable on account of work performed by the Contractor or subcontractor under any such Contract or any other federal contract with the same prime Contractor, or any other federally-assisted contract subject to the Contract Work Hours and Safety Standards Act, which is held by the same prime Contractor such sums as may be determined to be necessary to satisfy any liabilities of such Contractor or subcontractor for unpaid wages and liquidated damages as provided in the clause set forth in paragraph (b) of this section.

(d) **Subcontracts**. The Contractor or subcontractor shall insert in any subcontracts the clauses set forth in paragraphs (a) through (c) of this section and also a clause requiring the subcontractors to include these clauses in any lower tier subcontracts. The prime Contractor shall be responsible for compliance by any subcontractor or lower tier subcontractor with the clauses set forth in paragraphs (a) through (c) of this section.

17. EQUAL EMPLOYMENT OPPORTUNITY

(a) The Recipient hereby agrees that it will incorporate or cause to be incorporated into any contract for construction work, or modification thereof, as defined in the regulations of the Secretary of Labor at 41 C.F.R. chapter 60, which is paid for in whole or in part with funds obtained from EDA, the following equal opportunity clause:

During the performance of this contract, the Contractor agrees as follows:

(1) The Contractor will not discriminate against any employee or applicant for employment because of race, color, religion, sex, sexual orientation, gender identity, or national origin. The Contractor will take affirmative action to ensure that applicants are employed, and that employees are treated during employment without regard to their race, color, religion, sex, sexual orientation, gender identity, or national origin. Such action shall include, but not be limited to the following: Employment, upgrading, demotion, or transfer; recruitment or recruitment advertising; layoff or termination; rates of pay or other forms of compensation; and selection for training including apprenticeship. The Contractor agrees to post in conspicuous places available to employees and applicants for employment notices to be provided setting forth the provisions of this nondiscrimination clause.

(2) The Contractor will, in all solicitations or advertisements for employees placed by or on behalf of the Contractor state that all qualified applicants will receive consideration for employment without regard to race, color, religion, sex, sexual orientation, gender identity, or national origin.

(3) The contractor will not discharge or in any other manner discriminate against any employee or applicant for employment because such employee or applicant has inquired about, discussed, or disclosed the compensation of the employee or applicant or another employee or applicant. This provision shall not apply to instances in which an employee who has access to the compensation information of other employees or applicants as a part of such employee's essential job functions discloses the compensation of such other employees or applicants to individuals who do not otherwise have access to such information, unless such disclosure is in response to a formal complaint or charge, in furtherance of an investigation, proceeding, hearing, or action, including an investigation conducted by the employer, or is consistent with the contractor's legal duty to furnish information.

(4) The Contractor will send to each labor union or representative of workers with which it has a collective bargaining agreement or other contract or understanding, a notice to be provided advising the said labor union or workers representatives of the Contractor's commitments hereunder, and shall post copies of the notice in conspicuous places available to employees and applicants for employment.

(5) The Contractor will comply with all provisions of Executive Order 11246 of September 24, 1965 and of the rules, regulations, and relevant orders of the Secretary of Labor.

(6) The Contractor will furnish all information and reports required by Executive Order 11246 of September 24, 1965, and by rules, regulations, and orders of the Secretary of Labor, or pursuant thereto, and will permit access to its books, records, and accounts by EDA and the Secretary of Labor for purposes of investigation to ascertain compliance with such rules, regulations, and orders.

(7) In the event of the Contractor's noncompliance with the nondiscrimination clauses of

this Contract or with any of the said rules, regulations, or orders, this Contract may be canceled, terminated, or suspended in whole or in part and the Contractor may be declared ineligible for further Government contracts or federally-assisted construction contracts in accordance with procedures authorized in Executive Order 11246 of September 24, 1965, and such other sanctions may be imposed and remedies invoked as provided in Executive Order 11246 of September 24, 1965, or by rule, regulation or order of the Secretary of Labor, or as otherwise provided by law.

(8) The Contractor will include the portion of the sentence immediately preceding paragraph 17(a)(1) and the provisions of paragraphs 17(a)(1) through (8) in every subcontract or purchase order unless exempted by rules, regulations, or orders of the Secretary of Labor issued pursuant to section 204 of Executive Order 11246 of September 24, 1965, so that such provisions will be binding upon each subcontractor or vendor. The Contractor will take such action with respect to any subcontract or purchase order as EDA or the Secretary of Labor may direct as a means of enforcing such provisions, including sanctions for noncompliance. Provided, however, that in the event the Contractor becomes involved in or is threatened with litigation with a subcontractor or vendor as a result of such direction by EDA or the Secretary of Labor, the Contractor may request the United States to enter into such litigation to protect the interests of the United States.

(9) The Recipient further agrees that it will be bound by the above equal opportunity clause with respect to its own employment practices when it participates in federally-assisted construction work. Provided, however, that if the Recipient so participating is a State or local government, the above equal opportunity clause is not applicable to any agency, instrumentality, or subdivision of such government that does not participate in work on or under the Contract.

(10)The Recipient agrees that it will assist and cooperate actively with EDA and the Secretary of Labor in obtaining the compliance of contractors and subcontractors with the equal opportunity clause and the rules, regulations, and relevant orders of the Secretary of Labor, that it will furnish EDA and the Secretary of Labor such information as they may require for the supervision of such compliance, and that it will otherwise assist EDA in the discharge of the EDA's primary responsibility for securing compliance.

(11) The Recipient further agrees that it will refrain from entering into any contract or contract modification subject to Executive Order 11246 of September 24, 1965, with a Contractor debarred from, or who has not demonstrated eligibility for, Government contracts and federally assisted construction contracts pursuant to the Executive Order and will carry out such sanctions and penalties for violation of the equal opportunity clause as may be imposed upon contractors and subcontractors by EDA or the Secretary of Labor pursuant to Part II, Subpart D of the Executive Order. In addition, the Recipient agrees that if it fails or refuses to comply with these undertakings, EDA may take any or all of the following actions: Cancel, terminate, or suspend in whole or in part this EDA financial assistance; refrain from extending any further assistance to the applicant under the program with respect to which the failure or refund occurred until satisfactory assurance of future compliance has been received from such applicant; and refer the case

to the Department of Justice for appropriate legal proceedings.

(b) Exemptions to Above Equal Opportunity Clause (41 C.F.R. chapter 60):

(1) Contracts and subcontracts not exceeding $10,000 (other than Government bills of lading, and other than contracts and subcontracts with depositories of Federal funds in any amount and with financial institutions which are issuing and paying agents for U.S. savings bonds and savings notes) are exempt. The amount of the Contract, rather than the amount of the federal financial assistance, shall govern in determining the applicability of this exemption.

(2) Except in the case of subcontractors for the performance of construction work at the site of construction, the clause shall not be required to be inserted in subcontracts below the second tier.

(3) Contracts and subcontracts not exceeding $10,000 for standard commercial supplies or raw materials are exempt.

18. CONTRACTING WITH SMALL, MINORITY AND WOMEN'S BUSINESSES

(a) If the Contractor intends to let any subcontracts for a portion of the work, the Contractor shall take affirmative steps to assure that small, minority and women's businesses are used when possible as sources of supplies, equipment, construction, and services.

(b) Affirmative steps shall consist of:

(1) Placing qualified small and minority businesses and women's business enterprises on solicitation lists;

(2) Ensuring that small and minority businesses and women's business enterprises are solicited whenever they are potential sources;

(3) Dividing total requirements, when economically feasible, into smaller tasks or quantities to permit maximum participation by small and minority businesses and women's business enterprises;

(4) Establishing delivery schedules, where the requirements of the contract permit, which encourage participation by small and minority businesses and women's business enterprises;

(5) Using the services and assistance of the U.S. Small Business Administration, the Minority Business Development Agency of the U.S. Department of Commerce, and State and local governmental small business agencies;

(6) Requiring each party to a subcontract to take the affirmative steps of this section; and

(7) The Contractor is encouraged to procure goods and services from labor surplus area firms.

19. **HEALTH, SAFETY, AND ACCIDENT PREVENTION**

(a) In performing this contract, the Contractor shall:

(1) Ensure that no laborer or mechanic shall be required to work in surroundings or under working conditions which are unsanitary, hazardous, or dangerous to their health and/or safety as determined under construction safety and health standards promulgated by the Secretary of Labor by regulation;

(2) Protect the lives, health, and safety of other persons;

(3) Prevent damage to property, materials, supplies, and equipment; and

(4) Avoid work interruptions.

(b) For these purposes, the Contractor shall:

(1) Comply with regulations and standards issued by the Secretary of Labor at 29 C.F.R. part 1926. Failure to comply may result in imposition of sanctions pursuant to the Contract Work Hours and Safety Standards Act (40 U.S.C. §§ 3701 – 3708); and

(2) Include the terms of this clause in every subcontract so that such terms will be binding on each subcontractor.

(c) The Contractor shall maintain an accurate record of exposure data on all accidents incident to work performed under this Contract resulting in death, traumatic injury, occupational disease, or damage to property, materials, supplies, or equipment, and shall report this data in the manner prescribed by 29 C.F.R. part 1904.

(d) The Owner shall notify the Contractor of any noncompliance with these requirements and of the corrective action required. This notice, when delivered to the Contractor or the Contractor's representative at the site of the Work, shall be deemed sufficient notice of the noncompliance and corrective action required. After receiving the notice, the Contractor shall immediately take corrective action. If the Contractor fails or refuses to take corrective action promptly, the Owner may issue an order stopping all or part of the Work until satisfactory corrective action has been taken. The Contractor shall not base any claim or request for equitable adjustment for additional time or money on any stop order issued under these circumstances.

(e) The Contractor shall be responsible for its subcontractors' compliance with the provisions of this clause. The Contractor shall take such action with respect to any subcontract as EDA, or the Secretary of Labor shall direct as a means of enforcing such provisions.

20. CONFLICT OF INTEREST AND OTHER PROHIBITED INTERESTS

(a) No official of the Owner who is authorized in such capacity and on behalf of the Owner to negotiate, make, accept, or approve, or to take part in negotiating, making, accepting, or approving any architectural, engineering, inspection, construction or material supply contract or any subcontract in connection with the construction of the Project, shall become directly or indirectly interested personally in this Contract or in any part hereof.

(b) No officer, employee, architect, attorney, engineer, or inspector of or for the Owner who is authorized in such capacity and on behalf of the Owner to exercise any legislative, executive, supervisory or other similar functions in connection with the construction of the Project, shall become directly or indirectly interested personally in this Contract or in any part thereof, any material supply contract, subcontract, insurance contract, or any other contract pertaining to the Project.

(c) The Contractor may not knowingly contract with a supplier or manufacturer if the individual or entity who prepared the Contract Documents has a corporate or financial affiliation with the supplier or manufacturer.

(d) The Owner's officers, employees, or agents shall not engage in the award or administration of this Contract if a conflict of interest, real or apparent, may be involved. Such a conflict may arise when: (i) the employee, officer or agent; (ii) any member of their immediate family; (iii) their partner or (iv) an organization that employs, or is about to employ, any of the above, has a financial interest in the Contractor. The Owner's officers, employees, or agents shall neither solicit nor accept gratuities, favors, or anything of monetary value from the Contractor or subcontractors.

(e) If the Owner finds after a notice and hearing that the Contractor, or any of the Contractor's agents or representatives, offered or gave gratuities (in the form of entertainment, gifts, or otherwise) to any official, employee, or agent of the Owner or EDA in an attempt to secure this Contract or favorable treatment in awarding, amending, or making any determinations related to the performance of this Contract, the Owner may, by written notice to the Contractor, terminate this Contract. The Owner may also pursue other rights and remedies that the law or this Contract provides. However, the existence of the facts on which the Owner bases such findings shall be an issue and may be reviewed in proceedings under the dispute resolution provisions of this Contract.

(f) In the event this Contract is terminated as provided in paragraph (e) of this section, the Owner may pursue the same remedies against the Contractor as it could pursue in the event of a breach of this Contract by the Contractor. As a penalty, in addition to any other damages to which it may be entitled by law, the Owner may pursue exemplary damages in an amount (as determined by the Owner) which shall not be less than three nor more than ten times the costs the Contractor incurs in providing any such gratuities to any such officer or employee.

21. RESTRICTIONS ON LOBBYING

(a) This Contract, or subcontract is subject to 31 U.S.C. § 1352, regarding lobbying restrictions. The section is explained in the common rule, 15 C.F.R. part 28 (55 FR 6736-6748, February 26, 1990). Each bidder under this Contract or subcontract is generally prohibited from using federal funds for lobbying the Executive or Legislative Branches of the Federal Government in connection with this EDA Award.

(b) **Contract Clause Threshold**: This Contract Clause regarding lobbying must be included in each bid for a contract or subcontract exceeding $100,000 of federal funds at any tier under the EDA Award.

(c) **Certification and Disclosure**: Each bidder of a contract or subcontract exceeding $100,000 of federal funds at any tier under the federal Award must file Form CD-512, *Certification Regarding Lobbying – Lower Tier Covered Transactions*, and, if applicable, Standard Form-LLL, *Disclosure of Lobbying Activities*, regarding the use of any nonfederal funds for lobbying. Certifications shall be retained by the Contractor or subcontractor at the next higher tier. All disclosure forms, however, shall be forwarded from tier to tier until received by the Recipient of the EDA Award, who shall forward all disclosure forms to EDA.

(d) **Continuing Disclosure Requirement**: Each Contractor or subcontractor that is subject to the Certification and Disclosure provision of this Contract Clause is required to file a disclosure form at the end of each calendar quarter in which there occurs any event that requires disclosure or that materially affects the accuracy of the information contained in any disclosure form previously filed by such person. Disclosure forms shall be forwarded from tier to tier until received by the Recipient of the EDA Award, who shall forward all disclosure forms to EDA.

(e) **Indian Tribes, Tribal Organizations, or Other Indian Organizations**: Indian tribes, tribal organizations, or any other Indian organizations, including Alaskan Native organizations, are excluded from the above lobbying restrictions and reporting requirements, but only with respect to expenditures that are by such tribes or organizations for lobbying activities permitted by other federal law. An Indian tribe or organization that is seeking an exclusion from Certification and Disclosure requirements must provide EDA with the citation of the provision or provisions of federal law upon which it relies to conduct lobbying activities that would otherwise be subject to the prohibitions in and to the Certification and Disclosure requirements of 31 U.S.C. § 1352, preferably through an attorney's opinion. Note, also, that a non-Indian subrecipient, contractor, or subcontractor under an award to an Indian tribe, for example, is subject to the restrictions and reporting requirements.

22. HISTORICAL AND ARCHAEOLOGICAL DATA PRESERVATION

The Contractor agrees to facilitate the preservation and enhancement of structures and objects of historical, architectural or archaeological significance and when such items are found and/or unearthed during the course of project construction. Any excavation by the Contractor that uncovers an historical or archaeological artifact shall be immediately reported to the Owner and a representative of EDA. Construction shall be temporarily halted pending the notification process and further directions issued by EDA after consultation with the State Historic

Preservation Officer (SHPO) for recovery of the items. *See* the National Historic Preservation Act of 1966 (54 U.S.C. § 300101 *et seq.*, formerly at 16 U.S.C. § 470 *et seq.*) and Executive Order No. 11593 of May 31, 1971.

23. CLEAN AIR AND WATER

Applicable to Contracts in Excess of $150,000

(a) **Definition**. "Facility" means any building, plant, installation, structure, mine, vessel, or other floating craft, location, or site of operations, owned, leased, or supervised by the Contractor or any subcontractor, used in the performance of the Contract or any subcontract. When a location or site of operations includes more than one building, plant, installation, or structure, the entire location or site shall be deemed a facility except when the Administrator, or a designee, of the United States Environmental Protection Agency (EPA) determines that independent facilities are collocated in one geographical area.

(b) In compliance with regulations issued by the EPA, 2 C.F.R. part 1532, pursuant to the Clean Air Act, as amended (42 U.S.C. § 7401 *et seq.*); the Federal Water Pollution Control Act, as amended (33 U.S.C. § 1251 *et seq.*); and Executive Order 11738, the Contractor agrees to:

(1) Not utilize any facility in the performance of this contract or any subcontract which is listed on the Excluded Parties List System, part of the System for Award Management (SAM), pursuant to 2 C.F.R. part 1532 for the duration of time that the facility remains on the list;

(2) Promptly notify the Owner if a facility the Contractor intends to use in the performance of this contract is on the Excluded Parties List System or the Contractor knows that it has been recommended to be placed on the List;

(3) Comply with all requirements of the Clean Air Act and the Federal Water Pollution Control Act, including the requirements of section 114 of the Clean Air Act and section 308 of the Federal Water Pollution Control Act, and all applicable clean air and clean water standards; and

(4) Include or cause to be included the provisions of this clause in every subcontract and take such action as EDA may direct as a means of enforcing such provisions.

24. USE OF LEAD-BASED PAINTS ON RESIDENTIAL STRUCTURES

(a) If the work under this Contract involves construction or rehabilitation of residential structures over $5,000, the Contractor shall comply with the Lead-based Paint Poisoning Prevention Act (42 U.S.C. § 4831). The Contractor shall assure that paint or other surface coatings used in a residential property does not contain lead equal to or in excess of 1.0 milligram per square centimeter or 0.5 percent by weight or 5,000 parts per million (ppm) by weight. For purposes of this section, "residential property" means a dwelling unit, common areas, building exterior surfaces, and any surrounding land, including outbuildings, fences and play equipment affixed to the land, belonging to an owner and available for use by residents, but not

including land used for agricultural, commercial, industrial or other non-residential purposes, and not including paint on the pavement of parking lots, garages, or roadways.

(b) As a condition to receiving assistance under PWEDA, recipients shall assure that the restriction against the use of lead-based paint is included in all contracts and subcontracts involving the use of federal funds.

25. ENERGY EFFICIENCY

The Contractor shall comply with all standards and policies relating to energy efficiency which are contained in the energy conservation plan issued in compliance with the Energy Policy and Conservation Act (42 U.S.C. § 6201) for the State in which the Work under the Contract is performed.

26. ENVIRONMENTAL REQUIREMENTS

When constructing a Project involving trenching and/or other related earth excavations, the Contractor shall comply with the following environmental constraints:

(1) **Wetlands**. When disposing of excess, spoil, or other construction materials on public or private property, the Contractor shall not fill in or otherwise convert wetlands.

(2) **Floodplains**. When disposing of excess, spoil, or other construction materials on public or private property, the Contractor shall not fill in or otherwise convert 100 year floodplain areas delineated on the latest Federal Emergency Management Agency (FEMA) Floodplain Maps, or other appropriate maps, i.e., alluvial soils on Natural Resource Conservation Service (NRCS) Soil Survey Maps.

(3) **Endangered Species**. The Contractor shall comply with the Endangered Species Act, which provides for the protection of endangered and/or threatened species and critical habitat. Should any evidence of the presence of endangered and/or threatened species or their critical habitat be brought to the attention of the Contractor, the Contractor will immediately report this evidence to the Owner and a representative of EDA. Construction shall be temporarily halted pending the notification process and further directions issued by EDA after consultation with the U.S. Fish and Wildlife Service.

27. DEBARMENT, SUSPENSION, INELIGIBILITY, AND VOLUNTARY EXCLUSIONS

As required by Executive Orders 12549 and 12689, *Debarment and Suspension*, 2 C.F.R. Part 180 and implemented by the Department of Commerce at 2 C.F.R. part 1326, for prospective participants in lower tier covered transactions (except subcontracts for goods or services under the $25,000 small purchase threshold unless the subrecipient will have a critical influence on or substantive control over the award), the Contractor agrees that:

(1) By entering into this Contract, the Contractor and subcontractors certify, that neither it nor its principals is presently debarred, suspended, proposed for debarment, declared

ineligible, or voluntarily excluded from participation in this Contract by any federal department or agency.

(2) Where the Contractor or subcontractors are unable to certify to any of the statements in this certification, the Contractor or subcontractors shall attach an explanation to this bid.

See also 2 C.F.R. part 180 and 2 C.F.R. § 200.342.

28. **EDA PROJECT SIGN**

The Contractor shall supply, erect, and maintain in good condition a Project sign according to the specifications provided by EDA. To the extent practical, the sign should be a free standing sign. Project signs shall not be located on public highway rights-of-way. Location and height of signs will be coordinated with the local agency responsible for highway or street safety in the Project area, if any possibility exists for obstructing vehicular traffic line of sight. Whenever the EDA site sign specifications conflict with State law or local ordinances, the EDA Regional Director will permit such conflicting specifications to be modified so as to comply with State law or local ordinance.

29. **BUY AMERICA**

To the greatest extent practicable, contractors are encouraged to purchase American-made equipment and products with funding provided under EDA financial assistance awards.

OMB Number: 0610-0096
Expiration Date: 11/30/2021

EDA PROJECT SIGN

The Contractor shall supply, erect, and maintain in good condition a project sign according to the specifications set forth below:

EDA SITE SIGN SPECIFICATIONS

Size: 4' x 8' x ¾"

Materials: Exterior grade/MDO plywood (APA rating A-B)

Supports: 4" x 4" x 12' posts with 2" x 4" cross branching

Erection: Posts shall be set a minimum of three feet deep in concrete footings that are at least 12" in diameter.

Paint: Outdoor enamel

Colors: Jet Black, Blue (PMS300), and Gold (PMS7406). Specifically, on white background the following will be placed:

The U. S. Department of Commerce seal in blue, black, and gold;

"EDA" in blue;

"U. S. DEPARTMENT OF COMMERCE ECONOMIC DEVELOPMENT

ADMINISTRATION" in black;

"In partnership with" in blue;

(Actual name of the) "EDA Grant Recipient" in black;

Lettering: Specific fonts are named below; positioning will be as shown on the attached illustration.

"U. S. DEPARTMENT OF COMMERCE ECONOMIC DEVELOPMENT ADMINISTRATION" use Bank Gothic Medium - BANK GOTHIC MED

"In partnership with" use Univers™ 55 Oblique - *Univers 55*

(Name of) "EDA Grant Recipient" use Univers™ Extra Black 85 **Univers 85**

Project signs will not be erected on public highway rights-of-way. If any possibility exists for obstruction to traffic line of sight, the location and height of the sign will be coordinated with the agency responsible for highway or street safety in the area.

The EDA Regional Director may permit modifications to these specifications if they conflict with state law or local ordinances.

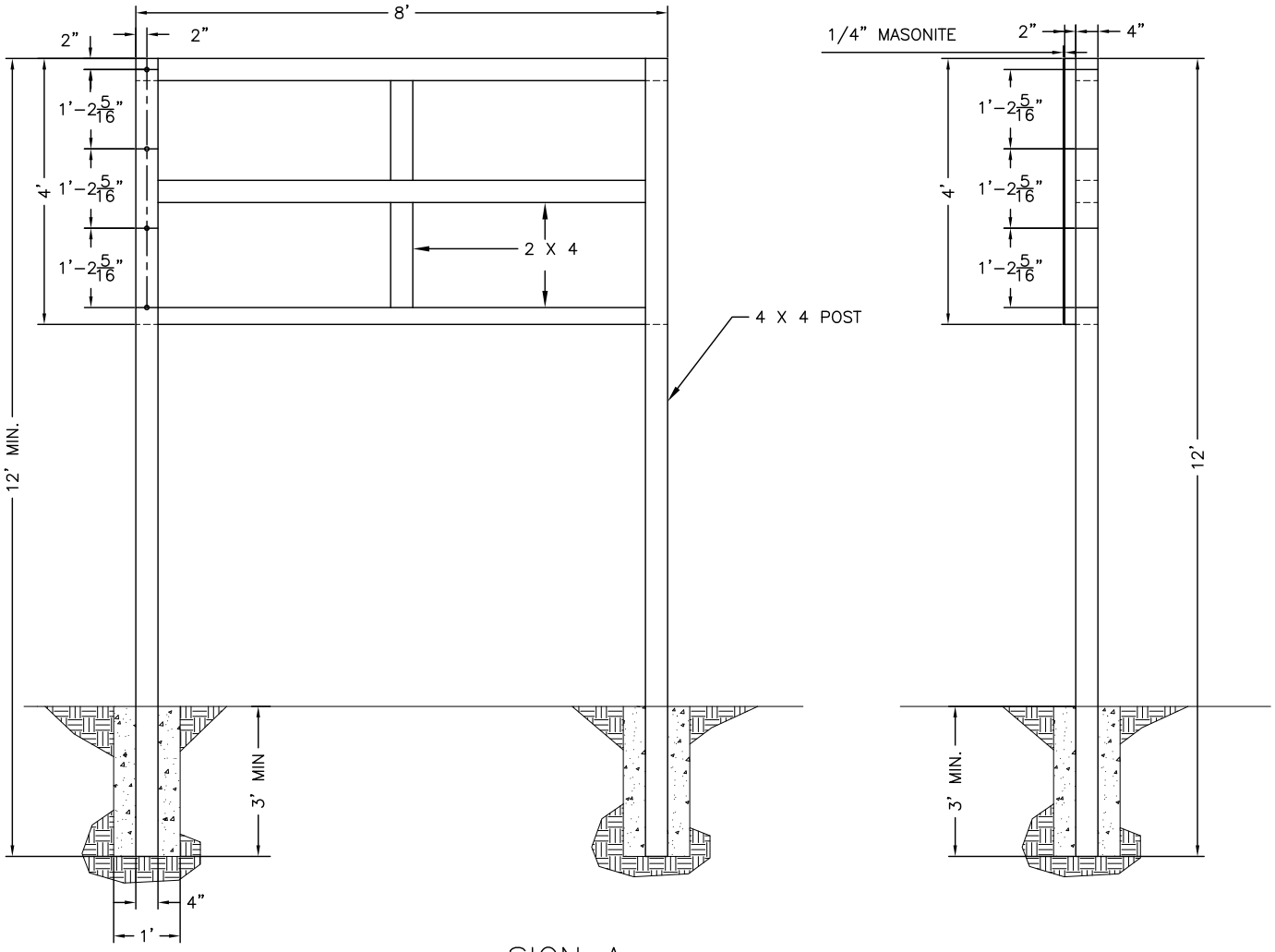

SIGN A
MASONITE SIGN

SCALE: 3/8" = 1'

PROJECT - SIGN A

ECONOMIC DEVELOPMENT ADMINISTRATION

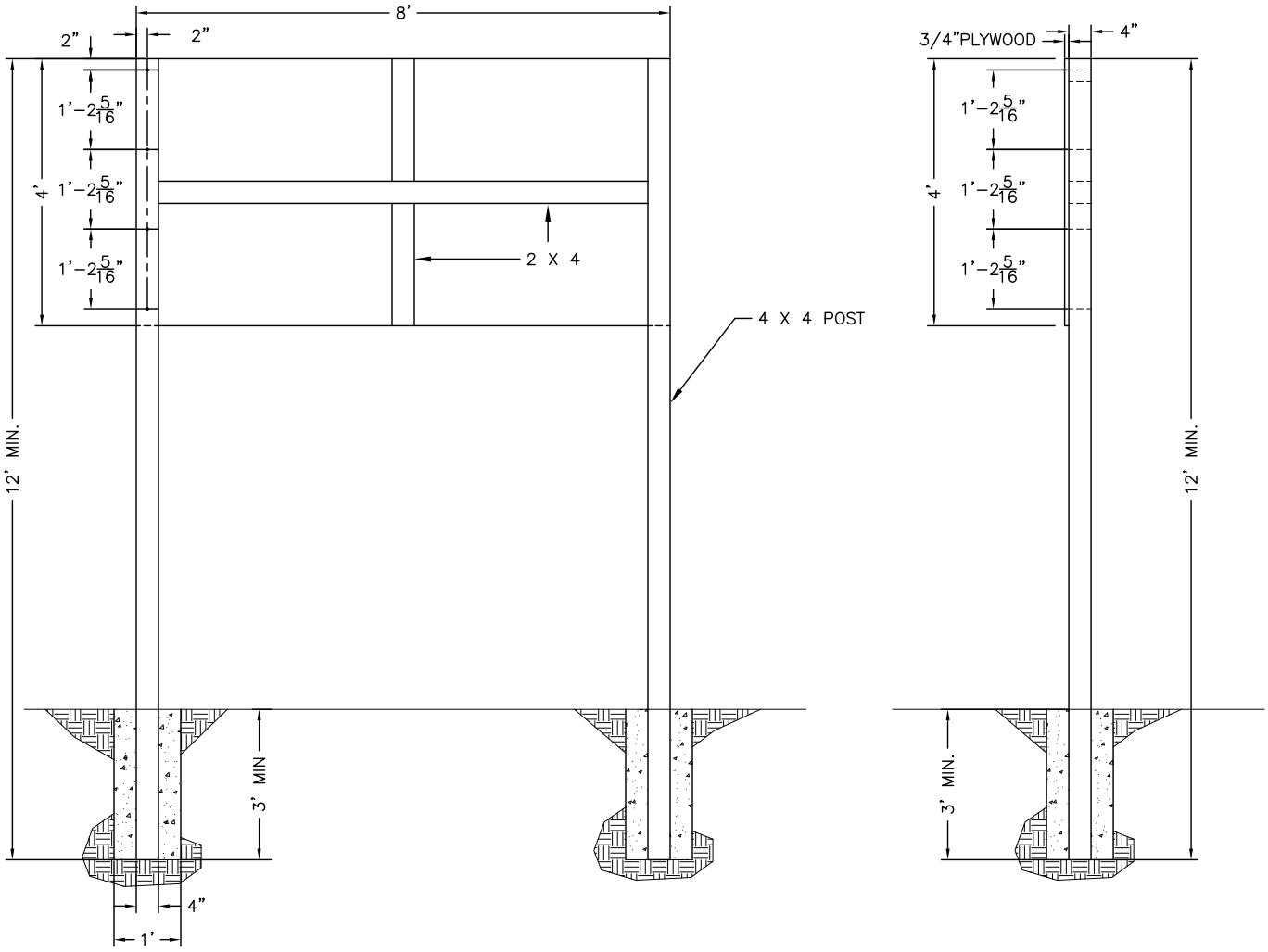

SIGN B
PLYWOOD SIGN
SCALE: 3/8" = 1'

PROJECT - SIGN B

ECONOMIC DEVELOPMENT ADMINISTRATION

EDA

U.S. DEPARTMENT OF COMMERCE ECONOMIC DEVELOPMENT ADMINISTRATION

In partnership with

<EDA Grant Recipient Name>

2.25”

13.5”

1.75”

1.75”

EDA

10”

Black
Blue= PMS300
Gold= PMS7406

2.0”

1.5”

4.0”

3.0”

3.0”

3.75”

15.0”

U.S. Department of Commerce Economic Development Administration

48”

In partnership with

<EDA Grant Recipient Name>

96"

SECTION 01 06 00

REGULATORY REQUIREMENTS

PART 1 GENERAL

1.01 DESCRIPTION

A. The following requirements of Regulatory Agencies having jurisdiction within this project area are considered a part of these Contract Documents.

B. The project construction, including the letting of contracts, shall conform to any applicable requirements of the State, territorial and local laws and/or ordinances provided that these requirements do not conflict with any Federal laws and this sub-chapter.

C. South Carolina Sales Tax: All applicable South Carolina sales tax shall be paid by the Contractor.

a. Use of chemicals: All chemicals used during the project construction or furnished for project operation, whether herbicide, pesticide, disinfectant, polymer, reactant or of other classification, must show approval of EPA or USDA. Use of all such chemicals and disposal of residues shall be in strict conformance with manufacturer's instructions.

D. Safety and Health Regulations: The Contractor shall comply with the Department of Labor Safety and Health Regulations for construction promulgated under the Occupational Safety and Health Act of 1970 (PL 91-596) and under Section 107 of the Contract Work Hours and Safety Standards Act (PL 91-54).

1.02 INSPECTION BY AGENCIES:

A. The representatives of the South Carolina Department of Health and Environmental Control, South Carolina Department of Transportation, Lancaster County, Environmental Protection Agency, and if required, the U.S. Army Corps of Engineers shall have access to the work wherever it is, in preparation or in progress, and the Contractor shall provide proper facilities for such access and inspection.

PART 2 PRODUCTS - NOT USED

PART 3 EXECUTION - NOT USED

END OF SECTION

SECTION 01 23 00

BID ALTERNATES AND SUBSTITUTES

PART 1 GENERAL

1.01 SUMMARY

A. This Section includes administrative and procedural requirements for alternates.

1.02 DEFINITIONS

A. Bid Alternate: A scope of work proposed by the Bidders and stated on the Bid Form for certain work defined in the Bidding Requirements that may be added to or deducted from the Base Bid amount if Owner decides to accept corresponding changes either in the amount of construction to be completed, or in the products, materials, equipment, systems or installation methods described in the Contract Documents. The selection of the successful bidder will be based on the Base Bid amount which does not include Alternate Bid Items.

1. The cost or credit for each alternate is the net addition or deduction from the Contract Sum to incorporate alternates into the Work. No other adjustments are made to the Contract Sum related to this Definition.

B. Base Bid: The amount for which the Bidder proposes to perform Work, not including that work for which Alternative Bid items and Substitutes are also submitted.

1.03 PROCEDURES

A. Coordination: Modify or adjust affected adjacent work as necessary to completely integrate work of the alternate or substitute into the Project.

1. Include as part of each Alternate or Substitute, miscellaneous devices, accessory objects and similar items incidental to or required for a complete installation whether or not indicated as part of the alternate.

B. Notification: Following award of the Contract, Engineer shall notify each party involved, in writing, of the status of each alternate or Substitute equipment. Engineer shall indicate if alternates and substitutes have been accepted, rejected, or deferred for later consideration. Where applicable, Contractor shall include a complete description of negotiated modifications to alternates or Substitutes offered.

C. Execute accepted alternates under the same conditions as other work of the Contract.

PART 2 PRODUCTS - NOT USED

PART 3 EXECUTION

3.01 SCHEDULE OF ALTERNATIVES

A. A complete Schedule of Bid Alternates is detailed within the Bid Form Section 00 41 00 and other Division 0 Sections.

END OF SECTION

SECTION 01 30 00

ADMINISTRATIVE REQUIREMENTS

PART 1 GENERAL

1.01 SECTION INCLUDES

A. Preconstruction meeting.

B. Progress meetings

C. Construction progress schedule

D. Submittals for review, information and project closeout

E. Number of copies of submittals

F. Submittal procedures

1.02 RELATED SECTIONS

A. Section 00 70 00 - General Conditions: Dates for applications for payment

B. Section 01 31 00- Construction Schedules

C. Section 01 70 00 - Execution Requirements

D. Section 01 78 00 - Closeout Submittals

E. Sections throughout these specifications may include other submittals that may be required for construction

1.03 PROJECT COORDINATION

A. Project Manager: Alliance Consulting Engineers, Inc. designee.

B. Coordinate with the Project Manager on the site for allocation of mobilization areas; for field offices and sheds, for access, traffic and parking facilities.

C. During construction, coordinate use of site and facilities through the Project Manager.

D. Comply with Project Manager's procedures for intra-project communications; submittals, reports and records, schedules, coordination drawings, and recommendations; and resolution of ambiguities and conflicts.

E. Make the following types of submittals to the Project Manager:

1. Requests for interpretation.

2. Requests for substitution.

3. Shop drawings, operation and maintenance manuals, product data, and samples.

4. Manufacturer's instructions and field reports.

5. Applications for payment and change order requests.

6. Progress schedules.

7. Coordination drawings.

8. Closeout submittals.

PART 2 PRODUCTS - NOT USED

PART 3 EXECUTION

3.01 PRECONSTRUCTION MEETING

A. Engineer will schedule a meeting within thirty (30) days after the Owner has determined the low bidder and may be held prior to issuance of the Notice to Proceed when required by regulatory agencies having jurisdiction. In any event, the Meeting will be held prior to actual start of construction.

B. For the individuals designated by the Contractor, his subcontractors and suppliers attending the Preconstruction Meeting, provide required authority to commit the entities they represent to solutions agreed upon in the meeting.

C. Advise the Engineer at least twenty-hours (24) in advance of the meeting to add items to the agenda.

D. Attendance Required:

1. Owner.

2. Engineer.

3. Contractor.

4. Subcontractors, as needed.

5. Utility Providers

6. Permit Agents

E. Agenda:

1. Execution of Owner-Contractor Contract Agreement.

2. Distribution of Contract Documents.

3. Arrangement of Contractor's forces and personnel and those of subcontractors, material suppliers and the Engineer.

4. Channels and procedures for communication.

5. Designation of personnel representing the parties to Contract, Contractor, Owner and Engineer.

6. Procedures and processing of field decisions, submittals and substitutions, applications for payments, proposal request, Change Orders and Contract

closeout procedures.

7. Scheduling.

8. Scheduling activities of a Geotechnical Engineer

9. Rules and regulations governing performance of the Work for security, quality control, housekeeping and related matters.

F. Preconstruction Meeting minutes will be recorded and distributed within ten (10) days after meeting to participants, with three (3) copies to the Contractor and the required number of copies to the Owner, and those affected by decisions being made.

3.02 PROGRESS MEETINGS

A. Engineer will make arrangements for meetings, prepare agenda with copies for participants, and preside at meetings. Contractor must advise the Engineer within forty-eight (48) hours of advance notice of the meeting to add items to the agenda.

B. The Contractor's relations with his subcontractors and material suppliers, and discussions with regards to these items are the Contractor's responsibility and normally not part of the project meeting agenda.

C. For the individuals designated by the Contractor to attend and participate in the project meetings, provide required authority to commit the Contractor to solutions agreed upon in the project meetings.

D. Attendance Required: Job superintendent, major Subcontractors and suppliers, Owner, Engineer, as appropriate to agenda topics for each meeting.

E. Meeting Schedule:

1. Project Meetings will be held monthly or as determined by the Engineer and Owner during construction.

2. Coordinate as necessary to establish mutually acceptable schedule for meetings.

F. Meeting Location: The Engineer will establish the meeting location, and where possible the meetings will be held at the project site or a location near the project site.

G. Agenda:

1. Review minutes of previous meetings.

2. Review of Work progress.

3. Field observations, problems, and decisions.

4. Identification of problems that impede, or will impede, planned progress.

5. Review of submittals schedule and status of submittals.

6. Maintenance of progress schedule.

7. Corrective measures to regain projected schedules

8. Planned progress during succeeding work period.

9. Maintenance of quality and work standards.

10. Effect of proposed changes on progress schedule and coordination.

11. Other business relating to Work.

H. Project Meeting minutes will be recorded and distributed within ten (10) days after meeting to participants, with three (3) copies to the Contractor and the required number of copies to the Owner, and those affected by decisions made.

I. Revisions to Meeting Minutes:

1. Unless published minutes are challenged in writing prior to the next regularly scheduled progress meeting, the minutes will be accepted as properly stating the activities and decisions of the meeting.

2. Individuals challenging published minutes shall reproduce and distribute copies of the challenge for review by all parties affected.

3. Challenge to minutes shall be settled as priority portion of "old business" at the next regularly scheduled meeting.

3.03 CONSTRUCTION PROGRESS SCHEDULE

A. Comply with Section 01 31 00 - Construction Schedules

B. Submit updated schedule with each Application for Payment.

3.04 SUBMITTALS FOR REVIEW

A. When the following are specified in individual sections, submit them for review:

1. Product data.

2. Shop drawings.

3. Samples for selection.

4. Samples for verification.

B. Submit to Engineer for review for the limited purpose of checking for conformance with information given and the design concept expressed in the Contract Documents.

C. Samples

1. Provide sample or samples identical to the precise article proposed to be provided. Identify as described under “Identification of submittals" below.

2. Number of samples required:

a. Unless otherwise specified, submit samples in the quantity which is required to be returned, plus one which will be retained by the Engineer.

b. By pre-arrangement in specific cases, a single sample may be submitted for review and, when approved, be installed in the work at a location agreed upon by the Engineer.

D. Colors and Patterns

1. Unless the precise color and pattern is specifically called out in the Contract Documents, and whenever a choice of color or pattern is available in the specified products, submit accurate color and pattern charts to the Engineer for selection and confirmation with the Owner.

E. After review, provide copies and distribute in accordance with SUBMITTAL PROCEDURES article below.

3.05 SUBMITTALS FOR INFORMATION

A. When the following are specified in individual sections, submit them for information:

1. Design data.

2. Certificates.

3. Test reports.

4. Inspection reports.

5. Manufacturer's instructions and literature.

6. Manufacturer's field reports.

7. Other types indicated.

B. Submit for Engineer's knowledge as contract administrator or for Owner

3.06 SUBMITTALS FOR PROJECT CLOSEOUT

A. When the following are specified in individual sections, submit them at project closeout:

1. Project record documents.

2. Operation and maintenance data.

3. Warranties and Bonds.

4. Keys and Keying Schedule.

5. Spare parts and manuals.

6. Evidence of payment and release of liens per the General Conditions.

7. Section 00 65 19.13 - Contractor's Affidavit.

8. Other types as indicated.

B. Submit for Owner's benefit during and after project completion.

3.07 NUMBER OF COPIES OF SUBMITTALS

A. Documents for Review:

1. Shop Drawings

a. Scale and Measurement: Make shop drawings accurately to a scale of sufficiently large to show all pertinent aspects of the item and its method of connection to the Work.

b. Large Prints (11" X 17" or larger):

i. Submit shop drawings in the form of white copies.

ii. Blueprints will not be acceptable.

c. Manufacturer's Literature:

i. Where contents of submitted literature from manufacturers includes data not pertinent to the submittal, clearly show which portions of the contents are being submitted for review.

ii. Submit the number of copies which are required to be returned, plus three (3) copies which will be retained by the Engineer.

d. Do not begin fabrication of equipment or materials prior to Engineer's approval of shop drawings.

B. Documents for Information: Submit three (3).

C. Documents for Project Closeout: Make one (1) reproduction of submittal originally reviewed. Submit one (1) extra of submittals for information.

D. Samples: Submit the number specified in individual specification sections; one (1) of which will be retained by Engineer.

1. After review, produce duplicates.

2. Retained samples will not be returned to Contractor unless specifically so stated.

3.08 SUBMITTAL PROCEDURES

A. Transmit each submittal with a Cover Letter that stipulates that the items submitted comply or do not comply with the full extent of the specifications. The Cover Letter must also include an explanation of why the items submitted are considered equal to the items specified. Failure to submit a Cover Letter will result in a rejection of the submittal.

B. Timing of Submittals:

1. Within fifteen (15) calendar days after the Contractor has received the Owner's

notice to proceed, submit:

a. Schedule for submittals including specification section, type of submittal and submittal date.

b. Construction schedule.

c. Schedule of partial payment requests.

2. Make submittals of shop drawings, samples, substitution requests and other items in accordance with the provisions of this Section.

C. Quality Assurance:

1. Coordination of submittals:

a. Prior to each submittal, carefully review and coordinate all aspects of each item being submitted.

b. Verify that each item and the submittal for it conform in all respects with the specified requirements.

c. By affixing the Contractor's signature to each submittal, certify that this coordination has been performed.

2. The following products do not require further approval except for interface within the Work and where otherwise indicated.

a. Products specified by reference to standard specifications such as ASTM, AWWA, and similar standards.

b. Products specified by manufacturer's name and catalog model number.

3. Or equal:

a. Where the phrase "or equal" occurs in the Contract Documents, do not assume that the materials, equipment or methods will be considered as equal unless the item has been specifically so approved for this Work by the Engineer.

b. The decision of the Engineer shall be final.

4. The Engineer shall assume that no shop drawing or related submittal comprises a variation unless the Contractor advises the Engineer otherwise in writing.

D. Sequentially number submittal in the Cover Letter. Revise submittals with original number and a sequential alphabetic suffix.

E. Before submitting a shop drawing or any related material, Contractor shall:

1. Review each such submission for conformance with the means, methods, techniques, sequences, and operations of construction, and safety precautions and programs incidental thereto, all of which are the sole responsibility of Contractor.

2. Approve each such submission before submitting it.

3. Stamp each such submission before submitting it.

F. Shop drawings and related materials shall be returned with comments provided that each submission has been specified and is stamped by the Contractor.

G. Shop drawings or material not specified or which have not been approved by the Contractor shall be returned without comment.

H. Apply Contractor's stamp, signed or initialed certifying that review, approval, verification of Products required, field dimensions, adjacent construction Work and coordination of information is in accordance with the requirements of the Work and Contract Documents. The following stamp shall be used on all shop drawings: "This Shop Drawing has been reviewed by [Name of Contractor] and approved in accordance with the ways, means, methods, techniques, sequences and procedures associated with the project construction. [Name of Contractor] has approved these Shop Drawings in accordance with safety precautions and programs incidental thereto, and warrants that these Shop Drawings comply with the Contract Documents and includes no variations from the specifications."

Signature
Name and Title (Please Print)
Date

I. Identification of Submittals

1. Consecutively number all submittals.

a. When material is resubmitted for any reason, transmit under a new letter of transmittal and with a new transmittal number.

b. On resubmittals, cite the original submittal number for reference.

2. Accompany each submittal with a letter of transmittal showing all information required for identification and checking.

3. On at least the first page of each submittal, and elsewhere as required for positive identification, show the submittal number in which the item was included.

4. Maintain an accurate submittal log for the duration of the work, showing current status of all submittals at all times. Make the submittal log available to the Engineer for his review upon request.

J. Unrequired submittals will not be reviewed by the Engineer.

K. Submittals required by the Contractor of his subcontractors, such as drawings, setting diagrams or similar information needed to coordinate the construction, shall remain between the Contractor and his subcontractors and these submittals will not be reviewed by the Engineer.

L. Grouping of Submittals

1. Unless otherwise specified, make submittals in groups containing all associated items to assure that information is available for checking each item when it is received.

a. Partial submittals may be rejected as not complying with the provisions of

the Contract.

b. The Contractor may be held liable for delays so occasioned.

M. Timing of Submittals

1. Make submittals far enough in advance of scheduled dates for installation to provide time required for reviews, for securing necessary approvals, for possible revisions and resubmittals, and for placing orders and securing delivery.

N. Resubmittal Schedule

1. For submittals marked "Furnish as Corrected" by the Engineer, resubmittal shall be within fifteen (15) days of the review date shown on the Engineer's shop drawing review stamp.

2. For submittals marked "Revise and Resubmit", "Submit Specified Item", or "Rejected", resubmittal shall be within fifteen (15) days of the review date shown on the Engineer's shop drawing review stamp.

O. Engineer's Review

1. Review by the Engineer does not relieve the Contractor from responsibility for errors which may exist in the submitted data.

2. Revisions:

a. Make revisions required by the Engineer.

i. If the Contractor considers any required revision to be a change, he shall so notify the Engineer as provided for in the General Conditions.

ii. Make only those revisions directed or approved by the Engineer.

iii. Submittals which have been reviewed and returned to the Contractor marked "Revise and Resubmit" or "Rejected" and which are resubmitted and not in an approved state, will not be reviewed a third time unless payment for the third and any subsequent review is by the Contractor. The engineering costs for review shall be equal to the Engineer's charges to the Owner under the terms of the Engineering Agreement with the Owner.

P. Deliver submittals to Engineer at business address.

Q. Schedule submittals to expedite the Project, and coordinate submission of related items.

R. For each submittal for review, allow twenty-five (25) working days excluding delivery time to and from the Contractor.

S. Identify variations from Contract Documents and Product or system limitations that may be detrimental to successful performance of the completed Work.

T. Provide space for Contractor and Engineer review stamps.

U. When revised for resubmission, identify all changes made since previous submission.

V. Distribute copies of reviewed submittals as appropriate. Instruct parties to promptly report any inability to comply with requirements.

W. Submittals not requested will not be recognized or processed.

END OF SECTION

SECTION 01 31 00

CONSTRUCTION SCHEDULES

PART 1 GENERAL

1.01 DESCRIPTION

A. Work included: Construction Schedules are to be prepared to provide assurance of project planning and the execution of the work so that the construction is completed within the construction period as stated in the Contract Documents, and to provide Alliance Consulting Engineers, Inc. a means to evaluate the progress of the work.

B. Related work:

1. Documents affecting work of this Section include, but are not necessarily limited to, General Conditions, and Sections in Division 01 of these Specifications.

2. General Conditions and the requirements associated with the progress schedule.

3. Construction period: As related to the executed contract.

C. Definitions: "Day", means calendar day.

1.02 QUALITY ASSURANCE

A. The Contractor is to provide a scheduler that is thoroughly trained and experienced in preparing construction schedule data, and in preparing and issuing periodic schedule reports as stated below.

B. Perform data preparation that includes analysis, charting and updating as required.

C. Reliance upon the approved schedule:

1. Once approved by Alliance Consulting Engineers, Inc., the construction schedule will be an integral part of the Contract and will establish interim completion dates for the various construction tasks specified in the Contract.

2. The Contractor agrees and understands that the failure of the Owner to exercise this option either to order the Contractor to expedite an activity or to expedite the activity by other means shall not be considered a precedent for any other scheduled activities.

1.03 SUBMITTALS

A. Comply with provisions of Section 01 30 00 Administrative Requirements.

B. Once the preliminary schedule has been reviewed and approved by Alliance Consulting Engineers, Inc., within ten (10) calendar days, the Contractor must submit one (1) reproducible copy and four (4) prints of a preliminary construction schedule prepared in accordance with Part 3 of this Section.

C. Once the Contractor receives final review and approval of the preliminary construction schedule, the Contractor must submit within ten (10) calendar days one (1) reproducible copy and four (4) prints of a construction schedule prepared in accordance with Part 3 of

this Section.

D. The Contractor must also provide on the first working day of each month, four (4) prints of the construction schedule that has been updated in accordance with Part 3 of this Section.

PART 2 PRODUCTS

2.01 CONSTRUCTION ANALYSIS

A. The construction schedule must illustrate graphically by bar chart the order and interdependence of all construction activities required to complete the work, and the sequence in which the construction activities are to be completed. All construction activities must be planned by the Contractor and his project field superintendent in coordination with all subcontractors whose work is shown on the diagram and any other work being completed on the project site by other contractors that requires coordination.

1. The graphical chart must be a two (2) line bar chart; with one (1) bar for planned activities, and one (1) bar for actual activity completion.

B. Include, but do not necessarily limit indicated activities to:

1. Project mobilization.

2. Submittal and approval of shop drawings and sample data.

3. Procurement of equipment and critical materials.

4. Fabrication of special material and equipment, and its installation and testing.

5. Each construction activity that is critical to the work being performed.

6. All activities by Alliance Consulting Engineers, Inc. that affect progress, required dates for completion, or both, for all and each part of the Work.

7. All activities by other contractors that have to be coordinated with the work being completed under this Contract.

8. Final cleanup.

9. Final inspecting and testing.

PART 3 EXECUTION

3.01 PRELIMINARY ANALYSIS

A. Contents:

1. Outline the activities of the Contractor for the period between receipt of Notice to Proceed and submittal of construction schedule.

2. Outline the Contractor's approach to the remaining work to be completed.

3. Outline the costs of all activities scheduled before submittal and approval of the construction schedule.

3.02 CONSTRUCTION SCHEDULE

A. Provide a construction schedule that incorporates all of the revisions from review of the preliminary analysis.

3.03 PERIODIC REPORTS

A. Provide monthly updates of the approved construction schedule.

1. Indicate "actual" progress for each activity on the bar chart.

2. Provide written narrative summary of revisions causing delay in the construction, and an explanation of corrective actions being taken or proposed.

3.04 REVISIONS

A. Provide a revised construction schedule periodically that includes delays, early completion, etc.

B. Any revisions to the construction schedule must be approved by Alliance Consulting Engineers, Inc. before acceptance.

END OF SECTION

SECTION 01 32 00

PROJECT CONSTRUCTION SEQUENCE AND PROVISIONS

PART 1 GENERAL

1.01 CONSTRUCTION AREAS

A. The Contractor shall limit his use of the construction areas for work and for storage to allow for:

1. Work by other Contractors.

2. Owner use.

3. Public use.

B. Coordinate use of work site under direction of Engineer.

C. Assume full responsibility for the protection and safekeeping of materials and products under this Contract, stored on the site.

D. Move any stored products, under Contractor's control, which interfere with operations of the OWNER or separate Contractor.

E. Obtain and pay for the use of additional storage of work areas needed for operations.

1.02 SPECIFICATIONS

A. Specifications

The Technical Specifications consist of three parts: General, Products and Execution. The General Section contains General Requirements which govern the work. Products and Execution modify and supplement these by detailed requirements of the work and shall always govern whenever there appears to be a conflict.

B. Intent

All work called for in the Specifications applicable to this Contract, but not shown on the plans in their present form, or vice versa, shall be of like effect as if shown or mentioned in both. Work not specified in either the plans or the Specifications, but involved in carrying out their intent or in the complete and proper execution of the work is required and shall be performed by the Contractor as though it were specifically delineated or described.

The apparent silence of the specifications as to any detail, or the apparent omission from them of a detailed description concerning any work to be done and materials to be furnished, shall be regarded as meaning that only the best general practice is to prevail and that only material and workmanship of the best quality is to be used, and interpretation of these specifications shall be made upon that basis. The inclusion of the General Requirements (or work specified elsewhere) in the General part of the specifications is only for the convenience of the Contractor, and shall not be interpreted as a complete list of related Specification Sections.

1.03 WORK IN PROGRESS

The Contractor shall furnish personnel and equipment which will be efficient, appropriate, and adequately sized to secure a satisfactory quality of work and a rate of progress which will insure the

completion of the work within the time stipulated in the Proposal. If at any time such personnel appears to the Engineer to be inefficient, inappropriate, or insufficient for securing the quality of work required for producing the rate of progress aforesaid, he may order the Contractor to increase the efficiency, change the character, or increase the personnel and equipment, and the Contractor shall conform to such order. Failure of the Engineer to give such order shall in no way relieve the Contractor of his obligations to secure the quality of the work and rate of progress required.

1.04 UTILITY SYSTEMS AND FACILITIES

A. The Contractor shall interrupt water, telephone, power, cable TV, sewer, gas or other related utility services and disturb the normal functioning of the system as little as possible. He shall notify the Engineer and the appropriate agency well in advance of any requirements for dewatering, isolating, or relocating a section of a utility, so that necessary arrangements may be made with the appropriate agency.

B. The Contractor shall assume full responsibility for the protection of all buildings, structures, and utilities, public or private, including poles, signs, services to buildings, utilities in the street, gas pipes, water pipes, hydrants, sewers, storm drains and electric and telephone cables, whether or not they are shown on the Drawings. The Contractor shall carefully support and protect all such structures and utilities from injury of any kind. Any damage resulting from the Contractor's operations shall be repaired by him/her at his/her expense.

C. The Contractor shall bear full responsibility for obtaining locations of all underground structures and utilities (including existing water services, drain lines, and sewers). Services to buildings shall be maintained, and all costs or charges resulting from damage thereto shall be paid by the Contractor.

D. Protection and temporary removal and replacement of existing utilities and structures as described in this Section shall be a part of the work under the Contract and no separate payment will be made for this work.

E. If, in the opinion of the Engineer, permanent relocation of a utility owned by the Owner is required, he may direct the Contractor in writing, to perform the work. Work so ordered will be paid for at the contract unit prices, if applicable, or as extra work. If relocation of a privately owned utility is required, the Owner will notify the utility to perform the work as expeditiously as possible. The Contractor shall fully cooperate with the Owner and utility and shall have no claim for delay due to such relocation. The Contractor shall notify all utility companies in writing at least 48 hours (excluding Saturdays, Sundays, and legal holidays) before excavating near their utilities.

F. The Contractor shall be responsible to maintain water, telephone, power, cable TV, sewer, gas and other related utilities throughout construction at no additional cost to the Owner.

G. The Contractor shall fully cooperate with all private and public utilities during the installation of new facilities, or relocation of existing facilities. The Contractor shall coordinate his work accordingly and shall have no claim except for time extension for delays associated with the proposed utility improvements.

1.05 TEST PITS

A. Test pits for the purpose of locating underground pipeline or structures in advance of the construction shall be excavated and backfilled by the Contractor at the direction of the Engineer. Test pits shall be backfilled immediately after their purpose has been satisfied and the surface restored and maintained in a manner satisfactory to the Engineer. No separate payment will be made.

1.06 CARE AND PROTECTION OF PROPERTY

A. The Contractor shall be responsible for the preservation of all public and private property, and shall use every precaution necessary to prevent damage thereto. If any direct or indirect damage is done to public or private property by or on account of any act, omission, neglect, or misconduct in the execution of the work on the part of the Contractor, such property shall be restored by the Contractor, at his expense, to a condition similar or equal to that existing before the damage was done, or he shall make good the damage in another manner acceptable to the Engineer.

B. All sidewalks and driveways which are disturbed by the Contractor's operations shall be restored to their original or better condition by the use of similar or comparable materials.

C. Along the location of this work all fences, walks, bushes, trees, shrubbery, and other physical features shall be protected and restored in a thoroughly workmanlike manner. Fences and other features removed by the Contractor shall be replaced in the location indicated by the Engineer as soon as conditions permit. All grass areas beyond the limits of construction which have been damaged by the Contractor shall be regraded and seeded.

D. Trees close to the work shall be boxed or otherwise protected against injury. The Contractor shall trim all branches that are liable to damage because of his operations, but in no case shall any tree be cut or removed without prior notification of the tree warden. All injuries to bark, trunk, limbs, and roots of trees shall be repaired by dressing, cutting, and painting according to approved methods, using only approved tools and materials.

E. The protection, removal, and replacement of existing physical features along the line of work shall be a part of the work under the Contract, and all costs in connection therewith shall be included in the unit and/or lump sum prices established under other items in the Proposal.

1.07 CLEAN-UP

A. During the course of the work, the Contractor shall keep the site of his operations in as clean and neat of a condition as is possible. He shall dispose of all residue resulting from the construction work and, at the conclusion of the work, he shall remove and haul away any surplus excavation, broken pavement, brick, lumber, equipment, temporary structures, and any other refuse remaining from the construction operations, and shall leave the entire site of the work in a neat and orderly condition.

B. In order to prevent environmental pollution arising from the construction activities related to the performance of this Contract, the Contractor and his/her subcontractors shall comply with all applicable Federal, State and local laws and regulations concerning waste material disposal, as well as the specific requirements stated in this Section and elsewhere in the Specifications.

C. The Contractor is advised that the disposal of excess excavated material in wetlands, stream corridors and plains is strictly prohibited even if the permission of the property owner is obtained. Any violation of this restriction by the Contractor or any person employed by him, will be brought to the immediate attention of the responsible regulatory agencies, with a request that appropriate action be taken against the offending parties. The Contractor will be responsible to pay all fines, remove the fill, and restore the area impacted.

1.08 PROTECTION OF CONSTRUCTION AND EQUIPMENT

A. All newly constructed work shall be carefully protected from injury in any way. No wheeling or walking or placing of heavy loads on it shall be allowed and all portions injured shall be

reconstructed by the Contractor at his own expense.

B. All structures shall be protected in a manner approved by the Engineer. Should any of the structures become heaved, cracked, or otherwise damaged, all such damaged portions of the work shall be completely repaired and made good by the Contractor, at his own expense, and to the satisfaction of the Engineer. If, in the final inspection of the work, any defects, faults, or omissions are found, the Contractor shall cause the same to be repaired or removed and replaced by proper materials and workmanship without extra compensation for the materials and labor required. Further, the Contractor shall be fully responsible for the satisfactory maintenance and repair of the construction and other work undertaken herein, for at least the guarantee period described in the Contract.

C. Further, the Contractor shall take all necessary precautions to prevent damage to any structure due to water pressure during and after construction and until such structure is accepted and taken over by the Owner.

1.09 PROJECT SEQUENCING

Construct work in stages to accommodate operation of existing facilities during construction period. Coordinate construction schedule and operations with the Owner and the Engineer. Owner reserves the right to place facilities, taken out of service by Contractor, back into service on emergency basis upon notification to Contractor.

PART 2 PRODUCTS – NOT USED

PART 3 EXECUTION – NOT USED

END OF SECTION

SECTION 01 40 00

QUALITY REQUIREMENTS

PART 1 GENERAL

1.01 SECTION INCLUDES

A. References and standards.

B. Quality assurance submittals

C. Control of installation.

D. Inspection services.

E. Cooperate with the Owner's selected testing agency and all others responsible for testing and inspecting the work.

F. Provide such other testing and inspecting as are specified to be furnished by the Contractor in this Section and/or elsewhere in the Contract Documents.

1.02 RELATED REQUIREMENTS

A. Section 00 70 00 – Standard General Conditions of the Construction Contract

B. Section 01 30 00 - Administrative Requirements

C. Section 01 60 00 - Product Requirements

D. Requirements for testing may be described in various Sections of these specifications.

E. Where no testing requirements are described, but the Owner decides that testing is required, the Owner may require such testing to be performed under current pertinent standards for testing. Payment for such testing will be made as described in this Section.

1.03 ADDITIONAL WORK INCLUDED:

A. Selection of testing laboratory: The contractor shall provide all necessary testing by a prequalified independent testing laboratory. This information shall be provided to the Engineer for approval during the shop drawing review process.

B. Payment for initial testing: The selected contractor's contract shall provide all necessary services of the testing laboratory within the contract prices to the owner as further described in Article 2.1 of this Section.

C. Tests at point of manufacture as specified in other Sections of these documents are to be made with all costs borne by the Contractor.

1.04 REFERENCE STANDARDS

A. ASTM C 1077 - Standard Practice for Laboratories Testing Concrete and Concrete Aggregates for Use in Construction and Criteria for Laboratory Evaluation; 2009.

B. ASTM D 3740 - Standard Practice for Minimum Requirements for Agencies Engaged in

the Testing and/or Inspection of Soil and Rock as Used in Engineering Design and Construction; 2008.

C. ASTM E 329 - Standard Specification for Agencies Engaged Construction Inspection and/or Testing; 2009.

1.05 SUBMITTALS

A. Testing Agency Qualifications:

1. Prior to start of Work, submit agency name, address, and telephone number, and names of full time registered Engineer and responsible officer.

B. Test Reports: After each test/inspection, promptly submit three (3) copies of report to Alliance Consulting Engineers, Inc. and to Owner.

1. Include:

a. Date issued.

b. Project title and number

c. Name of inspector

d. Date and time of sampling or inspection

e. Identification of product and specifications section

f. Location in the Project

g. Type of test/inspection

h. Date of test/inspection

i. Results of test/inspection

j. Conformance with Contract Documents

k. When requested by Alliance Consulting Engineers, Inc., provide interpretation of results.

2. Test report submittals are for Alliance Consulting Engineers Inc.'s knowledge as contract administrator for the limited purpose of assessing conformance with information given and the design concept expressed in the contract documents, or for Owner information

C. Certificates: When specified in individual specification sections, submit certification by the manufacturer and Contractor or installation/application subcontractor to Alliance Consulting Engineers, Inc., in quantities specified for Product Data.

1. Indicate material or product conforms to or exceeds specified requirements. Submit supporting reference data, affidavits, and certifications as appropriate.

2. Certificates may be recent or previous test results on material or product, but must be acceptable to Alliance Consulting Engineers, Inc.

D. Manufacturer's Instructions: When specified in individual specification sections, submit printed instructions for delivery, storage, assembly, installation, start-up, adjusting, and finishing, for the Owner's information. Indicate special procedures, perimeter conditions requiring special attention, and special environmental criteria required for application or installation.

1.06 REFERENCES AND STANDARDS

A. For products and workmanship specified by reference to a document or documents not included in the Project Manual, also referred to as reference standards, comply with requirements of the standard, except when more rigid requirements are specified or are required by applicable codes.

B. Conform to reference standard of date of issue current on date of Contract Documents, except where a specific date is established by applicable code.

C. Obtain copies of standards where required by product specification sections.

D. Maintain copy at project site during submittals, planning, and progress of the specific work, until Substantial Completion.

E. Should specified reference standards conflict with Contract Documents, request clarification from Alliance Consulting Engineers, Inc. before proceeding.

F. Neither the contractual relationships, duties, nor responsibilities of the parties in Contract nor those of Alliance Consulting Engineers, Inc. shall be altered from the Contract Documents by mention or inference otherwise in any reference document.

1.07 QUALITY ASSURANCE

A. The testing laboratory will be qualified to the Owner's approval in accordance with ASTM E 329.

B. Testing, when required, will be in accordance with all pertinent codes and regulations, and with selected standards of the American Society for Testing and Materials.

1.08 PRODUCT HANDLING

A. Comply with pertinent provisions of Section 01 60 00 Product Requirements.

B. Promptly process and distribute required copies of test reports and related instructions to assure necessary retesting and replacement of materials with the least possible delay in progress of the work.

PART 2 PRODUCTS

2.01 PAYMENT FOR TESTING

A. Testing Services:

1. The Contractor will pay for all testing services required by the contract documents and manufacturer's recommendations except for concrete, aggregate and compaction testing.

2. When initial tests indicate non-compliance with the Contract Documents, any and all retesting and consulting required to provide compliance with the Contract

Documents will the responsibility of the contractor at no additional costs to the Owner.

3. Retesting: When initial tests indicate non-compliance with the Contract Documents, subsequent re-testing occasioned by the non-compliance shall be performed by the same testing agency.

2.02 CODE COMPLIANCE TESTING

A. Inspections and tests required by codes or ordinances, or by a plan approval authority, and which are made by a legally constituted authority, shall be the responsibility of and shall be paid for by the Contractor, unless otherwise provided in the Contract Documents.

2.03 CONTRACTOR'S CONVENIENCE TESTING

A. Inspecting and testing performed exclusively for the Contractor's convenience shall be the sole responsibility of the Contractor.

PART 3 EXECUTION

3.01 CONTROL OF INSTALLATION

A. Monitor quality control over suppliers, manufacturers, products, services, site conditions, and workmanship, to produce Work of specified quality.

B. Comply with manufacturers' instructions, including each step in sequence.

C. Should manufacturers' instructions conflict with Contract Documents, request clarification from Alliance Consulting Engineers, Inc. before proceeding.

D. Comply with specified standards as minimum quality for the Work except where more stringent tolerances, codes, or specified requirements indicate higher standards or more precise workmanship.

E. Have Work performed by persons qualified to produce required and specified quality.

F. Verify that field measurements are as indicated on shop drawings or as instructed by the manufacturer.

G. Secure products in place with positive anchorage devices designed and sized to withstand stresses, vibration, physical distortion, and disfigurement.

3.02 CONTRACTOR TESTING COORDINATION:

A. Cooperation with Testing Laboratory:

1. Representatives of the testing laboratory shall have access to the work at all times and at all locations where the work is in progress. Provide facilities for such access to enable the laboratory to perform its functions properly.

B. Taking Specimens:

1. All specimens and samples for testing, and deliveries to laboratory, unless otherwise provided in the Contract Documents, shall be taken by the testing personnel. All sampling equipment and personnel will be provided by the testing laboratory. All deliveries of specimens and samples to the testing laboratory will be performed by the testing laboratory.

3.03 SCHEDULES FOR TESTING

A. Establishing schedule:

1. By advance discussion with the testing laboratory selected by the Owner, determine the time required for the laboratory to perform its tests and to issue each of its findings.

2. Provide all required time within the construction schedule.

B. Revising schedule: When changes of construction schedule are necessary during construction, coordinate all such changes with the testing laboratory as required.

C. Adherence to schedule: When the testing laboratory is ready to test according to the established schedule, but is prevented from testing or taking specimens due to incompleteness of the work, all extra charges for testing attributable to the delay may be back-charged to the Contractor and shall not be borne by the Owner.

3.04 TESTING AND INSPECTION

A. Testing Agency Duties:

1. Provide qualified personnel at site. Cooperate with Alliance Consulting Engineers, Inc. and Contractor in performance of services.

2. Perform specified sampling and testing of products in accordance with specified standards.

3. Ascertain compliance of materials and mixes with requirements of Contract Documents.

4. Promptly notify Alliance Consulting Engineers, Inc. and Contractor of observed irregularities or non-conformance of Work or products.

5. Perform additional tests and inspections required by Alliance Consulting Engineers, Inc.

6. Submit reports of all tests/inspections specified.

B. Limits on Testing/Inspection Agency Authority:

1. Agency may not release, revoke, alter, or enlarge on requirements of Contract Documents.

2. Agency may not approve or accept any portion of the Work.

3. Agency may not assume any duties of Contractor.

4. Agency has no authority to stop the Work.

C. Contractor Responsibilities:

1. Provide incidental labor and facilities:

a. To provide access to Work to be tested/inspected

b. To facilitate tests/inspections

2. Notify Alliance Consulting Engineers, Inc. and laboratory twenty-four (24) hours prior to expected time for operations requiring testing/inspection services.

3. Employ services of an independent qualified testing laboratory and pay for additional samples, tests, and inspections required by Contractor beyond specified requirements.

4. Arrange with the Owner's agency and pay for additional samples, tests, and inspections required by Contractor beyond specified requirements.

D. Re-testing required because of non-conformance to specified requirements shall be performed by the same agency on instructions by Alliance Consulting Engineers, Inc.

E. Re-testing required because of non-conformance to specified requirements shall be paid for by Contractor.

F. Re-testing required because of non-conformance to specified requirements shall be performed by the same agency on instructions by Alliance Consulting Engineers, Inc. Payment for re testing will be charged to the Contractor by deducting testing charges from the Contract Price.

3.05 DEFECT ASSESSMENT

A. Replace Work or portions of the Work not conforming to specified requirements.

B. If, in the opinion of Alliance Consulting Engineers, Inc., it is not practical to remove and replace the Work, Alliance Consulting Engineers, Inc. will direct an appropriate remedy or adjust payment.

END OF SECTION

SECTION 01 41 26

PERMITS AND RIGHTS-OF-WAY

PART 1 GENERAL

1.01 DESCRIPTION

A. Work included: This section outlines the requirements of the Contractor for the payment for any fees and the acquisition of any required licenses, building permits, rights-of-ways, easements, etc., that may be required for the construction of the project.

B. Work not included: The Owner will obtain and provide to the Contractor, copies of the following, if required:(Edit As Required)

1. South Carolina Department of Health and Environmental Control, Permit to Construct.

2. South Carolina Department of Transportation Encroachment Permit

C. Related work: Documents affecting work of this section include, but are not necessarily limited to, General Conditions and Sections in Division 01 of these specifications.

1.02 SUBMITTALS

A. Submit to the Engineer and post at the site, satisfactory evidence that all required licenses, building permits, etc., have been obtained prior to start of construction.

PART 2 PRODUCTS - NOT USED

PART 3 EXECUTION

3.01 BUSINESS LICENSE

A. Verify licenses that are required to perform the work within the project area, and obtain at no additional cost to the Owner.

3.02 RIGHTS-OF-WAY, UTILITY LINES

A. The Contractor shall confine his activities to the project limits as illustrated in the Contract Documents.

B. The Owner will provide no right-of-way over other property.

3.03 LAND

A. The necessary land for construction of the proposed improvements will be provided by the Owner.

END OF SECTION

SECTION 01 42 19

REFERENCE STANDARDS

PART 1 GENERAL

1.01 DESCRIPTION

A. Throughout these Contract Documents, references are made to specifications and standards that have been issued by nationally recognized professional and/or trade organizations. These referenced standards are generally identified by abbreviating the name of the organization following with the specification/standard number, and unless specifically indicated otherwise, all references to standards refer to the latest edition available at the time of the bidding.

1.02 ABBREVIATIONS

A. Wherever the following abbreviations are used in these Contract Documents, these abbreviations are to be considered as the same as the respective expressions represented below:

1.	AASHO	American Association of State Highway Officials
2.	ACI	American Concrete Institute
3.	AISC	American Institute of Steel Construction
4.	ALS	American Lumber Standards
5.	ANSI	American National Standards Institute, Inc.
6.	ASTM	American Society for Testing and Materials
7.	AWWA	American Water Works Association
8.	AWPA	American Wood Preservers Association
9.	AWS	American Welding Society
10.	FSS	Federal Specifications and Standards, General Services Administration
11.	SPIB	Southern Pine Inspection Bureau
12.	SSPC	Steel Structures Painting Council

PART 2 PRODUCTS - NOT USED

PART 3 EXECUTION - NOT USED

END OF SECTION

SECTION 01 45 29

TESTING LABORATORY SERVICES

PART 1 GENERAL

1.01 SCOPE

A. This Section includes testing which the Owner may require, beyond that testing required of the manufacturer, to determine if materials provided for the Project meet the requirements of these Specifications.

B. This work also includes all testing required by the Owner to verify work performed by the Contractor is in accordance with the requirements of these Specifications, i.e., concrete strength and slump testing, soil compaction, etc.

C. This work does not include materials testing required in various sections of these Specifications to be performed by the manufacturer, e.g., testing of pipe.

1.02 SECTION INCLUDES

A. Selection of Testing Laboratory.

B. Laboratory Duties.

C. Payment for Testing Services.

D. Contractor Responsibilities.

E. Schedules for Testing.

F. Transporting Samples.

1.03 SELECTION OF TESTING LABORATORY

The testing laboratory or laboratories will be selected by the Contractor, subject to the approval of the Owner.

1.04 LABORATORY DUTIES

A. Cooperate with the Owner, Engineer and Contractor.

B. Provide qualified personnel promptly on notice.

C. Perform specified inspections, sampling and testing of materials.

1. Comply with specified standards, ASTM, other recognized authorities, and as specified.

2. Ascertain compliance with requirements of the Contract Documents.

D. Promptly notify the Engineer and Contractor of irregularity or deficiency of work which are observed during performance of services.

E. Promptly submit three copies (two copies to the Engineer and one copy to the Contractor) of report of inspections and tests in addition to those additional copies required by the Contractor with the following information included:

1. Date issued

2. Project title and number

3. Testing laboratory name and address

4. Name and signature of inspector

5. Date of inspection or sampling

6. Record of temperature and weather

7. Date of test

8. Identification of product and Specification section

9. Location of Project

10. Type of inspection or test

11. Results of test

12. Observations regarding compliance with the Contract Documents

F. Perform additional services as required.

G. The laboratory is not authorized to release, revoke, alter or enlarge on requirements of the Contract Documents, or approve or accept any portion of the Work.

1.05 PAYMENT FOR TESTING SERVICES

A. The cost of testing services required by the Contract shall be paid for by the Contractor and shall be included in the cost of the work to which it pertains. This excludes concrete, soil and asphalt testing, which will be paid for by the Owner.

B. The cost of additional testing services not specifically required in the Specifications, but requested by the Owner or Engineer, shall be paid for by the Owner.

C. The cost of material testing described in various sections of these Specifications or as required in referenced standards to be provided by a material manufacturer, shall be included in the price bid for that item and shall not be paid for by the Owner.

D. The cost of retesting any item that fails to meet the requirements of these Specifications shall be paid for by the Contractor.

1.06 CONTRACTOR RESPONSIBILITIES

A. Contractor will be furnished contact information for the selected laboratory. Contractor will be required to schedule ALL testing.

B. Cooperate with laboratory personnel, provide access to Work and/or manufacturer's requirements.

C. Provide to the laboratory, representative samples, in required quantities, of materials to be tested.

D. Furnish copies of mill test reports.

E. Furnish required labor and facilities to:

1. Provide access to Work to be tested;

2. Obtain and handle samples at the site (if certified to do so);

3. Facilitate inspections and tests;

4. Build or furnish a holding box for concrete cylinders or other samples as required by the laboratory.

F. Notify the laboratory sufficiently in advance of operation to allow for the assignment of personnel and schedules of tests.

G. Laboratory Tests: Where such inspection and testing are to be conducted by an independent laboratory agency, the sample(s) shall be selected by such laboratory or agency, or the Engineer, and shipped to the laboratory by the Contractor at Contractor's expense.

H. Copies of all correspondence between the Contractor and testing agencies shall be provided to the Engineer.

I. If the Contractor disagrees with the approved Engineer's testing agency's methods or results during an onsite test, the Contractor may have another testing agency conduct an independent evaluation at the Contractor's expense. After an independent evaluation is performed, the Contractor will submit their results to the Engineer for review.

1.07 SCHEDULES FOR TESTING

A. Establishing Schedule

1. The Contractor shall, by advance discussion with the testing laboratory, determine the time required for the laboratory to perform its tests and to issue each of its findings, and make all arrangements for the testing laboratory to be on site to provide the required testing.

2. Provide all required time within the construction schedule.

B. When changes of construction schedule are necessary during construction, coordinate all such changes of schedule with the testing laboratory as required.

C. When the testing laboratory is ready to test according to the determined schedule, but is prevented from testing or taking specimens due to incompleteness of the Work, all extra costs for testing attributable to the delay will be back-charged to the Contractor and shall not be borne by the Owner.

1.08 TRANSPORTING SAMPLES

The Contractor shall be responsible for transporting all samples, except those taken by testing laboratory personnel, to the testing laboratory.

PART 2 PRODUCTS - NOT USED

PART 3 EXECUTION - NOT USED

END OF SECTION

SECTION 01 60 00

PRODUCT REQUIREMENTS

PART 1 GENERAL

1.01 SECTION INCLUDES

A. General product requirements.

B. Re-use of existing products.

C. Transportation, handling, storage and protection.

D. Product option requirements.

E. Substitution limitations and procedures.

F. Maintenance materials, including extra materials, spare parts, tools, and software.

G. Protect products scheduled for use in the work by means including, but not necessarily limited to, those described in this Section.

1.02 RELATED REQUIREMENTS

A. Section 00 21 13 - Instructions to Bidders

B. Section 01 40 00 - Quality Requirements

C. Documents affecting work of this Section include, but are not necessarily limited to, Standard General Conditions of the Construction Contract and Sections in Division 01 of these specifications.

D. Additional procedures also may be prescribed in other Sections of these specifications.

1.03 SUBMITTALS

A. Proposed Products List: Submit list of major products proposed for use, with name of manufacturer, trade name, and model number of each product.

1. Submit within fifteen (15) days after date of Agreement.

2. For products specified only by reference standards, list applicable reference standards.

B. Product Data Submittals: Submit manufacturer's standard published data. Mark each copy to identify applicable products, models, options, and other data. Supplement manufacturers' standard data to provide information specific to this Project.

C. Shop Drawing Submittals: Prepared specifically for this Project; indicate utility and electrical characteristics, utility connection requirements, and location of utility outlets for service for functional equipment and appliances.

D. Sample Submittals: Illustrate functional and aesthetic characteristics of the product, with

integral parts and attachment devices. Coordinate sample submittals for interfacing work.

1. For selection from standard finishes, submit samples of the full range of the manufacturer's standard colors, textures, and patterns.

E. Indicate utility and electrical characteristics, utility connection requirements, and location of utility outlets for service for functional equipment and appliances.

1.04 QUALITY ASSURANCE

A. Include within the Contractor's quality assurance program such procedures as are required to assure full protection of work and materials.

1.05 MANUFACTURER'S RECOMMENDATIONS

A. Except as otherwise approved by the Engineer, determine and comply with manufacturer's recommendations on product handling, storage and protection.

PART 2 PRODUCTS

2.01 EXISTING PRODUCTS

A. Do not use materials and equipment removed from existing premises unless specifically required or permitted by the Contract Documents.

B. Unforeseen historic items encountered remain the property of the Owner; notify the Owner promptly upon discovery; protect, remove, handle, and store as directed by the Owner.

C. Existing materials and equipment indicated to be removed, but not to be re-used, relocated, reinstalled, delivered to the Owner, or otherwise indicated as to remain the property of the Owner, become the property of the Contractor; remove from site.

D. Reused Products: Reused products include materials and equipment previously used in this or other construction, salvaged and refurbished as specified.

2.02 NEW PRODUCTS

A. Provide new products unless specifically required or permitted by the Contract Documents.

2.03 PRODUCT OPTIONS

A. Products Specified by Reference Standards or by Description Only: Use any product meeting those standards or description.

B. Products Specified by Naming One or More Manufacturers: Use a product of one of the manufacturers named and meeting specifications, no options or substitutions allowed.

C. Products Specified by Naming One or More Manufacturers with a Provision for Substitutions: Submit a request for substitution for any manufacturer not named.

2.04 MAINTENANCE MATERIALS

A. Furnish extra materials, spare parts, tools, and software of types and in quantities specified in individual specification sections.

B. Deliver to Project site; obtain receipt prior to final payment.

PART 3 EXECUTION

3.01 SUBSTITUTION PROCEDURES

A. Instructions to Bidders specify time restrictions for submitting requests for substitutions during the bidding period. Comply with requirements specified in this section.

B. Alliance Consulting Engineers, Inc. will consider requests for substitutions only within fifteen (15) days after date of Agreement.

C. Document each request with complete data substantiating compliance of proposed substitution with Contract Document

D. A request for substitution constitutes a representation that the submitter:

1. Has investigated proposed product and determined that it meets or exceeds the quality level of the specified product.

2. Will provide the same warranty for the substitution as for the specified product.

3. Will coordinate installation and make changes to other Work that may be required for the Work to be complete with no additional cost to Owner.

4. Waives claims for additional costs or time extension that may subsequently become apparent.

5. Will reimburse the Owner and Alliance Consulting Engineers, Inc. for review or redesign services associated with re-approval by authorities.

E. Substitution Submittal Procedure:

1. Submit three (3) copies of request for substitution for consideration. Limit each request to one proposed substitution.

2. Submit shop drawings, product data, and certified test results attesting to the proposed product equivalence. Burden of proof is on proposer.

3. Alliance Consulting Engineers, Inc. will notify Contractor in writing of decision to accept or reject request.

3.02 PACKAGING

A. Deliver products to the job site in their manufacturer's original container, with labels intact and legible.

1. Maintain packaged materials with seals unbroken and labels intact until time of use.

2. Promptly remove damaged material and unsuitable items from the job site and promptly replace with material meeting the specified requirements, at no additional cost to the Owner.

B. The Engineer may reject as non-complying such material and products that do not bear

identification satisfactory to the Engineer as to manufacturer, grade, quality and other pertinent information.

3.03 TRANSPORTATION AND HANDLING

A. Coordinate schedule of product delivery to designated prepared areas in order to minimize site storage time and potential damage to stored materials.

B. Transport and handle products in accordance with manufacturer's instructions.

C. Transport materials in covered trucks to prevent contamination of product and littering of surrounding areas.

D. Promptly inspect shipments to ensure that products comply with requirements, quantities are correct, and products are undamaged.

E. Provide equipment and personnel to handle products by methods to prevent soiling, disfigurement, or damage.

F. Arrange for the return of packing materials, such as wood pallets, where economically feasible.

3.04 STORAGE AND PROTECTION

A. Designate receiving/storage areas for incoming products so that they are delivered according to installation schedule and placed convenient to work area in order to minimize waste due to excessive materials handling and misapplication.

B. Store and protect products in accordance with manufacturers' instructions.

C. Store with seals and labels intact and legible.

D. Store sensitive products in weather tight, climate controlled, enclosures in an environment favorable to product.

E. For exterior storage of fabricated products, place on sloped supports above ground.

F. Cover products subject to deterioration with impervious sheet covering. Provide ventilation to prevent condensation and degradation of products.

G. Store loose granular materials on solid flat surfaces in a well-drained area. Prevent mixing with foreign matter.

H. Prevent contact with material that may cause corrosion, discoloration, or staining.

I. Provide equipment and personnel to store products by methods to prevent soiling, disfigurement, or damage.

J. Arrange storage of products to permit access for inspection. Periodically inspect to verify products are undamaged and are maintained in acceptable condition.

K. Partial payments under the Contract will not relieve the Contractor from responsibility.

1. When materials and work at the site that have been partially paid for are not adequately protected by the Contractor, such materials will be protected by the Owner at the expense of the Contractor and no further partial payment thereon

will be made.

L. Maintain finished surfaces clean, unmarred, and suitably protected until accepted by the Owner.

3.05 REPAIRS AND REPLACEMENTS

A. In the event of damage, promptly make replacements and repairs to the approval of the Engineer and at no additional cost to the Owner.

B. Additional time required to secure replacements and to make repairs will not be considered by the Engineer to justify an extension in the contract time of completion.

END OF SECTION

SECTION 01 70 00

EXECUTION REQUIREMENTS

PART 1 GENERAL

1.01 SECTION INCLUDES

A. Examination, preparation, and general installation procedures.

B. Requirements for alterations work, including selective demolition.

C. Pre-installation meetings.

D. Cutting and patching.

E. Surveying for laying out the work.

F. Cleaning and protection.

G. Starting of systems and equipment.

H. Demonstration and instruction of the Owner's personnel.

I. Project Record Documents.

J. Contract Closeout procedures, except payment procedures.

1.02 RELATED REQUIREMENTS

A. Documents affecting work of this Section include, but are not necessarily limited to, General Conditions, and Sections in Division 01 of these Specifications.

B. Other requirements for technical services are stated in other sections of these Specifications.

C. Section 00 65 19.13 - Contractor's Affidavit.

D. Section 01 30 00 - Administrative Requirements

E. Section 01 40 00 - Quality Requirements

F. Section 01 78 00 - Closeout Submittals

1.03 SUBMITTALS

A. See Section 01 30 00 - Administrative Requirements, for submittal procedures.

B. Survey work: Submit name, address, and telephone number of Surveyor before starting survey work.

1. On request, submit documentation verifying accuracy of survey work.

2. Submit a copy of site drawing signed by the Land Surveyor, with elevations and locations of the work in conformance with Contract Documents.

3. Submit surveys and survey logs for the project record.

C. Cutting and Patching: Submit written request in advance of cutting or alteration that affects:

1. Structural integrity of any element of Project.

2. Integrity of weather exposed or moisture resistant element.

3. Efficiency, maintenance, or safety of any operational element.

4. Visual qualities of sight exposed elements.

5. Work of the Owner or separate Contractor.

1.04 QUALIFICATIONS

A. For survey work, employ a land surveyor registered in South Carolina. Submit an evidence of Surveyor's Errors and Omissions insurance coverage in the form of an Insurance Certificate.

1.05 PROJECT CONDITIONS

A. Protect site from puddling or running water. Provide water barriers as required to protect site from soil erosion.

B. Ventilate enclosed areas to assist cure of materials, to dissipate humidity, and to prevent accumulation of dust, fumes, vapors, or gases.

C. Dust Control: Execute work by methods to minimize raising dust from construction operations.

D. Provide positive means to prevent air-borne dust from dispersing into atmosphere and over adjacent property.

E. Erosion and Sediment Control: Plan and execute work by methods to control surface drainage from cuts and fills, from borrow and waste disposal areas. Prevent erosion and sedimentation.

1. Minimize amount of bare soil exposed at one time.

2. Provide temporary measures such as berms, dikes, and drains, to prevent water flow.

3. Construct fill and waste areas by selective placement to avoid erosive surface silts or clays.

4. Periodically inspect earthwork to detect evidence of erosion and sedimentation; promptly apply corrective measures.

F. Noise Control: Provide methods, means, and facilities to minimize noise produced by construction operations.

G. Pollution Control: Provide methods, means, and facilities to prevent contamination of soil, water, and atmosphere from discharge of noxious, toxic substances, and pollutants produced by construction operations. Comply with federal, state, and local regulations.

1.06 COORDINATION

A. Coordinate scheduling, submittals, and work of the various sections of the Project Manual to ensure efficient and orderly sequence of installation of interdependent construction elements, with provisions for accommodating items installed later.

B. Notify affected utility companies and comply with their requirements.

C. Verify that utility requirements and characteristics of new operating equipment are compatible with building utilities. Coordinate work of various sections having interdependent responsibilities for installing, connecting to, and placing in service, such equipment.

D. Coordinate space requirements, supports, and installation of mechanical and electrical work that are indicated diagrammatically on Drawings. Follow routing shown for pipes, ducts, and conduit, as closely as practicable; place runs parallel with lines of building. Utilize spaces efficiently to maximize accessibility for other installations, for maintenance, and for repairs.

E. In finished areas except as otherwise indicated, conceal pipes, ducts, and wiring within the construction. Coordinate locations of fixtures and outlets with finish elements.

F. Coordinate completion and clean-up of work of separate sections.

G. After the Owner's occupancy of premises, coordinate access to site for correction of defective work and work not in accordance with Contract Documents, to minimize disruption of the Owner's activities.

PART 2 PRODUCTS

2.01 PATCHING MATERIALS

A. New Materials: As specified in product sections; match existing products and work for patching and extending work.

B. Type and Quality of Existing Products: Determine by inspecting and testing products where necessary, referring to existing work as a standard.

C. Product Substitution: For any proposed change in materials, submit request for substitution described in Section 01 60 00 Product Requirements.

PART 3 EXECUTION

3.01 EXAMINATION

A. Verify that existing site conditions and substrate surfaces are acceptable for subsequent work.

B. Start of work means acceptance of existing conditions.

C. Verify that existing substrate is capable of structural support or attachment of new work being applied or attached.

D. Examine and verify specific conditions described in individual specification sections.

E. Take field measurements before confirming product orders or beginning fabrication, to

minimize waste due to over-ordering or misfabrication.

F. Verify that utility services are available, of the correct characteristics, and in the correct locations.

G. Prior to Cutting: Examine existing conditions prior to commencing work, including elements subject to damage or movement during cutting and patching. After uncovering existing work, assess conditions affecting performance of work. Beginning of cutting or patching means acceptance of existing conditions.

3.02 PREPARATION

A. Clean substrate surfaces prior to applying next material or substance.

B. Seal cracks or openings of substrate prior to applying next material or substance.

C. Apply manufacturer required or recommended substrate primer, sealer, or conditioner prior to applying any new material or substance in contact or bond.

3.03 PREINSTALLATION MEETINGS

A. When required in individual specification sections, convene a preinstallation meeting at the site prior to commencing work of the section.

B. Require attendance of parties directly affecting, or affected by, work of the specific section.

C. Notify Alliance Consulting Engineers, Inc. four (4) days in advance of meeting date.

D. Prepare agenda and preside at meeting:

1. Review conditions of examination, preparation and installation procedures.

2. Review coordination with related work.

E. Record minutes and distribute copies within two (2) days after meeting to participants, with two (2) copies to Alliance Consulting Engineers, Inc., Owners, participants, and those affected by decisions made.

3.04 LAYING OUT THE WORK

A. Verify locations of survey control points prior to starting work.

B. Promptly notify Alliance Consulting Engineers, Inc. of any discrepancies discovered.

C. Protect survey control points prior to starting site work; preserve permanent reference points during construction.

D. Promptly report to Alliance Consulting Engineers, Inc. the loss or destruction of any reference point or relocation required because of changes in grades or other reasons.

E. Replace dislocated survey control points based on original survey control. Make no changes without prior written notice to Alliance Consulting Engineers, Inc.

F. Utilize recognized engineering survey practices.

G. Establish a minimum of two (2) permanent bench marks on site, referenced to established control points. Record locations, with horizontal and vertical data, on project record documents.

H. Establish elevations, lines and levels. Locate and lay out by instrumentation and similar appropriate means:

1. Site improvements including pavements; stakes for grading, fill and topsoil placement; utility locations, slopes, and invert elevations.

2. Grid or axis for structures.

I. Periodically verify layouts by same means.

J. Maintain a complete and accurate log of control and survey work as it progresses.

3.05 GENERAL INSTALLATION REQUIREMENTS

A. Install products as specified in individual sections, in accordance with manufacturer's instructions and recommendations, and so as to avoid waste due to necessity for replacement.

B. Make vertical elements plumb and horizontal elements level, unless otherwise indicated.

C. Install equipment and fittings plumb and level, neatly aligned with adjacent vertical and horizontal lines, unless otherwise indicated.

D. Make consistent texture on surfaces, with seamless transitions, unless otherwise indicated.

E. Make neat transitions between different surfaces, maintaining texture and appearance.

3.06 ALTERATIONS

A. Drawings showing existing construction and utilities are based on casual field observation and existing record documents only.

1. Verify that construction and utility arrangements are as shown.

2. Report discrepancies to Alliance Consulting Engineers, Inc. before disturbing existing installation.

3. Beginning of alterations work constitutes acceptance of existing conditions.

B. Remove existing work as indicated and as required to accomplish new work.

1. Remove items indicated on drawings or described in the Technical Specifications.

2. Relocate items indicated on drawings or described in the Technical Specifications.

C. Services (Including but not limited to Fire Protection, Electrical and Telecommunications): Remove, relocate and extend existing systems to accommodate new construction.

1. Maintain existing active systems that are to remain in operation; maintain access to equipment and operational components; if necessary, modify installation to allow access or provide access panel.

2. Where existing systems or equipment are not active and Contract Documents require reactivation, put back into operational condition; repair supply, distribution, and equipment as required.

3. Where existing active systems serve occupied facilities but are to be replaced with new services, maintain existing systems in service until new systems are complete and ready for service.

a. Disable existing systems only to make switchovers and connections; minimize duration of outages.

b. Provide temporary connections as required to maintain existing systems in service.

4. Verify that abandoned services serve only abandoned facilities.

D. Protect existing work to remain.

1. Prevent movement of structure; provide shoring and bracing if necessary.

2. Perform cutting to accomplish removals neatly and as specified for cutting new work.

3. Repair adjacent construction and finishes damaged during removal work.

4. Patch as specified for patching new work.

E. Adapt existing work to fit new work: Make as neat and smooth transition as possible.

1. When existing finished surfaces are cut so that a smooth transition with new work is not possible, terminate existing surface along a straight line at a natural line of division and make recommendation to Alliance Consulting Engineers, Inc.

F. Patching: Where the existing surface is not indicated to be refinished, patch to match the surface finish that existed prior to cutting. Where the surface is indicated to be refinished, patch so that the substrate is ready for the new finish.

G. Clean existing systems and equipment.

H. Remove demolition debris and abandoned items from alterations areas and dispose of off-site; do not burn or bury.

I. Do not begin new construction in alterations areas before demolition is complete.

J. Comply with all other applicable requirements of this section.

3.07 CUTTING AND PATCHING

A. Whenever possible, execute the work by methods that avoid cutting or patching.

B. See Alterations article above for additional requirements.

1. Complete the work.

2. Fit products together to integrate with other work.

3. Provide openings for penetration of mechanical, electrical and other services.

4. Match work that has been cut to adjacent work.

5. Repair areas adjacent to cuts to required condition.

6. Repair new work damaged by subsequent work.

7. Remove samples of installed work for testing when requested.

8. Remove and replace defective and non-conforming work.

C. Execute cutting and patching including excavation and fill to complete the work, to uncover work in order to install improperly sequenced work, to remove and replace defective or non-conforming work, to remove samples of installed work for testing when requested, to provide openings in the work for penetration of mechanical and electrical work, to execute patching to complement adjacent work, and to fit products together to integrate with other work.

D. Execute work by methods that avoid damage to other work and that will provide appropriate surfaces to receive patching and finishing. In existing work, minimize damage and restore to original condition.

E. Employ original installer to perform cutting for weather exposed and moisture resistant elements, and sight exposed surfaces.

F. Cut rigid materials using masonry saw or core drill. Pneumatic tools not allowed without prior approval.

G. Restore work with new products in accordance with requirements of Contract Documents.

H. Fit work air tight to pipes, sleeves, ducts, conduit, and other penetrations through surfaces.

I. Patching:

1. Finish patched surfaces to match finish that existed prior to patching. On continuous surfaces, refinish to nearest intersection or natural break. For an assembly, refinish entire unit.

2. Match color, texture, and appearance.

3. Repair patched surfaces that are damaged, lifted, discolored, or showing other imperfections due to patching work. If defects are due to condition of substrate, repair substrate prior to repairing finish.

J. Refinish surfaces to match adjacent finish. For continuous surfaces, refinish to nearest intersection or natural break. For an assembly, refinish entire unit.

K. Make neat transitions. Patch work to match adjacent work in texture and appearance. Where new work abuts or aligns with existing, perform a smooth and even transition.

L. Patch or replace surfaces that are damaged, lifted, discolored, or showing other imperfections due to patching work. Repair substrate prior to patching finish. Finish patches to produce uniform finish and texture over entire area. When finish cannot be matched, refinish entire surface to nearest intersections.

3.08 PROGRESS CLEANING

A. Maintain areas free of waste materials, debris, and rubbish. Maintain site in a clean and orderly condition.

B. Collect and remove waste materials, debris, and trash/rubbish from site periodically and dispose off-site; do not burn or bury.

3.09 PROTECTION OF INSTALLED WORK

A. Protect installed work from damage by construction operations.

B. Provide special protection where specified in individual specification sections.

C. Provide temporary and removable protection for installed products. Control activity in immediate work area to prevent damage.

D. Remove protective coverings when no longer needed; reuse or recycle plastic coverings if possible.

3.10 SYSTEM STARTUP

A. Coordinate schedule for start-up of various equipment and systems.

B. Verify that each piece of equipment or system has been checked for proper lubrication, drive rotation, belt tension, control sequence, and for conditions that may cause damage.

C. Verify tests, meter readings, and specified electrical characteristics agree with those required by the equipment or system manufacturer.

D. Verify that wiring and support components for equipment are complete and tested.

E. Execute start-up under supervision of applicable Contractor personnel and manufacturer's representative in accordance with manufacturers' instructions.

F. Submit a written report that equipment or system has been properly installed and is functioning correctly.

3.11 DEMONSTRATION AND INSTRUCTION

A. Demonstrate start-up, operation, control, adjustment, trouble-shooting, servicing, maintenance, and shutdown of each item of equipment at scheduled time, at equipment location.

B. For equipment or systems requiring seasonal operation, perform demonstration for other season within six months.

C. Provide a qualified person who is knowledgeable about the Project to perform demonstration and instruction of owner personnel.

3.12 ADJUSTING

A. Adjust operating products and equipment to ensure smooth and unhindered operation.

3.13 FINAL CLEANING

A. Execute final cleaning prior to final project assessment.

B. Use cleaning materials that are nonhazardous.

C. Clean site; sweep paved areas, rake clean landscaped surfaces.

D. Remove waste, surplus materials, trash/rubbish, and construction facilities from the site; dispose of in legal manner; do not burn or bury.

3.14 PROJECT RECORD DOCUMENTS

A. Work includes:

1. Throughout progress of the Work, maintain an accurate record of changes in the Contract Documents, as described in Article 3.1 below.

2. Upon completion of the Work, deliver the recorded changes to the Engineer.

B. Related work:

1. Documents affecting work of this Section include, but are not necessarily limited to, General Conditions, and Sections in Division 01 of these specifications.

2. Other requirements affecting Project Record Documents may appear in pertinent other Sections of these specifications.

C. Quality assurance:

1. Delegate the responsibility for maintenance of Record Documents to one person on the Contractor's staff as approved by the Engineer.

2. Accuracy of records shall be such that future search for items shown on the Project Record Documents may rely reasonably on the information provided under this Section of the Work.

D. Submittals:

1. The Engineer's approval of the current status of Project Record Documents may be a prerequisite to the Engineer's approval of requests for progress payment and request for final payment under the Contract.

2. Prior to submitting each request for progress payment, secure the Engineer's approval of the current status of the Project Record Documents.

3. Prior to submitting request for final payment, submit the final Project Record Documents to the Engineer and secure his approval.

E. Product handling:

1. Maintain Record Documents completely protected from deterioration and from loss and damage until completion of the Work and transfer to the Engineer.

2. In the event of loss of recorded data, use means necessary to again secure the data to the Engineer's approval.

a. Such means shall include, if necessary in the opinion of the Engineer, removal and replacement of concealing materials.

b. In such case, provide replacements to the standards originally required by the Contract Documents.

F. Job Set Documents:

1. Promptly following receipt of the Owner's Notice to Proceed, secure from the Engineer, at no charge to the Contractor, one complete set of all Documents comprising the Contract.

G. Maintenance of Job Set:

1. Immediately upon receipt of the job set described in above paragraph titled “JOB SET DOCUMENTS”, identify each of the Documents with the title, "RECORD DOCUMENTS - JOB SET".

2. Preservation:

a. Considering the Contract completion time, the probable number of occasions upon which the job set must be taken out for new entries and for examination, and the conditions under which these activities will be performed, devise a suitable method for protecting the job set to the approval of the Engineer.

b. Do not use the job set for any purpose except entry of new data and for review by the Engineer.

c. Maintain the job set at the site of Work as that site is designated by the Engineer.

3. Making entries on Job Set Drawings:

a. Use erasable colored pencil, preferably red (not ink or indelible pencil) to delineate changes.

b. Show by station number location of all fittings, manholes, valves, wye locations, etc.

c. Reference all fittings and valves to two aboveground items reasonably safe from being relocated and indicate such references on the drawings.

d. Show location of electrical conduit, pull boxes, etc.

4. Submittal:

a. Submit "marked-up" set of drawings to the Engineer.

i. Make any necessary additions as required by the Engineer.

3.15 CLOSEOUT PROCEDURES

A. Work included shall be providing compliance with the requirements of the General Conditions of these Specifications for administrative procedures in closing out the project work.

B. Make submittals that are required by governing or other authorities.

1. Provide copies to Alliance Consulting Engineers, Inc.

2. When the Engineer finds the Contractor's work acceptable, the Contractor shall be given such notice and should proceed with closeout submittals.

3. Closeout submittals shall contain at least the following:

a. Project record documents.

b. Equipment operation and maintenance manuals and copies of start-up reports.

c. Warranties and bonds.

d. Spare parts and manuals.

e. Evidence of payment and release to liens per General Conditions.

f. Section 00 65 19.13 - Contractor's Affidavit.

C. Notify Alliance Consulting Engineers, Inc. when work is considered ready for Substantial Completion.

1. The Contractor shall notify the Engineer that, in his opinion, the project is substantially complete. A written statement listing items complete shall be submitted.

2. Upon receipt of the Contractor's notice, the Engineer shall make an observation to determine if substantial completion is provided.

3. If, in the Engineer's opinion, the project is not substantially complete, a written notice to the Contractor shall follow outlining reasons and deficiencies in work that comprised the Engineer's decision. The Engineer's decision shall be final.

D. Request and obtain permit acceptance on all open construction permits.

E. Submit written certification that Contract Documents have been reviewed, work has been inspected, and that work is complete in accordance with Contract Documents and ready for Alliance Consulting Engineers, Inc.'s review.

F. Correct items of work listed in executed Certificates of Substantial Completion

and comply with requirements for access to Owners-occupied areas.

G. Accompany Engineer & Owner on preliminary final observation.

1. The Engineer will make a final observation for the Contractor after all items noted in the substantial completion observation have been corrected. The Contractor shall notify the Engineer in writing when a final observation is needed. Incomplete and/or defective work shall be given to the Contractor by written notice.

H. Notify Alliance Consulting Engineers, Inc. when work is considered finally complete.

I. Complete items of work determined by Alliance Consulting Engineers, Inc.'s final observation.

J. Re-observation:

1. Re-observation required due to failure by the Contractor to make previously noted corrections will be performed by the Engineer.

2. Cost for such observations will be due to and payable by the Contractor at a rate equal to charges to the Owner for similar work.

3. Re-observations will continue until the work is acceptable to the Engineer.

K. Final Payment:

1. Final payment to the Contractor will be made upon completion of the previous items and others required by these specifications. A final statement shall be forwarded to the Engineer. The statement shall address:

a. Previous change orders.

b. Unit prices.

c. Deductions for un-corrected work.

d. Deductions for liquidated damages.

e. Deductions for re-testing work.

f. Deductions for re-observation.

g. Deductions for shop drawing review.

h. Adjusted contract sum.

i. Previous payments.

j. Amount due.

2. When required, the Engineer will prepare a contract change order for adjustments not previously made.

END OF SECTION

SECTION 01 71 23

FIELD ENGINEERING

PART 1 GENERAL

1.01 DESCRIPTION

A. Work included: Provide such field engineering services as are required for proper completion of the Work.

1.02 Related work:

A. Documents affecting work of this Section include, but are not necessarily limited to, General Conditions and Sections in Division 01 of these Specifications.

1.03 QUALITY ASSURANCE

A. Provide competent labor, supervision, inspection services, testing services, materials and equipment for a complete and quality rehabilitation and coating project.

B. Exercise proper precautions to verify the information described in the Technical Specifications and Contract Documents prior to laying out or performing any part of the Work.

1. The Contractor will be held responsible for any errors therein that otherwise might have been avoided.

2. Promptly inform the Engineer of any errors or discrepancies discovered in the Technical Specifications in order that proper corrections may be made.

1.04 PROCEDURES

A. Verify lead content of existing coating system before starting work on the site.

B. Secure all required permits and make all required and necessary notifications before starting work on the site.

C. Perform preparation, coating and repair task during progress of the Work consistent with the spirit of the Technical Specifications.

D. Do not deviate from or change items of the Work without specific approval from the Engineer.

E. Promptly advise the Engineer when a change becomes necessary because of other changes in the Work.

PART 2 PRODUCTS – NOT USED

PART 3 EXECUTION – NOT USED

END OF SECTION

SECTION 01 74 19

WASTE MANAGEMENT

PART 1 GENERAL

1.01 WASTE MANAGEMENT REQUIREMENTS

A. The Owner requires that this Project generate the least amount of trash and waste possible.

B. Employ processes that ensure the generation of as little waste as possible due to error, poor planning, breakage, mishandling, contamination, or other factors.

C. Minimize trash/waste disposal in landfills; reuse, salvage, or recycle as much waste as economically feasible.

D. Methods of trash/waste disposal that are not acceptable are:

1. Burning on the project site.

2. Burying on the project site.

3. Other illegal dumping or burying.

E. Regulatory Requirements: Contractor is responsible for knowing and complying with regulatory requirements, including but not limited to Federal, state and local requirements, pertaining to legal disposal of all construction and demolition waste materials.

1.02 DEFINITIONS

A. Clean: Untreated and unpainted; not contaminated with oils, solvents, caulk, or the like.

B. Construction and Demolition Waste: Solid wastes typically including building materials, packaging, trash, debris, and rubble resulting from construction, remodeling, repair and demolition operations.

C. Hazardous: Exhibiting the characteristics of hazardous substances, i.e., ignitibility, corrosivity, toxicity or reactivity.

D. Nonhazardous: Exhibiting none of the characteristics of hazardous substances, i.e., ignitibility, corrosivity, toxicity, or reactivity.

E. Nontoxic: Neither immediately poisonous to humans nor poisonous after a long period of exposure.

F. Recyclable: The ability of a product or material to be recovered at the end of its life cycle and remanufactured into a new product for reuse by others.

G. Recycle: To remove a waste material from the project site to another site for remanufacture into a new product for reuse by others.

H. Recycling: The process of sorting, cleansing, treating and reconstituting solid waste and other discarded materials for the purpose of using the altered form. Recycling does not include burning, incinerating, or thermally destroying waste.

I. Return: To give back reusable items or unused products to vendors for credit.

J. Reuse: To reuse a construction waste material in some manner on the project site.

K. Salvage: To remove a waste material from the project site to another site for resale or reuse by others.

L. Sediment: Soil and other debris that has been eroded and transported by storm or well production run-off water.

M. Source Separation: The act of keeping different types of waste materials separate beginning from the first time they become waste.

N. Toxic: Poisonous to humans either immediately or after a long period of exposure.

O. Trash: Any product or material unable to be reused, returned, recycled, or salvaged.

P. Waste: Extra material or material that has reached the end of its useful life in its intended use. Waste includes salvageable, returnable, recyclable, and reusable material.

1.03 SUBMITTALS

A. See Section 01 30 00 - Administrative Requirements, for submittal procedures.

PART 2 PRODUCTS

2.01 No products are required under this Section.

A. See Section 01 60 00 - Product Requirements for substitution submission procedures.

B. For each proposed product substitution, submit the following information in addition to requirements specified in Section 01 60 00 Product Requirements:

1. Relative amount of waste produced, compared to specified product.

2. Cost savings on waste disposal, compared to specified product, to be deducted from the Contract Sum.

3. Proposed disposal method for waste product.

4. Markets for recycled waste product.

PART 3 EXECUTION

3.01 WASTE MANAGEMENT PROCEDURES

A. See Section 01 30 00 Administrative Requirements for additional requirements for project meetings, reports, submittal procedures and project documentation.

B. See Section 01 60 00 Product Requirements for waste prevention requirements related to delivery, storage and handling.

C. See Section 01 70 00 Execution Requirements for trash/waste prevention procedures related to demolition, cutting and patching, installation, protection and cleaning.

3.02 WASTE MANAGEMENT PLAN IMPLEMENTATION

A. Instruction: Provide on-site instruction of appropriate separation, handling, and recycling, salvage, reuse and return methods to be used by all parties at the appropriate stages of the project.

B. Meetings: Discuss trash/waste management goals and issues at project meetings.

1. Pre-bid meeting.

2. Pre-construction meeting.

3. Regular job-site meetings.

C. Reuse of Materials On-Site: Set aside, sort and protect separated products in preparation for reuse.

D. Salvage: Set aside, sort and protect products to be salvaged for reuse off-site.

END OF SECTION

SECTION 01 78 00

CLOSEOUT SUBMITTALS

PART 1 GENERAL

1.01 SECTION INCLUDES

A. Project Record Documents.

B. Operation and Maintenance Data.

C. Warranties and Bonds.

1.02 RELATED REQUIREMENTS

A. Section 00 70 00 – Standard General Conditions of the Construction Contract

B. Section 01 30 00 - Administrative Requirements

C. Section 01 70 00 - Execution Requirements

D. Individual Product Sections: Specific requirements for operation and maintenance data.

E. Individual Product Sections: Warranties required for specific products or Work.

1.03 SUBMITTALS

A. Project Record Documents: Contractor to keep Record Documents on site at all times for review by Engineer or Owner. Submit documents to Alliance Consulting Engineers, Inc. with claim for final Application for Payment.

B. Operation and Maintenance Data:

1. Submit two copies of preliminary draft or proposed formats and outlines of contents before start of Work. Alliance Consulting Engineers, Inc. will review draft and return one copy with comments.

2. For equipment, or component parts of equipment put into service during construction and operated by the Owners, submit completed documents within ten days after acceptance.

3. Submit one copy of completed documents 15 days prior to final inspection. This copy will be reviewed and returned after final inspection, with Alliance Consulting Engineers, Inc. comments. Revise content of all document sets as required prior to final submission.

4. Submit two sets of revised final documents in final form within 10 days after final inspection.

C. Warranties and Bonds:

1. For equipment or component parts of equipment put into service during construction with the Owners permission, submit documents within 10 days after acceptance.

2. Make other submittals within 10 days after Date of Substantial Completion, prior to final Application for Payment.

3. For items of Work for which acceptance is delayed beyond Date of Substantial Completion, submit within 10 days after acceptance, listing the date of acceptance as the beginning of the warranty period.

PART 2 PRODUCTS - NOT USED

PART 3 EXECUTION

3.01 PROJECT RECORD DOCUMENTS

A. Maintain on site one set of the following record documents; record actual revisions to the Work:

1. Drawings.

2. Addenda.

3. Change Orders and other modifications to the Contract.

B. Ensure entries are complete and accurate, enabling future reference by the Owner.

C. Store record documents separate from documents used for construction.

D. Record information concurrent with construction progress.

E. Record Drawings: Legibly mark each item to record actual construction including:

1. Field changes of dimension and detail.

2. Details not on original Contract drawings.

3.02 OPERATION AND MAINTENANCE DATA

A. For Each Product or System: List names, addresses and telephone numbers of Subcontractors and suppliers, including local source of supplies and replacement parts.

B. Product Data: Mark each sheet to clearly identify specific products and component parts, and data applicable to installation. Delete inapplicable information.

C. Drawings: Supplement product data to illustrate relations of component parts of equipment and systems, to show control and flow diagrams. Do not use Project Record Documents as maintenance drawings.

D. Typed Text: As required to supplement product data. Provide logical sequence of instructions for each procedure, incorporating manufacturer's instructions.

3.03 OPERATION AND MAINTENANCE MANUALS

A. Prepare instructions and data by personnel experienced in maintenance and operation of described products.

B. Prepare data in the form of an instructional manual.

3.04 WARRANTIES AND BONDS

A. Obtain warranties and bonds, executed in duplicate by responsible Subcontractors, suppliers, and manufacturers, within 10 days after completion of the applicable item of work. Except for items put into use with The Owners permission, leave date of beginning of time of warranty until the Date of Substantial completion is determined.

B. Verify that documents are in proper form, contain full information, and are notarized.

C. Co-execute submittals when required.

D. Retain warranties and bonds until time specified for submittal.

END OF SECTION

SECTION 02 30 00

SUBSURFACE EVALUATION

PART 1 GENERAL

1.01 DESCRIPTION

A. Subsurface Evaluation Report:

1. Report of Geotechnical Exploration – Prepared for the Project by Intertek-PSI dated June 28, 2019 (Intertek-PSI Report No.: 04511011)

   a. A copy of the report is included in this Section 02 30 00.

B. Use of data:

1. These reports were obtained only for the Engineer's use in design and is not a part of the Contract Documents.

2. The report is available for bidders' information, but is not a warranty of subsurface conditions.

3. It is the responsibility of the Bidders to visit the site and acquaint themselves with the existing conditions.

4. Prior to bidding, bidders may make their own Subsurface Investigations to satisfy themselves as to site and subsurface soil conditions, but these investigations must be performed under the time schedules and arrangements that have been approved in advance by the Engineer.

1.02 QUALITY ASSURANCE

A. Owner will engage a qualified independent testing and inspecting agency to perform field tests and inspections and prepare test reports in accordance with the schedule of special inspections, as specified in Section 01 40 00.

B. All work that is performed under this contract that does not meet technical or design requirements must be adjusted and no deviation from the Contract Documents can be made without specific and written approval from the Engineer.

PART 2 PRODUCTS - NOT USED

PART 3 EXECUTION - NOT USED

END OF SECTION

Intertek - PSI
534 Saint Andrews Road, Suite C
Columbia, South Carolina 29210
Phone: (803) 776-6050
Fax: (803) 772-2803

June 28, 2019

Alliance Consulting Engineers, Inc.
P.O. Box 8147
Columbia, South Carolina 29202

Attention: Mr. Ryan T. Ohmer, P.E.
Email: rohmer@alliancece.com

Subject: **Report of Geotechnical Engineering Services**
Project Lego – Roadway Improvements
Lancaster County, South Carolina
PSI Report No.: 04511011

Dear Mr. Ohmer:

Professional Service Industries (PSI), an Intertek company, is pleased to transmit our Geotechnical Engineering Services Report for the proposed Project Lego Roadway Improvements Project located at the intersection of MacMillan Park Drive and Highway 160 in Fort Mill, South Carolina. This report includes the results of field and laboratory testing, and recommendations pavement design, as well as general site development.

PSI appreciates the opportunity to perform this Geotechnical Study and look forward to continued participation during the design and construction phases of this project. If you have any questions pertaining to this report, or if PSI may be of further service, please contact our office at 803-776-6050.

PSI also has great interest in providing materials testing and inspection services during the construction of this project. If you will advise us of the appropriate time to discuss these engineering services, we will be pleased to meet with you at your convenience.

Very truly yours,
PROFESSIONAL SERVICE INDUSTRIES, INC.

Madison P. Devine, EIT
Staff Engineer

John Gordon
Principal Consultant

James P. Slusher, Jr., PE
Director, Southeast U.S.

SOUTH CAROLINA
LICENSED PROFESSIONAL ENGINEER
No 29793
6-28-19
JAMES P. SLUSHER, JR.

TABLE OF CONTENTS

1 PROJECT INFORMATION 1
1.1 PROPOSAL AND PROJECT AUTHORIZATION 1
1.2 PROJECT DESCRIPTION 1
1.3 PURPOSE AND SCOPE OF WORK 1
2 EXPLORATION PROCEDURES 2
2.1 FIELD SERVICES 2
2.2 LABORATORY TESTING 3
3 SITE AND SUBSURFACE CONDITIONS 3
3.1 SITE DESCRIPTION 3
3.2 SITE GEOLOGY 3
3.3 SUBSURFACE CONDITIONS 4
4 GEOTECHNICAL EVALUATION AND RECOMMENDATIONS 5
4.1 GEOTECHNICAL ASSESSMENT 5
4.2 SITE PREPARATION AND EARTHWORK 6
4.3 PAVEMENT DESIGN GUIDELINES AND PARAMETERS 8
5 CONSTRUCTION CONSIDERATIONS 9
5.1 GROUNDWATER 9
5.2 EXCAVATION AND SAFETY 9
6 REPORT LIMITATIONS 10

APPENDIX
Approximate Boring Location Plan
General Notes and Soil Classification Chart
Boring Logs

1 PROJECT INFORMATION

1.1 PROPOSAL AND PROJECT AUTHORIZATION

This report presents our findings and recommendations of a geotechnical exploration and assessment performed by Professional Service Industries (PSI) for the proposed Project Lego Roadway Improvements Project located at the intersection of MacMillan Park Drive and Highway 160 in Fort Mill, South Carolina These services were performed in accordance with PSI Proposal No. 0451-273140 dated March 26, 2019. Authorization to proceed was given to PSI by Mr. Ryan Ohmer of Alliance Consulting Engineers (ACE) on May 22, 2019.

1.2 PROJECT DESCRIPTION

Project information was provided to PSI through an e-mailed Request For Proposal (RFP) from Mr. Ryan Ohmer of Alliance Consulting Engineers (Alliance) on March 19, 2019. The RFP included a drawing titled “Phase I Roadway Improvements”, prepared by Alliance and dated November 14, 2018. This drawing consists of an aerial photo that presents the proposed construction area along MacMillan Park Drive. Alliance also provided a drawing titled “Phase II Roadway Improvements”, prepared by Alliance and dated November 14, 2018. This drawing presents proposed construction area along MacMillan Park Drive and SC Highway 160.

PSI understands the project will consist of widening the existing roadway and that the construction will occur in two phases. The Phase I improvements will consist of widening MacMillan Park Drive to allow for adding approximately 450 linear feet of left turn lane from MacMillan Park Drive to SC Highway 160. Phase II improvements will consist of extending the left turn lane added to MacMillan Park Drive during Phase I approximately 900 linear feet and extending the right turn lane from SC Highway 160 on to MacMillan Park Drive to total approximately 600 linear feet. Traffic loading information was not provided and there is no traffic count information regarding MacMillan Park Drive from the SCDOT’s Traffic Count website. This report is based on traffic loading of 3,000,000 ESALS for the 20-year serviceability. If alternate traffic loading requirements are needed, please contact PSI so this report and analysis may be revised accordingly.

Based on existing topography, anticipated cuts and fills will range from approximately 1 to 5 feet.

The information presented in this section was used in the evaluation. If any of the noted information is incorrect or has changed, please inform PSI so that we may amend the recommendations presented in this report, if appropriate. If PSI is not retained to perform this function, PSI cannot be responsible for the impact of the changes on the performance of the project.

1.3 PURPOSE AND SCOPE OF WORK

The purpose of this study was to obtain information regarding the general subsurface conditions within the proposed construction area, to assess the engineering characteristics of the subsurface materials, and to provide general design recommendations regarding the geotechnical aspects of the proposed construction. To accomplish this, PSI performed a site reconnaissance, drilled six soil

test borings within the areas of proposed site improvements, conducted laboratory classification testing and prepared this report summarizing the findings, as well as our conclusions and recommendations.

The scope of our geotechnical services did not include an environmental assessment for determining the presence or absence of wetlands, or hazardous or toxic materials in the soil, bedrock, groundwater, or air, on or below or around this site. Any statement in this report or on the boring logs regarding odors, colors, unusual or suspicious items, or conditions are strictly for the information of our client.

2 EXPLORATION PROCEDURES

2.1 FIELD SERVICES

PSI advanced six soil test borings (Borings B-1 through B-6) within the proposed site. Boring B-1 was drilled in ROW adjacent to the proposed right turn lane on Highway 160. Borings B-2 through B-6 were drilled in the existing roadway along MacMillan Park Drive. The approximate boring locations are shown on the "Approximate Boring Location Plan" included in the Appendix. Horizontal and vertical survey control was not performed for the test boring locations prior to our field exploration program. The borings were located based upon measured distances and relationships to obvious landmarks, and the Proposed Site Plan provided by the client. The boring locations are considered accurate to the degree implied by these methods.

Soil test borings were advanced at this site by Elite Techniques, a subcontractor hired by PSI, utilizing a Geoprobe 7822DT drilling rig using hollow-stem, continuous-flight augers. All boring and sampling operations were conducted in general compliance with ASTM D 1586. At regular intervals, soil samples were obtained with a standard 2-inch O.D. split-barrel sampler.

An automatic trip drop hammer was used for the standard penetration testing, which has a higher efficiency than a manual cathead-and-rope hammer. Typically, the automatic hammer yields lower standard penetration test resistances (N-values) than a manual cathead-and-rope hammer. This reduction has been taken into account in our evaluation.

The recovered soil samples were transported to our laboratory where they were visually classified. A "Boring Log" was prepared for each boring and the "Logs" are included in the Appendix of the report. The logs were prepared using the observations made in the field by the driller, as well as the classifications in the laboratory and the laboratory test results. Strata descriptions, presented on the logs, were based on visual-manual evaluations by our engineer and include the classifications in general accordance with the Unified Soil Classification System (USCS). The "Soil Classification Chart", included in the Appendix, illustrates the USCS legend depicted on the logs. Existing topographic site information was not provided to PSI. Therefore, ground surface elevations are not presented on the boring logs or referenced in this report.

Groundwater level measurements and caved depths were measured in the boreholes at the time of boring and upon completion. The results of the readings are included on the soil test boring logs. The borings were backfilled immediately upon completion, using the soil cuttings, sand, and asphalt patch, for safety considerations.

2.2 LABORATORY TESTING

A staff engineer visually-manually classified the soil samples in the laboratory in general accordance with the Unified Soil Classification System (USCS) (ASTM D2487 and D2488). Percent finer than the No. 200 sieve (ASTM D1140), Atterberg limits tests (ASTM D4318), natural water content determinations (ASTM D2216), Standard Proctor (AASHTO T99), and California Bearing Ratio (AASHTO T193) were conducted on representative samples recovered from the test boring locations. The laboratory test results are presented in Section 3.3.5 and are shown on the individual boring logs.

3 SITE AND SUBSURFACE CONDITIONS

3.1 SITE DESCRIPTION

The proposed site discussed herein is located at the intersection of MacMillan Park Drive and Highway 160 in Fort Mill, South Carolina. Approximately 1,950 linear feet of roadway will be expanded into undeveloped areas in the SCDOT ROW.

At the time of our reconnaissance, the area of roadway expansion along MacMillan Park Drive is serving as a “green area” with grass, trees, and shrubs. We observed various underground utilities in the ROW area. The area of roadway expansion along Highway 160 is currently a “green area” with grass and trees. The ROW along Highway 160 currently has a ditch approximately 3 to 5-foot-deep that will need to be filled in or moved prior to the roadway expansion.

3.2 SITE GEOLOGY

The project site is located within Lancaster County, South Carolina, and lies within the Charlotte Terrane of the Piedmont Physiographic Province of the eastern United States. This province is characterized by broad, gently rolling ridges formed on the stronger bedrock of the area. Between these ridges, lowlands and drainage areas are formed on the less resistant bedrock. The Piedmont is a complex assemblage of igneous (volcanic and plutonic) and sedimentary rocks that were generally formed during the Late Proterozoic Era and the Early Cambrian Period (approximately 550 to 900 million years ago). During and subsequent to formation these rocks were subjected to several major tectonic events, including plate collisions, folding, faulting, and igneous intrusions, that resulted in the uplift and metamorphism of the preexisting rocks. The tectonic activity generally stopped about 200 to 250 million years ago and erosional forces have formed the current ground surface. Review of the Geologic Map of South Carolina (compiled by the South Carolina Department of Natural Resources - Geological Survey, 2005) indicates the site is underlain by plutonic rocks of the Neoproterozoic to late Paleozoic age.

Residual soils are the result of in-place physical and chemical weathering of the parent bedrock. In this area, residual soils generally consist of an upper layer of fine-grained SILT or CLAY underlain by Sandy SILT or Silty SAND. The sand content generally increases with depth. Separating the residual soil from the underlying parent bedrock is typically a transition zone of high consistency material referred to as partially weathered rock. Partially weathered rock is defined as residual material with standard penetration resistance (ASTM D1586) in excess of 50 blows per 6-inches penetration.

The weathering processes that produced the residual soils and partially weathered rock were extremely variable, due to such factors as rock type and mineralogy, past groundwater conditions, and the tectonic history of the specific area (resulting in localized fractures, joints and faults within the bedrock). Differential weathering of the parent bedrock has resulted in highly variable subsurface conditions and can include abrupt changes in soil type and consistency over relatively short horizontal and vertical distances. Furthermore, depths to rock can also be highly variable; and suspended boulders, discontinuous rock layers/lenses, or rock pinnacles can be present within the residual soils and transitional zones of soft weathered rock.

3.3 SUBSURFACE CONDITIONS

General subsurface conditions encountered during the subsurface exploration are described below. For more detailed soil descriptions and stratifications at the boring locations, the Boring Logs should be reviewed. The Boring Logs represent our interpretation of the subsurface conditions based on a review of the field logs and an engineering examination of the samples. The horizontal stratification lines designating the interface between various strata represent approximate boundaries. Transition between different strata in the field may be gradual in both the horizontal and vertical directions. Groundwater, or lack thereof, encountered in the borings and noted on the “Boring Logs” represents conditions only at the time of the exploration.

3.3.1 SURFACE MATERIALS

Initially, a topsoil layer about 3 inches thick was encountered at the ground surface within boring B-1. Deeper pockets of topsoil may be present in other areas of the site. The term topsoil, as used in this report, is a general designation given to the surface horizon of soil which appears to have an elevated organic content. No laboratory testing was performed on the topsoil to determine its suitability for supporting plant life, or ability to satisfy a particular specification.

Asphalt and stone base thickness measurements were taken in borings B-2 through B-6. Asphalt thickness ranged from 3 to 6 inches with the thicker areas being closer to the intersection of Highway 160. Stone base thickness ranged from 7 to 9 inches with exception to boring B-6 which had very little to no stone base under the asphalt.

3.3.2 RESIDUUM

Residual soils were encountered at all six boring locations. Residual soils encountered at the site generally consisted of medium stiff to stiff Sandy SILT (ML) and very loose to loose Silty SAND (SM). The N_{60}-values recorded in in the residuum ranged from 2 to 26 bpf but were typically in the 3 to 8 bpf range. All of the borings were terminated in the residual soils at depths ranging from about 10 to 15 feet beneath the existing grade.

3.3.3 GROUNDWATER INFORMATION

The borings were checked for groundwater at the time of drilling and upon completion. Borings were backfilled immediately upon completion, using the soil cuttings and sand, for safety considerations. Groundwater was not encountered in any of the six borings during the time of drilling or upon completion.

Subsurface water levels within this region tend to fluctuate with seasonal and climatic changes, as well as with some types of construction operations. Generally, the highest groundwater levels occur in late winter and early spring; and the lowest levels in late summer and early fall. Therefore, water may be encountered during construction at depths not indicated during this study.

Additionally, perched groundwater conditions can develop over low permeability soil or weathered rock following periods of heavy or prolonged precipitation. Groundwater may be encountered during construction at depths not indicated during this exploration.

3.3.4 LABORATORY TEST RESULTS

The results of the laboratory testing program are summarized in the following table.

Sample Location	Sample Depth (ft)	Moisture Content (%)	Percent Fines (%)	ATTERBERG LIMITS			USCS Soil Classification
				LL	PL	PI	
B-2	1 – 2.5	18.8	50.1	37	28	9	ML
B-4	1 – 2.5	13.3	39.6	NP	NP	NP	SM
B-5	1 – 2.5	20.2	53.8	42	25	17	CL
B-6	1 – 2.5	22.2	65.7	46	20	26	CL
B-6	3.5 – 5	17.3	-	-	-	-	-
B-6	6 – 7.5	24.4	-	-	-	-	-
B-2 thru 5	composite	-	52.3	37	22	16	CL

A bulk sample was taken from borings B-2 thru B-5 and was used to perform a Standard Proctor and a CBR. The in-place soils were found to have a max dry density of 112.0 with an optimum moisture content of 14.7% and CBR of 4.4.

4 GEOTECHNICAL EVALUATION AND RECOMMENDATIONS

4.1 GEOTECHNICAL ASSESSMENT

The following geotechnical design recommendations have been developed on the basis of the previously described project characteristics and subsurface conditions encountered. If there are any changes in these project criteria, including location on the site or the construction of earth retaining structures are required, a review should be made by PSI to determine if modifications to the recommendations are warranted.

Once final design plans and specifications are available, a general review by PSI is recommended as a means to check that the evaluations made in preparation of this report are correct and that earthwork recommendations are properly interpreted and implemented.

Based on the results of the fieldwork, laboratory evaluation and engineering analyses, we have identified the following potential constraints to the development of this site; the presence of previously-placed fill soils and existing construction on-site. However, we believe with proper planning and execution, the site can be adapted for the proposed structure and associated improvements.

4.2 SITE PREPARATION AND EARTHWORK

Wet soils, topsoil, organics, debris, and other unsuitable materials should be stripped from an area extending at least 10 feet beyond the outline of the proposed construction.

After stripping, removal of unsuitable soils, and rough excavation grading, we recommend that areas to provide support for the pavements, and/or structural fill be evaluated for the presence of loose soils by proof-rolling and inspection by the Geotechnical Engineer. Construction traffic should be kept to a minimum on the exposed soils to reduce the potential for creating an unstable subgrade. If the surface soils become softened/unstable during wet weather or frozen, these soils shall be removed before additional fill is placed.

The proof-roll should be performed using a loaded tandem axle dump truck, or similar rubber-tired equipment, weighing between 15 and 20 tons. The vehicle should make at least four passes over each location, with the last two passes perpendicular to the first two if area allows. Areas that wave, rut, or deflect significantly and continue to do so after several passes of the proof-roller should be undercut to firmer soils as recommended by the geotechnical engineer. Undercut areas should be backfilled in thin lifts with approved, compacted fill materials. Proof-roll operations should be monitored carefully by PSI's Project Geotechnical Engineer.

Drying soils for re-use as structural fill is often considered a routine aspect of typical grading operations and is not considered a pay item. If unit prices for earthwork operations are established, they should be examined closely before the contract is executed. If undercutting is a pay item, then undercut volumes should be determined by field measurement. Methods such as counting trucks should not be used for determination of undercut volume, as they are less accurate.

Recommended criteria for soil fill characteristics (both on-site and imported materials) and compaction procedures are listed below. The project design documents should include the following recommendations to address proper placement and compaction of project fill materials. Earthwork operations should not begin until representative samples are collected and tested. The maximum dry density and optimum moisture content should be determined.

<u>EARTH FILL MATERIALS</u>

- Imported and on-site fill material satisfactory for structural fill should include clean soil material with USCS classifications of (GW, GP, GM, SW, SP, SM, and some SC, CL or ML). The fill material should have a Standard Proctor (ASTM D698) Maximum Dry Density of at least 100 pcf, a maximum Liquid Limit of 45 and a Plasticity Index of 25 or less. Fat CLAY (CH) and Elastic SILT (MH) soils should not be used as structural fill.

- Organic content or other foreign matter (debris) should be no greater than 3 percent by weight, and no large roots (greater than ¼ inch in diameter) should be allowed. Organic materials should not be intentionally mixed into structural fill.

- Material utilized as fill should not contain rocks greater that 3 inches in diameter or greater than 30 percent retained on the ¾-inch sieve.

COMPACTION RECOMMENDATIONS

- Maximum loose lift thickness – 8 inches, mass fill. Loose lifts of 4 to 6 inches in trenches and other confined spaces where hand operated equipment is used.

- Compaction requirements – 95 percent of the maximum dry density and 98 percent within the upper 12 inches as determined by the standard Proctor (ASTM D698) compaction test.

- Soil moisture content at time of compaction – within ±3 percent of the optimum moisture content.

TEST CRITERIA TO EVALUATE FILL AND COMPACTION

- One standard Proctor compaction test and one Atterberg limits test for each soil type used as project fill. Gradation tests may be necessary and should be performed at the geotechnical engineer's discretion.

- One density test every 500 linear feet for each lift or two tests per lift, whichever is greater (for preliminary planning only; the test frequency should be determined by our engineering staff).

- Trench fill areas – one density test approximately every 75 linear feet at vertical intervals of 2 feet or less.

It will be important to maintain positive site drainage throughout construction. Storm water runoff should be diverted around the monument sign and pavement areas. The site should be graded at all times such that water is not allowed to pond. The surface should be sealed with a smooth drum roller to enhance drainage if precipitation is expected. Subgrades damaged by construction equipment should be repaired immediately to avoid further degradation in adjacent areas and to help prevent water ponding.

Should there be a significant time lag or period of inclement weather between site grading and the fine grading prior to the placement of stone or concrete, the Geotechnical Engineer of Record or qualified representative should assess the condition of the prepared subgrade. The subgrade may require scarification and re-compaction or other remedial measures to provide a firm and unyielding subgrade prior to final roadway construction

4.3 PAVEMENT DESIGN GUIDELINES AND PARAMETERS

4.3.1 PAVEMENT SUBGRADE PREPARATION

Following stripping of topsoil and any deleterious materials, we recommend the proposed pavement subgrade be prepared and compacted in accordance with the recommendations provided in Section 4.2 "SITE PREPARATION AND EARTHWORK" of this report.

We recommend proof-rolling and re-compacting the upper 1-foot of subgrade immediately prior to placement of the ABC base course. The exposed pavement subgrade should also be evaluated by a representative of PSI immediately prior to placing ABC. If low consistency soils are encountered which cannot be adequately compacted in place, such soils should be removed and replaced with well-compacted soil fill or crushed stone materials.

Site grading is generally accomplished early in the construction phase. Subsequently as construction proceeds, the subgrade may be disturbed due to utility excavations, construction traffic, desiccation, and rainfall. As a result, the pavement subgrade may not be suitable for pavement construction and corrective action will be required. The subgrade should be carefully evaluated at the time of pavement construction and subgrade areas should be reworked, moisture conditioned, and properly compacted to the recommendations in this report immediately prior to paving.

Prevention of infiltration of water into the subgrade is essential for the successful long-term performance of any pavement. Both the subgrade and the pavement surface should be sloped to promote surface drainage away from the pavement structure.

4.3.2 FLEXIBLE PAVEMENT RECOMMENDATIONS

Traffic loading information was not provided and there is no traffic count information regarding MacMillan Park Drive from the SCDOT's Traffic Count website. This report is based on an assumed traffic loading of 3,000,000 ESALS for the 20-year serviceability. A California Bearing Ratio (CBR) value of 4.4, based on a laboratory CBR test, was used for the on-site soils expected to compose the pavement subgrade.

Based on our experience with similar facilities and subgrade conditions which are typical for this region, we recommend the following preliminary pavement sections. Once detailed traffic information is available, actual pavement section calculations should be performed to develop the design sections.

PAVEMENT SECTION	MATERIAL THICKNESS (in.)			TOTAL PAVEMENT SECTION (in.)
	Graded Aggregate Base	Asphalt Course INTERMEDIATE	Asphalt Course SURFACE	
20 year	10	4	2	16

Notes: 1) 20 year calculated based on traffic loading of 3,000,000 ESALS or less.

The above sections represent minimum thickness representative of typical, local construction practices, and as such periodic maintenance should be anticipated. The above preliminary pavement section recommendations should be evaluated after site grading and additional CBR tests on the graded subgrade soils may be warranted.

5 CONSTRUCTION CONSIDERATIONS

5.1 GROUNDWATER

Groundwater infiltration was not encountered in any of the borings and proposed grading information was not provided to PSI. Groundwater is not expected to significantly impact proposed site development. However, groundwater levels within this region tend to fluctuate with seasonal and climatic changes, and confined pockets of perched water often occur above the groundwater table. Generally, the highest groundwater levels occur in late winter and early spring; and the lowest levels in late summer and early fall. Therefore, water may be encountered during construction at depths not indicated during this study.

If groundwater is encountered, we recommend that the groundwater table be lowered and maintained at a depth of at least 2 feet below bearing levels and excavation bottoms during construction. Adequate control of groundwater could likely be accomplished by means of pumping from gravel-lined, cased sumps. However, the contractor should be responsible for selecting the most optimal dewatering method. Furthermore, we recommend that the Contractor determine the actual groundwater levels at the time of construction to determine the groundwater impact on the construction procedures.

The contractor should be prepared to promptly remove surface water from the general construction area by similar methods. If groundwater is encountered during trenching or foundation installation, PSI should be notified.

5.2 EXCAVATION AND SAFETY

Neither partially weathered rock (PWR) nor auger refusal material were encountered in any of the borings. Based on the data available from the borings, anticipated excavations during site grading will generally encounter loose soils that can generally be removed by conventional earthmoving equipment such as pans, scrapers, and track-mounted excavators (track-hoes).

In evaluating grading considerations, please keep in mind that subsurface conditions, particularly the level and location of rock, whether in boulder or massive form, vary erratically in the Piedmont Geologic Province of which Lancaster County and this site are parts. Therefore, rock may be encountered at shallow depths. If large boulders or massive rock is encountered during the grading operations between boring locations, blasting may be necessary to facilitate removal. In addition, confined excavations such as utility trenches are more likely to require rock excavation techniques than large open cuts. All excavations should be sloped or shored in accordance with applicable OSHA regulations.

Excavation depths shall not exceed the horizontal distance to any existing foundation. If an excavation depth must exceed the horizontal distance to any foundation, shoring of the excavation will be required to reduce the potential for foundation undermining.

In Federal Register, Volume 54, No. 209 (October 1989), the United States Department of Labor, Occupational Safety and Health Administration (OSHA) amended its "Construction Standards for Excavations, 29 CFR, Part 1926, Subpart P". This document was issued to better allow for the safety of workers entering trenches or excavations. It is mandated by this federal regulation that excavations, whether they be utility trenches, basement excavations, UST basin excavations, or footing excavations, be constructed in accordance with the new OSHA guidelines. It is our understanding that these regulations are being strictly enforced and if they are not closely followed, the owner and the Contractor could be liable for substantial penalties.

The Contractor is solely responsible for designing and constructing stable, temporary excavations and should shore, slope, or bench the sides of the excavations as required to maintain stability of both the excavation sides and bottom. The Contractor's "responsible person", as defined in 29 CFR Part 1926, should evaluate the soil exposed in the excavations as part of the Contractor's safety procedures. In no case should slope height, slope inclination, or excavation depth, including utility trench excavation depth, exceed those specified in all local, state, and federal safety regulations.

We are providing this information solely as a service to our client. PSI does not assume responsibility for construction site safety or the Contractor's or other parties' compliance with local, state, and federal safety or other regulations. Groundwater control is critical to excavation safety and is described in Section 5.1, above.

6 REPORT LIMITATIONS

The recommendations submitted are based on the available subsurface information obtained by PSI and design details furnished by **ACE** for the proposed project. If there are any revisions to the plans for this project or if deviations from the subsurface conditions noted in this report are encountered during construction, PSI should be notified immediately to determine if changes in recommendations are required. If PSI is not retained to perform these functions, we will not be responsible for the impact of those conditions on the geotechnical recommendations for the project.

PSI warrants that the findings, recommendations, specifications, or professional advice contained herein have been made in accordance with generally accepted professional geotechnical engineering practices in the local area at the date of this report. No other warranties are implied or expressed.

After the plans and specifications are more complete, PSI should be retained and provided the opportunity to review the final design plans and specifications to check that our engineering recommendations have been properly incorporated into the design documents. At that time, it may be necessary to submit supplementary recommendations. This report has been prepared for the exclusive use of **ACE** and their consultants for the specific application to the **Proposed Project Lego Roadway Expansion at the intersections of MacMillan Park Drive and Highway 160 in Fort Mill, South Carolina**.

APPENDICES

BORING LOCATION PLAN

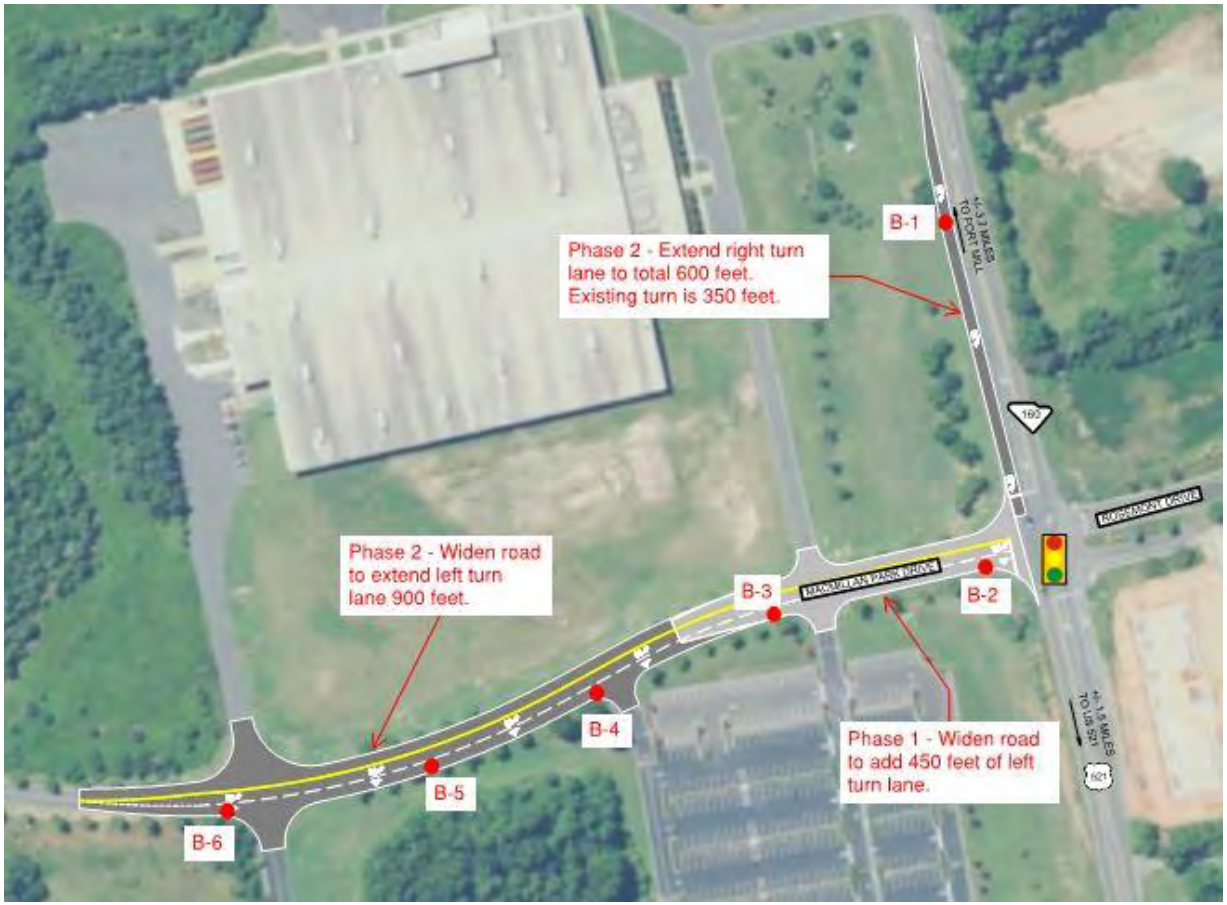

Project Name:	**Project Lego Roadway Improvements**	**Base Drawing provided by Alliance Consulting Engineers**	**Not to Scale**
Project Location:	**Intersection of Highway 160 and MacMillan Park Drive Lancaster County South Carolina**	**Approximate Boring Location Plan**	intertek psi **534 Saint Andrews Road, Suite C, Columbia, SC 29210**
Client:	**Alliance Consulting Engineers**		
Project No.: 04511011	**Date: June 2019**		

GENERAL NOTES AND SOIL CLASSIFICATION CHART

GENERAL NOTES

SAMPLE IDENTIFICATION

The Unified Soil Classification System (USCS), AASHTO 1988 and ASTM designations D2487 and D-2488 are used to identify the encountered materials unless otherwise noted. Coarse-grained soils are defined as having more than 50% of their dry weight retained on a #200 sieve (0.075mm); they are described as: boulders, cobbles, gravel or sand. Fine-grained soils have less than 50% of their dry weight retained on a #200 sieve; they are defined as silts or clay depending on their Atterberg Limit attributes. Major constituents may be added as modifiers and minor constituents may be added according to the relative proportions based on grain size.

DRILLING AND SAMPLING SYMBOLS

SFA: Solid Flight Auger - typically 4" diameter flights, except where noted.
HSA: Hollow Stem Auger - typically 3¼" or 4¼ I.D. openings, except where noted.
M.R.: Mud Rotary - Uses a rotary head with Bentonite or Polymer Slurry
R.C.: Diamond Bit Core Sampler
H.A.: Hand Auger
P.A.: Power Auger - Handheld motorized auger

SS: Split-Spoon - 1 3/8" I.D., 2" O.D., except where noted.
ST: Shelby Tube - 3" O.D., except where noted.
RC: Rock Core
TC: Texas Cone
BS: Bulk Sample
PM: Pressuremeter
CPT-U: Cone Penetrometer Testing with Pore-Pressure Readings

SOIL PROPERTY SYMBOLS

N: Standard "N" penetration: Blows per foot of a 140 pound hammer falling 30 inches on a 2-inch O.D. Split-Spoon.
N_{60}: A "N" penetration value corrected to an equivalent 60% hammer energy transfer efficiency (ETR)
Q_u: Unconfined compressive strength, TSF
Q_p: Pocket penetrometer value, unconfined compressive strength, TSF
w%: Moisture/water content, %
LL: Liquid Limit, %
PL: Plastic Limit, %
PI: Plasticity Index = (LL-PL),%
DD: Dry unit weight, pcf
▼,▽,▼ Apparent groundwater level at time noted

RELATIVE DENSITY OF COARSE-GRAINED SOILS

Relative Density	N - Blows/foot
Very Loose	0 - 4
Loose	4 - 10
Medium Dense	10 - 30
Dense	30 - 50
Very Dense	50 - 80
Extremely Dense	80+

ANGULARITY OF COARSE-GRAINED PARTICLES

Description	Criteria
Angular:	Particles have sharp edges and relatively plane sides with unpolished surfaces
Subangular:	Particles are similar to angular description, but have rounded edges
Subrounded:	Particles have nearly plane sides, but have well-rounded corners and edges
Rounded:	Particles have smoothly curved sides and no edges

GRAIN-SIZE TERMINOLOGY

Component	Size Range
Boulders:	Over 300 mm (>12 in.)
Cobbles:	75 mm to 300 mm (3 in. to 12 in.)
Coarse-Grained Gravel:	19 mm to 75 mm (¾ in. to 3 in.)
Fine-Grained Gravel:	4.75 mm to 19 mm (No.4 to ¾ in.)
Coarse-Grained Sand:	2 mm to 4.75 mm (No.10 to No.4)
Medium-Grained Sand:	0.42 mm to 2 mm (No.40 to No.10)
Fine-Grained Sand:	0.075 mm to 0.42 mm (No. 200 to No.40)
Silt:	0.005 mm to 0.075 mm
Clay:	<0.005 mm

PARTICLE SHAPE

Description	Criteria
Flat:	Particles with width/thickness ratio > 3
Elongated:	Particles with length/width ratio > 3
Flat & Elongated:	Particles meet criteria for both flat and elongated

RELATIVE PROPORTIONS OF FINES

Descriptive Term	% Dry Weight
Trace:	< 5%
With:	5% to 12%
Modifier:	>12%

GENERAL NOTES

(Continued)

CONSISTENCY OF FINE-GRAINED SOILS

Q_U - TSF	N - Blows/foot	Consistency
0 - 0.25	0 - 2	Very Soft
0.25 - 0.50	2 - 4	Soft
0.50 - 1.00	4 - 8	Firm (Medium Stiff)
1.00 - 2.00	8 - 15	Stiff
2.00 - 4.00	15 - 30	Very Stiff
4.00 - 8.00	30 - 50	Hard
8.00+	50+	Very Hard

MOISTURE CONDITION DESCRIPTION

Description	Criteria
Dry:	Absence of moisture, dusty, dry to the touch
Moist:	Damp but no visible water
Wet:	Visible free water, usually soil is below water table

RELATIVE PROPORTIONS OF SAND AND GRAVEL

Descriptive Term	% Dry Weight
Trace:	< 15%
With:	15% to 30%
Modifier:	>30%

STRUCTURE DESCRIPTION

Description	Criteria
Stratified:	Alternating layers of varying material or color with layers at least ¼-inch (6 mm) thick
Laminated:	Alternating layers of varying material or color with layers less than ¼-inch (6 mm) thick
Fissured:	Breaks along definite planes of fracture with little resistance to fracturing
Slickensided:	Fracture planes appear polished or glossy, sometimes striated
Blocky:	Cohesive soil that can be broken down into small angular lumps which resist further breakdown
Lensed:	Inclusion of small pockets of different soils
Layer:	Inclusion greater than 3 inches thick (75 mm)
Seam:	Inclusion 1/8-inch to 3 inches (3 to 75 mm) thick extending through the sample
Parting:	Inclusion less than 1/8-inch (3 mm) thick

SCALE OF RELATIVE ROCK HARDNESS

Q_U - TSF	Consistency
2.5 - 10	Extremely Soft
10 - 50	Very Soft
50 - 250	Soft
250 - 525	Medium Hard
525 - 1,050	Moderately Hard
1,050 - 2,600	Hard
>2,600	Very Hard

ROCK BEDDING THICKNESSES

Description	Criteria
Very Thick Bedded	Greater than 3-foot (>1.0 m)
Thick Bedded	1-foot to 3-foot (0.3 m to 1.0 m)
Medium Bedded	4-inch to 1-foot (0.1 m to 0.3 m)
Thin Bedded	1¼-inch to 4-inch (30 mm to 100 mm)
Very Thin Bedded	½-inch to 1¼-inch (10 mm to 30 mm)
Thickly Laminated	1/8-inch to ½-inch (3 mm to 10 mm)
Thinly Laminated	1/8-inch or less "paper thin" (<3 mm)

ROCK VOIDS

Voids	Void Diameter
Pit	<6 mm (<0.25 in)
Vug	6 mm to 50 mm (0.25 in to 2 in)
Cavity	50 mm to 600 mm (2 in to 24 in)
Cave	>600 mm (>24 in)

GRAIN-SIZED TERMINOLOGY

(Typically Sedimentary Rock)

Component	Size Range
Very Coarse Grained	>4.76 mm
Coarse Grained	2.0 mm - 4.76 mm
Medium Grained	0.42 mm - 2.0 mm
Fine Grained	0.075 mm - 0.42 mm
Very Fine Grained	<0.075 mm

ROCK QUALITY DESCRIPTION

Rock Mass Description	RQD Value
Excellent	90 -100
Good	75 - 90
Fair	50 - 75
Poor	25 -50
Very Poor	Less than 25

DEGREE OF WEATHERING

Slightly Weathered:	Rock generally fresh, joints stained and discoloration extends into rock up to 25 mm (1 in), open joints may contain clay, core rings under hammer impact.
Weathered:	Rock mass is decomposed 50% or less, significant portions of the rock show discoloration and weathering effects, cores cannot be broken by hand or scraped by knife.
Highly Weathered:	Rock mass is more than 50% decomposed, complete discoloration of rock fabric, core may be extremely broken and gives clunk sound when struck by hammer, may be shaved with a knife.

SOIL CLASSIFICATION CHART

NOTE: DUAL SYMBOLS ARE USED TO INDICATE BORDERLINE SOIL CLASSIFICATIONS

MAJOR DIVISIONS			SYMBOLS GRAPH	SYMBOLS LETTER	TYPICAL DESCRIPTIONS
COARSE GRAINED SOILS MORE THAN 50% OF MATERIAL IS LARGER THAN NO. 200 SIEVE SIZE	GRAVEL AND GRAVELLY SOILS MORE THAN 50% OF COARSE FRACTION RETAINED ON NO. 4 SIEVE	CLEAN GRAVELS		GW	WELL-GRADED GRAVELS, GRAVEL - SAND MIXTURES, LITTLE OR NO FINES
		(LITTLE OR NO FINES)		GP	POORLY-GRADED GRAVELS, GRAVEL - SAND MIXTURES, LITTLE OR NO FINES
		GRAVELS WITH FINES		GM	SILTY GRAVELS, GRAVEL - SAND - SILT MIXTURES
		(APPRECIABLE AMOUNT OF FINES)		GC	CLAYEY GRAVELS, GRAVEL - SAND - CLAY MIXTURES
	SAND AND SANDY SOILS MORE THAN 50% OF COARSE FRACTION PASSING ON NO. 4 SIEVE	CLEAN SANDS		SW	WELL-GRADED SANDS, GRAVELLY SANDS, LITTLE OR NO FINES
		(LITTLE OR NO FINES)		SP	POORLY-GRADED SANDS, GRAVELLY SAND, LITTLE OR NO FINES
		SANDS WITH FINES		SM	SILTY SANDS, SAND - SILT MIXTURES
		(APPRECIABLE AMOUNT OF FINES)		SC	CLAYEY SANDS, SAND - CLAY MIXTURES
FINE GRAINED SOILS MORE THAN 50% OF MATERIAL IS SMALLER THAN NO. 200 SIEVE SIZE	SILTS AND CLAYS	LIQUID LIMIT LESS THAN 50		ML	INORGANIC SILTS AND VERY FINE SANDS, ROCK FLOUR, SILTY OR CLAYEY FINE SANDS OR CLAYEY SILTS WITH SLIGHT PLASTICITY
				CL	INORGANIC CLAYS OF LOW TO MEDIUM PLASTICITY, GRAVELLY CLAYS, SANDY CLAYS, SILTY CLAYS, LEAN CLAYS
				OL	ORGANIC SILTS AND ORGANIC SILTY CLAYS OF LOW PLASTICITY
	SILTS AND CLAYS	LIQUID LIMIT GREATER THAN 50		MH	INORGANIC SILTS, MICACEOUS OR DIATOMACEOUS FINE SAND OR SILTY SOILS
				CH	INORGANIC CLAYS OF HIGH PLASTICITY
				OH	ORGANIC CLAYS OF MEDIUM TO HIGH PLASTICITY, ORGANIC SILTS
HIGHLY ORGANIC SOILS				PT	PEAT, HUMUS, SWAMP SOILS WITH HIGH ORGANIC CONTENTS

psi

BORING LOGS

BORING B-1

DATE STARTED:	6/14/19	**DRILL COMPANY:**	Elite Techniques
DATE COMPLETED:	6/14/19	**DRILLER:** Lattimore	**LOGGED BY:** Steege
COMPLETION DEPTH	15.0 ft	**DRILL RIG:**	Geoprobe 7822 DT
BENCHMARK:	N/A	**DRILLING METHOD:**	Hollow Stem Auger
ELEVATION:	N/A	**SAMPLING METHOD:**	2-in SS, Standard
LATITUDE:		**HAMMER TYPE:**	Automatic
LONGITUDE:		**EFFICIENCY**	N/A
STATION: N/A	**OFFSET:** N/A	**REVIEWED BY:**	J. Gordon

REMARKS: Borehole backfilled upon completion.

Water		
While Drilling	None
Upon Completion	Dry
Delay	N/A

BORING LOCATION:
See Boring Location Plan

Elevation (feet)	Depth, (feet)	Graphic Log	Sample Type	Sample No.	Recovery (inches)	MATERIAL DESCRIPTION	USCS Classification	SPT Blows per 6-inch (SS)	Moisture, %	Additional Remarks
	0					**TOPSOIL** (3 inches)				
				1	18	**FILL** - Very Stiff, Brown/Red, Sandy CLAY and Medium Dense, Brown/Red, Silty SAND - Moist	CL/SM	5-6-11 N=17		
				2	18	**RESIDUUM** - Stiff, Red/Brown, CLAY - Moist	CL	3-4-8 N=12		
	5			3	18			3-4-9 N=13		
				4	18	Stiff, Brown, Sandy SILT with Clay - Moist	ML	3-5-6 N=11		
	10			5	18	Medium Dense, Brown, Silty SAND - Moist	SM	2-5-6 N=11		
	15					Boring terminated at 15 feet.				

STANDARD PENETRATION TEST DATA
N in blows/ft ◎
× Moisture ◪ PL ✚ LL
0 25 50
STRENGTH, tsf
▲ Qu ✳ Qp
0 2.0 4.0

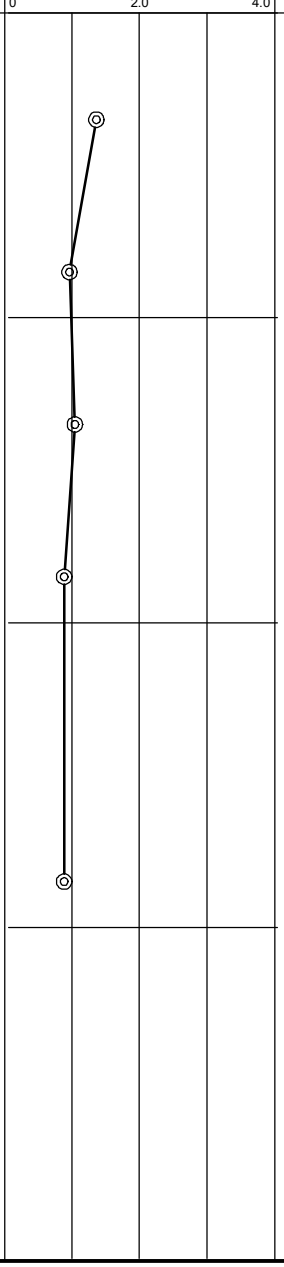

intertek psi
Professional Service Industries, Inc.
534 St. Andrews Road, Suite C
Columbia, SC 29210
Telephone: (803) 776-6050

PROJECT NO.: 04511011
PROJECT: Project Lego - Roadway Improvements
LOCATION: MacMillan Park Drive
Lancaster County, SC

The stratification lines represent approximate boundaries. The transition may be gradual.

BORING B-2

DATE STARTED:	6/14/19	**DRILL COMPANY:**	Elite Techniques
DATE COMPLETED:	6/14/19	**DRILLER:** Lattimore	**LOGGED BY:** Steege
COMPLETION DEPTH	10.0 ft	**DRILL RIG:**	Geoprobe 7822 DT
BENCHMARK:	N/A	**DRILLING METHOD:**	Hollow Stem Auger
ELEVATION:	N/A	**SAMPLING METHOD:**	2-in SS, Standard
LATITUDE:		**HAMMER TYPE:**	Automatic
LONGITUDE:		**EFFICIENCY**	N/A
STATION: N/A	**OFFSET:** N/A	**REVIEWED BY:**	J. Gordon

REMARKS: Borehole backfilled upon completion.

Water		
While Drilling	None
Upon Completion	Dry
Delay	N/A

BORING LOCATION:
See Boring Location Plan

Elevation (feet)	Depth, (feet)	Graphic Log	Sample Type	Sample No.	Recovery (inches)	MATERIAL DESCRIPTION	USCS Classification	SPT Blows per 6-inch (SS)	Moisture, %	STANDARD PENETRATION TEST DATA N in blows/ft ◎ (Moisture ×, PL ◪, LL ✚; 0–25–50) / STRENGTH, tsf (Qu ▲, Qp ✳; 0–2.0–4.0)	Additional Remarks
	0					**ASPHALT** (5 inches)					
						GRAVEL (9 inches)			19		LL = 37 PL = 28 Fines=50.1%
				1	16	**RESIDUUM** - Medium Stiff, Brown/Orange, Sandy SILT - Moist	ML	5-3-3 N=6			
				2	18	Very Loose to Loose, Brown/Orange, Silty SAND - Moist		2-2-2 N=4			
	5			3	18		SM	1-2-3 N=5			
				4	16			1-2-3 N=5			
	10					Boring terminated at 10 feet.					

intertek psi

Professional Service Industries, Inc.
534 St. Andrews Road, Suite C
Columbia, SC 29210
Telephone: (803) 776-6050

PROJECT NO.: 04511011
PROJECT: Project Lego - Roadway Improvements
LOCATION: MacMillan Park Drive
Lancaster County, SC

The stratification lines represent approximate boundaries. The transition may be gradual.

BORING B-3

DATE STARTED:	6/14/19	**DRILL COMPANY:**	Elite Techniques
DATE COMPLETED:	6/14/19	**DRILLER:** Lattimore	**LOGGED BY:** Steege
COMPLETION DEPTH	10.0 ft	**DRILL RIG:**	Geoprobe 7822 DT
BENCHMARK:	N/A	**DRILLING METHOD:**	Hollow Stem Auger
ELEVATION:	N/A	**SAMPLING METHOD:**	2-in SS, Standard
LATITUDE:		**HAMMER TYPE:**	Automatic
LONGITUDE:		**EFFICIENCY**	N/A
STATION: N/A	**OFFSET:** N/A	**REVIEWED BY:**	J. Gordon

REMARKS: Borehole backfilled upon completion.

Water		
While Drilling	None
Upon Completion	Dry
Delay	N/A

BORING LOCATION:
See Boring Location Plan

Elevation (feet)	Depth, (feet)	Graphic Log	Sample Type	Sample No.	Recovery (inches)	MATERIAL DESCRIPTION	USCS Classification	SPT Blows per 6-inch (SS)	Moisture, %	STANDARD PENETRATION TEST DATA N in blows/ft ◎ × Moisture ◪ PL ✚ LL (0 – 25 – 50) STRENGTH, tsf ▲ Qu ✳ Qp (0 – 2.0 – 4.0)	Additional Remarks
	0					**ASPHALT** (6 inches)					
						GRAVEL (7 inches)					
				1	16	**RESIDUUM** - Loose to Very Loose, Brown/Pink, Silty SAND - Moist	SM	4-4-4 N=8			
				2	16			4-3-3 N=6			
	5										
				3	18			2-1-3 N=4			
				4	18			1-2-3 N=5			
	10					Boring terminated at 10 feet.					

intertek psi

Professional Service Industries, Inc.
534 St. Andrews Road, Suite C
Columbia, SC 29210
Telephone: (803) 776-6050

PROJECT NO.: 04511011
PROJECT: Project Lego - Roadway Improvements
LOCATION: MacMillan Park Drive
Lancaster County, SC

The stratification lines represent approximate boundaries. The transition may be gradual.

BORING B-4

DATE STARTED:	6/14/19	**DRILL COMPANY:**	Elite Techniques
DATE COMPLETED:	6/14/19	**DRILLER:** Lattimore	**LOGGED BY:** Steege
COMPLETION DEPTH	10.0 ft	**DRILL RIG:**	Geoprobe 7822 DT
BENCHMARK:	N/A	**DRILLING METHOD:**	Hollow Stem Auger
ELEVATION:	N/A	**SAMPLING METHOD:**	2-in SS, Standard
LATITUDE:		**HAMMER TYPE:**	Automatic
LONGITUDE:		**EFFICIENCY**	N/A
STATION: N/A	**OFFSET:** N/A	**REVIEWED BY:**	J. Gordon

REMARKS: Borehole backfilled upon completion.

Water		
While Drilling	None
Upon Completion	Dry
Delay	N/A

BORING LOCATION:
See Boring Location Plan

Elevation (feet)	Depth, (feet)	Graphic Log	Sample Type	Sample No.	Recovery (inches)	MATERIAL DESCRIPTION	USCS Classification	SPT Blows per 6-inch (SS)	Moisture, %	Additional Remarks
	0					**ASPHALT** (3 inches)				
						GRAVEL (8 inches)				
						RESIDUUM - Loose to Very Loose, Brown/Tan, Silty SAND - Moist			13	Non-Plastic Fines=39.6%
				1	15			5-4-6 N=10		
							SM			
				2	16			2-1-3 N=4		
	5									
						Medium Dense, Brown/Gray, Silty SAND - Moist				
				3	18			5-5-6 N=11		
							SM			
				4	18			4-10-16 N=26		
	10					Boring terminated at 10 feet.				

STANDARD PENETRATION TEST DATA
N in blows/ft ◎
× Moisture ◪ PL ✚ LL
0 25 50
STRENGTH, tsf
▲ Qu ✳ Qp
0 2.0 4.0

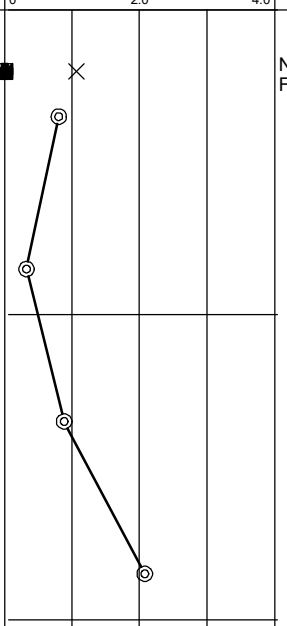

intertek psi
Professional Service Industries, Inc.
534 St. Andrews Road, Suite C
Columbia, SC 29210
Telephone: (803) 776-6050

PROJECT NO.: 04511011
PROJECT: Project Lego - Roadway Improvements
LOCATION: MacMillan Park Drive
Lancaster County, SC

The stratification lines represent approximate boundaries. The transition may be gradual.

BORING B-5

DATE STARTED:	6/14/19	**DRILL COMPANY:**	Elite Techniques
DATE COMPLETED:	6/14/19	**DRILLER:** Lattimore	**LOGGED BY:** Steege
COMPLETION DEPTH	10.0 ft	**DRILL RIG:**	Geoprobe 7822 DT
BENCHMARK:	N/A	**DRILLING METHOD:**	Hollow Stem Auger
ELEVATION:	N/A	**SAMPLING METHOD:**	2-in SS, Standard
LATITUDE:		**HAMMER TYPE:**	Automatic
LONGITUDE:		**EFFICIENCY**	N/A
STATION: N/A	**OFFSET:** N/A	**REVIEWED BY:**	J. Gordon

REMARKS: Borehole backfilled upon completion.

Water		
While Drilling	None
Upon Completion	Dry
Delay	N/A

BORING LOCATION:
See Boring Location Plan

Elevation (feet)	Depth, (feet)	Graphic Log	Sample Type	Sample No.	Recovery (inches)	MATERIAL DESCRIPTION	USCS Classification	SPT Blows per 6-inch (SS)	Moisture, %	Additional Remarks
	0					**ASPHALT** (3 inches)				
						GRAVEL (9 inches)				
				1	18	**FILL** - Medium Stiff, Brown/Orange, Sandy CLAY - Moist	CL	6-3-4 N=7	20	LL = 42 PL = 25 Fines=53.8%
				2	18	**FILL** - Stiff, Gray and Red/Brown, CLAY with Gravel and Silty Sand - Moist	CL	4-8-7 N=15		
	5			3	16	**RESIDUUM** - Very Loose to Loose, Brown/Tan, Silty SAND - Moist	SM	2-1-2 N=3		
				4	18			1-2-3 N=5		
	10					Boring terminated at 10 feet.				

STANDARD PENETRATION TEST DATA
N in blows/ft ◎
× Moisture ◪ PL ✚ LL
0 25 50
STRENGTH, tsf
▲ Qu ✳ Qp
0 2.0 4.0

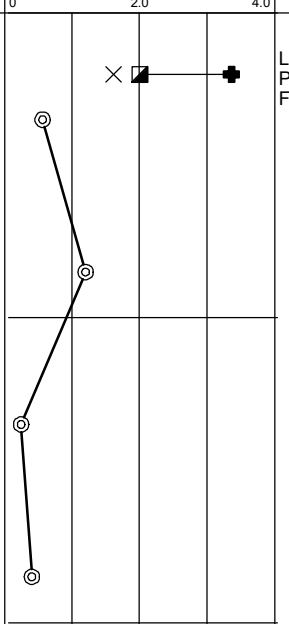

intertek psi
Professional Service Industries, Inc.
534 St. Andrews Road, Suite C
Columbia, SC 29210
Telephone: (803) 776-6050

PROJECT NO.: 04511011
PROJECT: Project Lego - Roadway Improvements
LOCATION: MacMillan Park Drive
Lancaster County, SC

The stratification lines represent approximate boundaries. The transition may be gradual.

BORING B-6

DATE STARTED:	6/14/19	**DRILL COMPANY:**	Elite Techniques
DATE COMPLETED:	6/14/19	**DRILLER:** Lattimore	**LOGGED BY:** Steege
COMPLETION DEPTH	10.0 ft	**DRILL RIG:**	Geoprobe 7822 DT
BENCHMARK:	N/A	**DRILLING METHOD:**	Hollow Stem Auger
ELEVATION:	N/A	**SAMPLING METHOD:**	2-in SS, Standard
LATITUDE:		**HAMMER TYPE:**	Automatic
LONGITUDE:		**EFFICIENCY**	N/A
STATION: N/A	**OFFSET:** N/A	**REVIEWED BY:**	J. Gordon

REMARKS: Borehole backfilled upon completion.

Water		
While Drilling	None
Upon Completion	Dry
Delay	N/A

BORING LOCATION:
See Boring Location Plan

Elevation (feet)	Depth, (feet)	Graphic Log	Sample Type	Sample No.	Recovery (inches)	MATERIAL DESCRIPTION	USCS Classification	SPT Blows per 6-inch (SS)	Moisture, %	Additional Remarks
	0					**ASPHALT** (6 inches - Very Little or No Underlying Stone Base Noted)				
				1	15	**FILL** - Medium Stiff, Dark Brown, Sandy CLAY - Moist	CL	3-3-3 N=6	22	LL = 46 PL = 20 Fines=65.7%
				2	18	**FILL** - Very Soft, Dark Brown, CLAY and Very Loose, Gray, Silty SAND - Moist to Wet	CL/SM	1-0-1 N=1	17	
	5			3	16			1-1-1 N=2	24	
				4	18	**RESIDUUM** - Very Soft, Dark Brown, CLAY - Moist	CL	1-1-1 N=2		
	10					Boring terminated at 10 feet.				

STANDARD PENETRATION TEST DATA
N in blows/ft ◎
× Moisture ◪ PL ✚ LL
0 25 50

STRENGTH, tsf
▲ Qu ✳ Qp
0 2.0 4.0

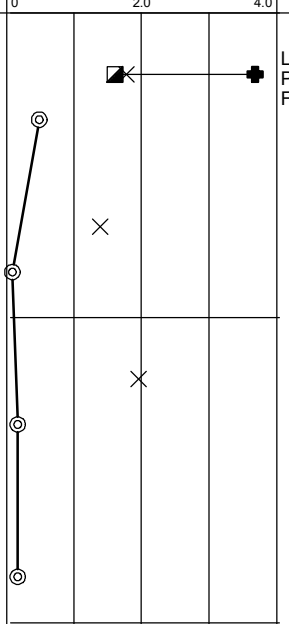

intertek psi

Professional Service Industries, Inc.
534 St. Andrews Road, Suite C
Columbia, SC 29210
Telephone: (803) 776-6050

PROJECT NO.: 04511011
PROJECT: Project Lego - Roadway Improvements
LOCATION: MacMillan Park Drive
Lancaster County, SC

The stratification lines represent approximate boundaries. The transition may be gradual.

Professional Service Industries, Inc.
534 St. Andrews Road, Suite C
Columbia, SC 29210

Phone: (803) 776-6050
Fax: (803) 772-2803

Report No: PTR:04511011-1-S1
Issue No: 1

Proctor Report

These test results apply only to the specific locations and materials noted and may not represent any other locations or elevations. This report may not be reproduced, except in full, without written permission by Professional Service Industries, Inc. If a non-compliance appears on this report, to the extent that the reported non-compliance impacts the project, the resolution is outside the PSI scope of engagement.

Client: ALLIANCE CONSULTING ENGINEERS
PO BOX 8147
COLUMBIA, SC 29202

CC:

Project: LEGO ROADWAY IMPROVEMENTS
LANCASTER, SC

Approved Signatory: Madison Devine (Staff Engineer)
Date of Issue: 6/28/2019

Sample Details

Sample ID:	04511011-1-S1	**Date Sampled:**	6/14/2019
Date Received:	6/20/2019	**Sampled By:**	PSI
Specification:	D698/T99 Standard Proctor	**Source:**	On-site Material
Material:	Brown Red CLAY with sand	**Sampling Method:**	Bulk Sample
General Location:	Borings B-2 thru B-5	**Location:**	Soil Cuttings
Tested By:	Keyonna Bridges	**Date Tested:**	6/19/2019

Dry Unit Weight - Water Content Relationship

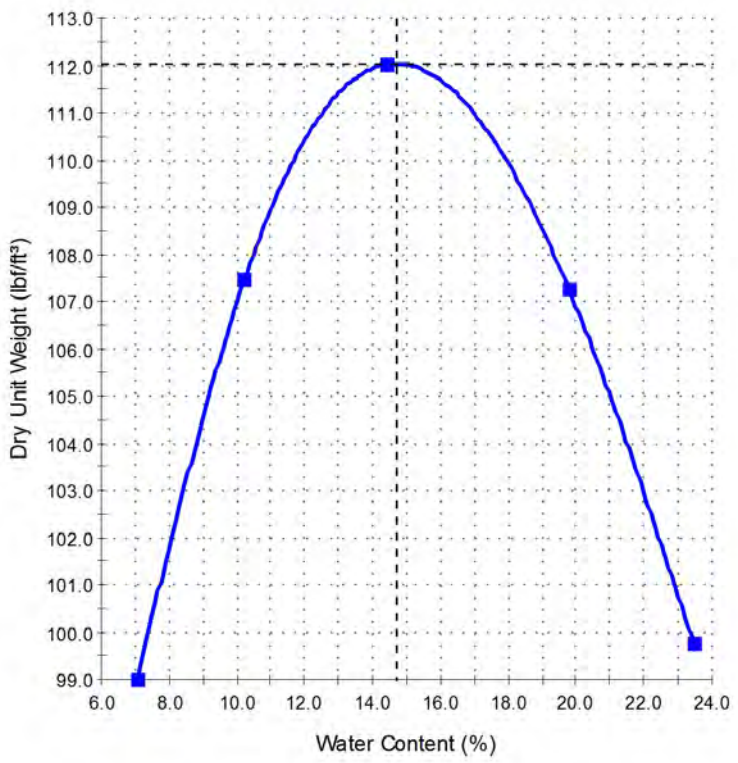

Test Results

ASTM D 698

Maximum Dry Unit Weight (lbf/ft³):	**112.0**
Optimum Water Content (%):	**14.7**
Method:	A
Preparation Method:	Dry
Rammer Type:	Manual
Retained Sieve No 4 (4.75mm) (%):	0
Passing Sieve No 4 (4.75mm) (%):	100
Tested By:	Keyonna Bridges
Date Tested:	6/19/2019

ASTM D 4318

Liquid Limit (%):	38
Plastic Limit (%):	23
Plasticity Index (%):	15
Tested By:	
Date Tested:	

Comments

© 2000-2018 QESTLab by SpectraQEST.com

Professional Service Industries, Inc.
534 St. Andrews Road, Suite C
Columbia, SC 29210

Phone: (803) 776-6050
Fax: (803) 772-2803

Report No: CBR:04511011-1-S2
Issue No: 1

These test results apply only to the specific locations and materials noted and may not represent any other locations or elevations. This report may not be reproduced, except in full, without written permission by Professional Service Industries, Inc. If a non-compliance appears on this report, to the extent that the reported non-compliance impacts the project, the resolution is outside the PSI scope of engagement.

California Bearing Ratio Test

Client: ALLIANCE CONSULTING ENGINEERS
PO BOX 8147
COLUMBIA, SC 29202

CC:

Project: LEGO ROADWAY IMPROVEMENTS
LANCASTER, SC

Approved Signatory: Madison Devine (Staff Engineer)
Date of Issue: 6/28/2019

Sample Details

Sample ID:	04511011-1-S2	**Date Sampled:**	6/14/2019
Sampled By:	PSI		
Sampling Method:	Bulk Sample		
Source:	On-site Material	**Material:**	Brown Red CLAY with sand
Specification:		**Location:**	Soil Cuttings Borings B-2 thru B-5
Tested By:	Keyonna Bridges	**Date Tested:**	6/24/2019

Stress vs Penetration

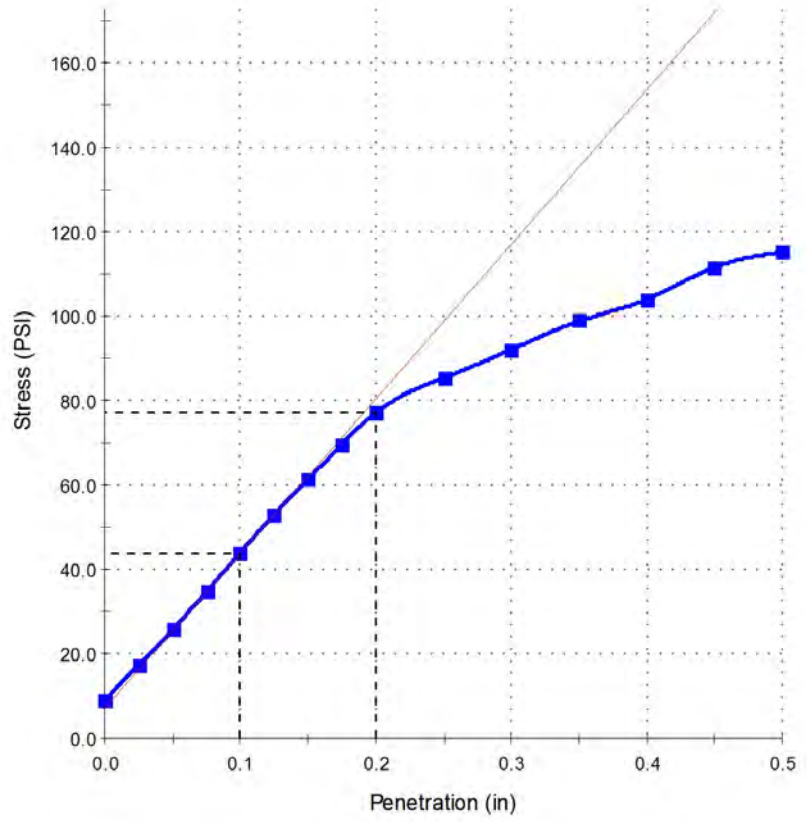

Test Results

ASTM D 1883

CBR At 0.1in (%):	4.4
CBR At 0.2in (%):	5.1
Compactive Effort:	ASTM D 698
Number of Blows:	56
% of Maximum Dry Density:	92.5
Dry Density Before Soaking (lb/ft³):	103.6
Dry Density After Soaking (lb/ft³):	102.8
MC Before Compaction (%):	15.1
MC After Compaction (%):	15.5
Moisture Content of Top 1in (%):	23.9
Average Moisture Content (%):	18.3
Maximum Dry Density (lb/ft³):	112.0
Optimum Moisture Content (%):	14.7
Sample Condition:	Soaked
Immersion Period (h):	96
Swell (%):	1.2
Surcharge Mass (lb):	10.01
Date Tested:	6/24/2019

Comments

© 2000-2018 QESTLab by SpectraQEST.com

SECTION 02 41 00
DEMOLITION

PART 1 GENERAL

1.01 RELATED REQUIREMENTS

A. Section 01 89 13 – Site Preparation.

B. Section 01 57 13 - Temporary Erosion and Sedimentation Control.

C. Section 01 70 00 - Execution Requirements.

D. Section 31 23 23 – Backfill and Compaction.

PART 2 PRODUCTS -- NOT USED

PART 3 EXECUTION

3.01 GENERAL PROCEDURES AND PROJECT CONDITIONS

A. Comply with applicable codes and regulations for demolition operations and safety of adjacent structures and the public.
   1. Obtain required permits.
   2. Take precautions to prevent catastrophic or uncontrolled collapse of structures to be removed; do not allow worker or public access within range of potential collapse of unstable structures.
   3. Provide, erect, and maintain temporary barriers and security devices.
   4. Conduct operations to minimize effects on and interference with adjacent structures and occupants.
   5. Do not close or obstruct roadways or sidewalks without permit.
   6. Conduct operations to minimize obstruction of public and private entrances and exits; do not obstruct required exits at any time; protect persons using entrances and exits from removal operations.
   7. Obtain written permission from owners of adjacent properties when demolition equipment will traverse, infringe upon or limit access to their property.

B. Do not begin removal until built elements to be salvaged or relocated have been removed.

C. Protect existing structures and other elements that are not to be removed.
   1. Provide bracing and shoring.
   2. Prevent movement or settlement of adjacent structures.
   3. Stop work immediately if adjacent structures appear to be in danger.

3.02 DEBRIS AND WASTE REMOVAL

A. Remove debris, junk, and trash from site.

B. Leave site in clean condition, ready for subsequent work.

C. Clean up spillage and wind-blown debris from public and private lands.

3.03 MEASUREMENT AND PAYMENT

A. Payment will be made for work under this Section per the Contractor's bid for the related items listed in Specification Section 00 41 00 Bid Form.

END OF SECTION

SECTON 03 10 00

CONCRETE FORMING AND ACCESSORIES

PART 1 GENERAL

1.01 SECTION INCLUDES

A. Formwork for cast-in place concrete, with shoring, bracing and anchorage.

B. Form Accessories.

C. Expansion and Contraction Joints with Accessories.

D. Water Stops

1.02 RELATED SECTIONS

A. Section 03 20 00 - Concrete Reinforcing.

B. Section 03 30 00 - Cast-In-Place Concrete.

1.03 REFERENCES

A. ACI 301 - Specifications for Structural Concrete for Buildings; American Concrete Institute International; 2010.

B. ACI 318 - Building Code Requirements for Reinforced Concrete and Commentary; American Concrete Institute International; 2011.

C. ACI 347R - Guide to Formwork for Concrete; American Concrete Institute International; 2004.

D. ACI 350R – Environmental engineering Concrete Structures; American Concrete institute International; 2004.

E. ASME A17.1 - Safety Code for Elevators and Escalators; The American Society of Mechanical Engineers; 2010.

F. PS 1 - Construction and Industrial Plywood; National Institute of Standards and Technology (Department of Commerce); 2012.

G. AHA A135.4 (1995) Basic Hardboard

H. ASTM A 1011/A 1011M (2003a) Steel, Sheet and Stip, Hot-Rolled, Carbon, Structural, High Strength Low-Alloy and High-Strength Low-Alloy With Improved Formability

I. ASTM A 109/A 109M (2003) Steel, Strip, Carbon (0.25 Maximum Percent), Cold-Rolled

J. ASTM A 167 (1999) Stainless and Heat-Resisting Chromium-Nickel Steel Plate, Sheet, and Strip

K. ASTM A 480/A 480M (2003b) General Requirements for Flat-Rolled Stainless and Heat-Resisting Steel Plate, Sheet, and Strip

L. ASTM C 919 (2002) Use of Sealants in Acoustical Applications

M. ASTM C 920 (2008) Elastomeric Joint Sealants

N. ASTM D 1751 (1999) Preformed Expansion Joint Filler for Concrete Paving and Structural Construction (Nonextruding and Resilient Bituminous Types)

O. ASTM D 1752 (1984; R 1996e1) Preformed Sponge Rubber and Cork Expansion Joint Fillers for Concrete Paving and Structural Construction

P. ASTM D 2628 (1991; R 1998) Preformed Polychloroprene Elastomeric Joint Seals for Concrete Pavements

Q. ASTM D 2835 (1989; R 1998) Lubricant for Installation of Preformed Compression Seals in Concrete Pavements

R. ASTM D 4 (1986; R 1998) Bitumen Content

S. ASTM D 412 (1998a; R 2002e1) Vulcanized Rubber and Thermoplastic Elastomers – Tension

T. ASTM D 471 (1998e1) Rubber Property - Effect of Liquids

U. ASTM D 5249 (1995; R 2000) Backer Material for Use with Cold-and Hot-Applied Joint Sealants in Portland-Cement Concrete and Asphalt Joints

V. ASTM D 5329 (1996) Sealants and Fillers, Hot-Applied, for Joints and Cracks in Asphaltic and Portland Cement Concrete Pavements

W. COE CRD-C 513 (1974) Specifications for Rubber Waterstops

X. COE CRD-C 572 (1974) Specifications for Polyvinylchloride Waterstops

1.04 DESIGN REQUIREMENTS

Formwork shall be designed in accordance with methodology of ACI 347 for anticipated loads, lateral pressures, and stresses. Forms shall be capable of producing a surface, which meets the requirements of the class of finish specified in Section 03300 CAST-IN-PLACE CONCRETE. Forms shall be capable of withstanding the pressures resulting from placement and vibration of concrete.

1.05 SUBMITTALS

A. See Section 01 30 00 – Administrative Requirements

B. Formwork - Drawings showing details of formwork, including dimensions of panel joints, supports, studding and shoring, and sequence of form and shoring removal. Manufacturer’s recommendation on method and rate of application of form release agents.

C. Samples of form ties and method of sealing form tie hole from transmission of water in hydraulic structures.

D. Construction and Control Joints: Layout and location for each type.

E. Manufacturer's literature, including safety data sheets, for preformed fillers and the lubricants used in their installation; field-molded sealants and primers (when required by sealant manufacturer); preformed compression seals and preformed control joints.

F. Water Stops - Details of splices, method of securing and supporting water stop in forms to maintain proper orientation and location during concrete placement.

G. Samples of all proposed waterstops this includes both PVC and hydrophilic waterstops.

1.06 QUALITY ASSURANCE

Design formwork under direct supervision of a Professional Structural Engineer experienced in design of concrete formwork and licensed in the State of South Carolina.

1.07 DELIVERY, STORAGE AND HANDLING

Material delivered and placed in storage shall be stored off the ground and protected from moisture, dirt, and other contaminates. Sealants shall be delivered in the manufacturer's original unopened containers. Sealants whose shelf life has expired shall be removed from the site.

PART 2 PRODUCTS

2.01 WOOD FORM MATERIALS

A. Form Materials: At the discretion of the Contractor.

B. Softwood Plywood: PS 1, C Grade, Group 2.

C. Softwood Plywood: PS 1, B-B High Density Concrete Form Overlay, Class I.

D. Plywood: Douglas Fir species; solid one side grade; sound undamaged sheets with clean, true edges.

E. Lumber: Straight, dressed on all sides, uniforms width and thickness, free from knots, offsets, holes, dents, and other surface defects; with grade stamp clearly visible.

2.02 PREFABRICATED FORMS

A. Manufacturers:

1. Alabama Metal Industries Corporation; www.amico-online.com.

2. Molded Fiber Glass Concrete Forms Co.

3. Reward Wall Systems.

4. SureVoid Products, Inc.

5. Substitutions: See Section 01 60 00 - Product Requirements.

B. Preformed Steel Forms: Minimum 16 gage matched, tight fitting, stiffened to support weight of concrete without deflection detrimental to tolerances and appearance of finished surfaces.

C. Preformed Plastic Forms: Thermoplastic polystyrene form liner, tight fitting, stiffened to support weight of concrete without deflection detrimental to tolerances and appearance of finished surfaces.

D. Glass Fiber Fabric Reinforced Plastic Forms: Matched, tight fitting, stiffened to support weight of concrete without deflection detrimental to tolerances and appearance of finished concrete surfaces.

E. Tubular Column Type: Round, spirally wound laminated fiber material, surface treated with release agent, non-reusable, of sizes indicated.

2.03 FORMWORK ACCESSORIES

A. Form Ties: Removable type, galvanized metal, fixed length, cone type, with waterproofing washer, 7/8 inch back break dimension, free of defects that could leave holes larger than 1 inch in concrete surface.

B. Water Stop Ties: For water-holding structures, basements, pipe galleries, and accessible spaces below finish grade, furnish 6-inch high polyvinylchloride waterstops. Polyvinylchloride waterstops for expansion joints shall be centerbulb type equal to No. 7C by W.R. Grace and Company, No. 9380LB by Sonneborn-Contech, RCB-6316 by BoMetals, Inc.or equal. Polyvinylchloride waterstops for construction joints shall be No. 3 by W.R. Grace and Company, No. 4316 by Sonneborn-Contech, FR-6316 by BoMetals, Inc., or equal, and as specified herein. Polyvinylchloride waterstops have the following properties:

Tensile Strength (ASTM D412)	2000 psi min.
Ultimate Elongation (ASTM D412)	350 Percent min.
Low Temperature Brittleness (ASTM D746)	(-)35 Degrees F.

Orient water stop perpendicular to tie and symmetrical about center of tie. Design ties to prevent rotation or disturbance of center portion of tie during removal of ends and to prevent water leaking along tie.

C. Form Release Agent: Material: Release agent shall not bond with, stain, or adversely affect concrete surfaces, and shall not impair subsequent treatment of concrete surfaces when applied to forms. A ready-to-use water based material formulated to reduce or eliminate surface imperfections, containing no mineral oil or organic solvents. Environmentally safe, meeting local, state, and federal regulation and can be used in potable water facilites.

D. Corners: Filleted, rigid plastic type; 1 x 1 inch size; maximum possible lengths.

E. Dovetail Anchor Slot: Stainless steel, 22 gage thick, foam filled, release tape sealed slots, anchors for securing to concrete formwork.

F. Flashing Reglets: Stainless steel, 22 gage thick, longest possible lengths, with alignment splines for joints, foam filled, release tape sealed slots, anchors for securing to concrete formwork.

G. Nails, Spikes, Lag Bolts, Through Bolts, and Anchorages: Sized as required, of sufficient strength and character to maintain formwork in place while placing concrete.

2.04 CONTRACTION JOINT STRIPS

Contraction joint strips shall be, rigid polyvinylchloride (PVC) or high impact polystyrene (HIPS) insert strips specifically designed to induce controlled cracking in slabs on grade may be used. Such insert strips shall have removable top section.

2.05 PREFORMED EXPANSION JOINT FILLER

Expansion joint filler shall be pre-formed material conforming to ASTM D 1751 or ASTM D 1752. Unless otherwise indicated, filler material shall be 10 mm 3/8 inch thick and of a width applicable for the joint formed. Backer material, when required, shall conform to ASTM D 5249.

2.06 SEALANT

A. Preformed Polychloroprene Elastomeric Type ASTM D 2628.

B. Two Component Polyurethane, Field-Molded Type ASTM C 920, Type M, Grade P or NS, Class 25, Use T for horizontal joints. Type M, Grade NS, Class 25, Use NT for vertical joints. Bond breaker material shall be polyethylene tape, coated paper, metal foil or similar type materials. The back-up material shall be compressible, non-shrink, nonreactive with

sealant and non-absorptive material type such as extruded butyl or polychloroprene rubber.

2.07 PVC WATERSTOPS FOR EXPANSION JOINTS

A. Provide flexible PVC (polyvinyl chloride) waterstop as manufactured by Greenstreak, profile style number 732, FR-6316 by BoMetals or approved equal. This profile has a length of 6 inches, a thickness of 3/8 inch a bulb diameter of 7/8 inch, and rib dimension of 5/8 inch.

B. The PVC waterstop shall be extruded from an elastomeric plastic material of which the basic resin is prime virgin polyvinyl chloride. The PVC compound shall not contain any scrapped or reclaimed material or pigment whatsoever.

C. Performance Requirements as follows:

Property	Test Method	Required Limits
Water absorption	ASTM D 570	0.15% max
Tear Resistance	ASTM D 624	200 lb/in (35 kN/m) min.
Ultimate Elongation	ASTM D 638	350% min.
Tensile Strength	ASTM D 638	2000 psi (13.78 Mpa) min.
Low Temperature Brittleness	ASTM D 746	No Failure @ -35° F (-37° C)
Stiffness in Flexure	ASTM D 747	600 psi (4.13 Mpa) min.
Specific Gravity	ASTM D 792	1.45 max.
Hardness, Shore A	ASTM D 2240	79 ±3
Tensile Strength after accelerated extraction	CRD-C 572	1850 psi (11.03 Mpa) min.
Elongation after accelerated extraction	CRD-C 572	300% min.
Effect of Alkalies after 7 days: Weight Change Hardness Change	CRD-C 572	between -0.10% / +0.25% +/- 5 points

2.08 HYDROPHILIC WATERSTOP FOR NON-MOVING CONTRACTION AND CONSTRUCTION JOINTS

A. Provide hydrophilic rubber waterstop as supplied by Greenstreak, HYDROTITE profile style number CJ-1020-2K or approved equal. This profile has a width of 0.79 inches and a height of 0.39 inches.

B. The waterstop shall be a combination of chloroprene rubber and chloroprene rubber modified to impart hydrophilic properties.

C. The waterstop shall have a delay coating to inhibit initial expansion due to moisture present in fresh concrete.

D. Performance Requirements as follows:

Chloroprene Rubber

Property	Test Method	Required Limits
Tensile Strength	ASTM D 412	1300 PSI min.
Ultimate Elongation	ASTM D 412	400% min.
Hardness (Shore A)	ASTM D 2240	50 +/- 5
Tear Resistance	ASTM D 624	100 lb/inch min.

Modified Chloroprene (Hydrophilic) Rubber

Property	Test Method	Required Limits
Tensile Strength	ASTM D 412	350 PSI min.
Ultimate Elongation	ASTM D 412	600% min.
Hardness (Shore A)	ASTM D 2240	52 +/- 5
Tear Resistance	ASTM D 624	50 lb/inch
Expansion Ratio	Volumetric Change - Distilled Water at 70° F	3 to 1 min.

2.09 WATERSTOP ACCESSORIES

A. PVC Waterstops

1. Provide factory made waterstop fabrications for all changes of direction, intersections, and transitions leaving only straight butt joint splices for the field.

2. Provide hog rings or grommets spaced at 12 inches on center along length of waterstop.

3. Provide Teflon-coated thermostatically controlled waterstop splicing irons for field butt splices.

B. Hydrophilic Waterstops

1. Provide Greenstreak 7300 two-component epoxy gel or engineer approved equal to secure HYDROTITE to rough, wet (or dry) concrete.

2. Provide LEAKMASTER single-component hydrophilic sealant or engineer approved equal to secure HYDROTITE to rough, dry concrete.

3. Provide cyanacrylate adhesive (super glue) for all splices.

PART 3 EXECUTION

3.01 ERECTION - FORMWORK

A. Erect formwork, shoring and bracing to achieve design requirements, in accordance with requirements of ACI 301.

B. Provide bracing to ensure stability of formwork. Shore or strengthen formwork subject to overstressing by construction loads.

C. Arrange and assemble formwork to permit dismantling and stripping. Do not damage concrete during stripping. Permit removal of remaining principal shores.

D. Align joints and make watertight. Keep form joints to a minimum.

E. Obtain approval before framing openings in structural members that are not indicated on drawings.

F. Provide fillet strips on external corners of beams, joists, columns, and walls. Fillet strips shall be placed in the forms.

G. Install void forms in accordance with manufacturer's recommendations. Protect forms from moisture or crushing.

H. Coordinate this section with other sections of work that require attachment of components to formwork.

I. If formwork is placed after reinforcement, resulting in insufficient concrete cover over reinforcement, request instructions from the Engineer before proceeding.

3.02 APPLICATION - FORM RELEASE AGENT

A. Apply form release agent on formwork in accordance with manufacturer's recommendations.

B. Apply prior to placement of reinforcing steel, anchoring devices, and embedded items.

C. Do not apply form release agent where concrete surfaces will receive special finishes or applied coverings that are affected by agent. Soak inside surfaces of untreated forms with clean water. Keep surfaces coated prior to placement of concrete.

3.03 INSERTS, EMBEDDED PARTS AND OPENINGS

A. Provide formed openings where required for items to be embedded in passing through concrete work.

B. Locate and set in place items that will be cast directly into concrete.

C. Coordinate with work of other sections in forming and placing openings, slots, reglets, recesses, sleeves, bolts, anchors, other inserts, and components of other work.

D. Position recessed anchor slots for brick veneer masonry anchors to spacing and intervals specified in Section 04 05 19.

E. Install accessories in accordance with manufacturer's instructions so they are straight, level and plumb. Ensure items are not disturbed during concrete placement.

F. Install waterstops in accordance with manufacturer's instructions, so they are continuous without displacing reinforcement. Heat seal joints so they are watertight.

G. Provide temporary ports or openings in formwork where required to facilitate cleaning and inspection. Locate openings at bottom of forms to allow flushing water to drain.

H. Close temporary openings with tight fitting panels, flush with inside face of forms, and neatly fitted so joints will not be apparent in exposed concrete surfaces.

3.04 FORM CLEANING

A. Clean forms as erection proceeds, to remove foreign matter within forms.

B. Clean formed cavities of debris prior to placing concrete.

1. Flush with water or use compressed air to remove remaining foreign matter. Ensure that water and debris drain to exterior through clean-out ports.

2. During cold weather, remove ice and snow from within forms. Do not use de-icing salts. Do not use water to clean out forms, unless formwork and concrete construction proceed within heated enclosure. Use compressed air or other means to remove foreign matter.

3.05 FORMWORK TOLERANCES

A. Construct formwork to maintain tolerances required by ACI 301.

B. Construct and align formwork for elevator hoistway in accordance with ASME A17.1.

C. Camber slabs and beams 1/4 inch per 10 feet.

D. Camber slabs and beams in accordance with ACI 301.

3.06 FIELD AND QUALITY CONTROL

A. An independent testing agency will perform field quality control tests, as specified in Section 01 45 29.

B. Inspect erected formwork, shoring, and bracing to ensure that work is in accordance with formwork design, and to verify that supports, fastenings, wedges, ties, and items are secure.

C. Do not reuse wood formwork more than three (3) times for concrete surfaces to be exposed to view. Do not patch formwork.

3.07 FORM REMOVAL

Forms shall be removed preventing injury to the concrete and ensuring the complete safety of the structure. Formwork for columns, walls, side of beams and other parts not supporting the weight of concrete may be removed when the concrete has attained sufficient strength to resist damage from the removal operation but not before at least 24 hours has elapsed since concrete placement. Supporting forms and shores shall not be removed from beams, floors and walls until the structural units are strong enough to carry their own weight and any other construction or natural loads. Supporting forms or shores shall not be removed before the concrete strength has reached 70 percent of design strength, as determined by field cured cylinders or other approved methods. Job-cured test specimens shall demonstrate this strength, and by a structural analysis considering the proposed loads in relation to these test strengths and the strength of forming and shoring system. The job-cured test specimens for form removal purposes shall be provided in numbers as directed and shall be in addition to those required for concrete quality control. The specimens shall be removed from molds at the age of 24 hours and shall receive, insofar as possible, the same curing and protection as the structures they represent.

3.08 CONTRACTION JOINTS

Contraction joints may be constructed by inserting tempered hardboard strips or rigid PVC or HIPS insert strips into the plastic concrete using a steel parting bar, when necessary, or by cutting the concrete with a saw after concrete has set. Joints shall be approximately 1/8 inch wide and shall extend into the slab one-fourth the slab thickness, minimum, but not less than 1 inch.

3.09 JOINT STRIPS

Strips shall be of the required dimensions and as long as practicable. After the first floating, the concrete shall be grooved with a tool at the joint locations. The strips shall be inserted in the groove and depressed until the top edge of the vertical surface is flush with the surface of the slab. The slab shall be floated and finished as specified. Working of the concrete adjacent to the joint shall be the minimum necessary to fill voids and consolidate the concrete. Where indicated, the top portion of the strip shall be sawed out after the curing period to form a recess for sealer. The removable section of PVC or HIPS strips shall be discarded and the insert left in place. True alignment of the strips shall be maintained during insertion.

3.10 SAWED JOINTS

Joint sawing shall be early enough to prevent uncontrolled cracking in the slab, but late enough that this can be accomplished without appreciable spalling. Concrete sawing machines shall be adequate in number and power, and with sufficient replacement blades to complete the sawing at the required rate. Joints shall be cut to true alignment and shall be cut in sequence of concrete

placement. Sludge and cutting debris shall be removed.

3.11 EXPANSION JOINTS

Preformed expansion joint filler shall be used in expansion and isolation joints in slabs around columns and between slabs on grade and vertical surfaces where indicated. The filler shall extend the full slab depth, unless otherwise indicated. The edges of the joint shall be neatly finished with an edging tool of 1/8 inch radius, except where a resilient floor surface will be applied. Where the joint is to receive a sealant, the filler strips shall be installed at the proper level below the finished floor with a slightly tapered, dressed and oiled wood strip temporarily secured to the top to form a recess to the size shown on the drawings. The wood strip shall be removed after the concrete has set. Contractor may opt to use a removable expansion filler cap designed and fabricated for this purpose in lieu of the wood strip. The groove shall be thoroughly cleaned of laitance, curing compound, foreign materials, protrusions of hardened concrete, and any dust, which shall be blown out of the groove with oil-free compressed air.

3.12 JOINT SEALANT

Sawed contraction joints and expansion joints in slabs shall be filled with joint sealant, unless otherwise shown. Joint surfaces shall be clean, dry, and free of oil or other foreign material, which would adversely affect the bond between sealant and concrete. Joint sealant shall be applied as recommended by the manufacturer of the sealant.

3.13 JOINTS WITH FIELD-MOLDED SEALANT

Joints shall not be sealed when the sealant material, ambient air, or concrete temperature is less than 4 degrees C 40 degrees F. When the sealants are meant to reduce the sound transmission characteristics of interior walls, ceilings, and floors the guidance provided in ASTM C 919 shall be followed. Joints requiring a bond breaker shall be coated with curing compound or with bituminous paint. Bond breaker and back-up material shall be installed where required. Joints shall be primed and filled flush with joint sealant in accordance with the manufacturer's Recommendations.

3.14 WATERSTOP INSTALLATION

A. PVC Waterstop

1. Field butt splices shall be heat fused welded using a Teflon covered thermostatically controlled waterstop splicing iron at approximately 380 degrees F. Follow approved manufacturer recommendations.

2. Lapping of waterstop, use of adhesives, or solvents shall not be allowed.

3. Center waterstop in joint and secure waterstop in correct position using hog rings or grommets spaced at 12” on centers along the length of the waterstop and wire tie to adjacent reinforcing steel.

B. Hydrophilic Waterstop

1. Cut coil ends square (or at proper angle for mitered corners) with shears or sharp blade to fit splices together without overlaps.

2. Splices shall be sealed using cyanoacrylate adhesive (super glue) and LEAKMASTER.

3. Seal watertight any exposed cells of HYDROTITE using LEAKMASTER.

4. Follow approved manufacturer recommendations.

C. Hydrophilic and PVC Intersections

1. Maintain continuity of waterstops at all intersections and transitions.

2. Joinery between PVC and HYDROTITE shall be sealed using LEAKMASTER.

3. Follow approved manufacturer recommendations.

END OF SECTION

SECTION 03 30 00

CAST-IN-PLACE CONCRETE

PART 1 GENERAL

1.01 SECTION INCLUDES

This section specifies cast-in place structural concrete.

1.02 RELATED SECTIONS

A. Section 03 10 00 - Concrete Forms and Accessories

1.03 REFERENCES

A. ACI 211.1 - Standard Practice for Selecting Proportions for Normal, Heavyweight, and Mass Concrete; American Concrete Institute International; 1991 (Reapproved 2009).

B. ACI 211.2 - Standard Practice for Selecting Proportions for Structural Lightweight Concrete; American Concrete Institute International; 1998.

C. ACI 301 - Specifications for Structural Concrete for Buildings; American Concrete Institute International; 2010.

D. ACI 302.1R - Guide for Concrete Floor and Slab Construction; American Concrete Institute International; 1996.

E. ACI 304R - Guide for Measuring, Mixing, Transporting, and Placing Concrete; American Concrete Institute International; 1989 (Reapproved 2000).

F. ACI 305R - Hot Weather Concreting; American Concrete Institute International; 2010.

G. ACI 306R - Cold Weather Concreting; American Concrete Institute International; 2010.

H. ACI 308 - Standard Practice for Curing Concrete; American Concrete Institute International; 1992 (Reapproved 2008).

I. ACI 318 - Building Code Requirements for Reinforced Concrete and Commentary; American Concrete Institute International; 2011.

J. ACI 350R – Environmental Engineering Concrete Structures; American Concrete Institute International; 2006.

K. ASTM A 185 - Standard Specification for Steel Welded Wire Fabric, Plain, for Concrete Reinforcement; 1997.

L. ASTM A 497 - Standard Specification for Steel Welded Wire fabric, Deformed, for Concrete Reinforcement; 1997.

M. ASTM A 615/A 615M - Standard Specification for Deformed and Plain Billet-Steel Bars for Concrete Reinforcement; 1996a.

N. ASTM C 33 - Standard Specification for Concrete Aggregates; 1999a.

O. ASTM C 39/C 39M - Standard Test Method for Compressive Strength of Cylindrical

Concrete Specimens; 1999.

P. ASTM C 94/C 94M - Standard Specification for Ready-Mixed Concrete; 2000.

Q. ASTM C 150 - Standard Specification for Portland Cement; 1999a.

R. ASTM C 171 - Standard Specification for Sheet Materials for Curing Concrete; 1997a.

S. ASTM C 173 - Standard Test Method for Air Content of Freshly Mixed Concrete by the Volumetric Method; 1994a.

T. ASTM C 260 - Standard Specification for Air-Entraining Admixtures for Concrete; 1998.

U. ASTM C 309 - Standard Specification for Liquid Membrane-Forming Compounds for Curing Concrete; 1998a.

V. ASTM C 494/C 494M - Standard Specification for Chemical Admixtures for Concrete; 1999a.

W. ASTM C 618 - Standard Specification for Coal Fly Ash and Raw or Calcined Natural Pozzolan for Use as a Mineral Admixture in Concrete; 1999.

X. ASTM C 685 - Standard Specification for Concrete Made by Volumetric Batching and Continuous Mixing; 1998a.

Y. ASTM C 881 - Standard Specification for Epoxy-Resin-Base Bonding Systems for Concrete; 1999.

Z. ASTM C 1059 - Standard Specification for Latex Agents for Bonding Fresh to Hardened Concrete; 1999.

AA. ASTM C 1107 - Standard Specification for Packaged Dry, Hydraulic-Cement Grout (Non-shrink); 1999.

AB. ASTM E 1155 - Standard Test Method for Determining F(F) Floor Flatness and F(L) Floor Levelness Numbers; 1996.

1.04 SUBMITTALS

A. Concrete mixture proportions shall be determined by the Contractor and submitted for review. The concrete mixture quantities of all ingredients per cubic meter yard and nominal maximum coarse aggregate size that will be used in the manufacture of each quality of concrete shall be stated. Proportions shall indicate the mass of cement, pozzolan and ground granulated blast-furnace (GGBF) slag when used, and water; the mass of aggregates in a saturated surface-dry condition; and the quantities of admixtures. The submission shall be accompanied by test reports from a laboratory complying with ASTM C 1077 which show that proportions thus selected will produce concrete of the qualities indicated. No substitution shall be made in the source or type of materials used in the work without additional tests to show the quality of the new material and concrete are satisfactory.

B. The curing medium and methods to be used shall be submitted for review and approval.

C. If concrete is to be placed under cold-weather conditions, the proposed materials, methods, and protection shall be submitted for approval.

D. If concrete is to be placed under hot-weather conditions, the proposed material and methods shall be submitted for review and approval.

E. Aggregate quality tests shall be submitted at least 30 days prior to start of concrete placement.

F. The results of the initial mixer uniformity tests shall be submitted at least 5 days prior to the initiation of placing.

G. Cementitious materials, including cement and pozzolan, (and Ground Granulated Blast Furnace Slag) will be accepted on the basis of the manufacturer's certification of compliance, accompanied by mill test reports that materials meet the requirements of the specification under which they are furnished. Certification and mill test reports shall be form samples taken from the particular lot furnished. No cementitious materials shall be used until notice of acceptance has been given by the Contracting Officer. Cementitious material will be subject to check testing from samples obtained at the source, at transfer points, or at the project site, as scheduled by the Contracting Officer, and such sampling will be by or under the supervision of the Owner at its expense. Material not meeting specifications shall be promptly removed from the site of work.

H. Air-Entraining Admixture shall be certified for compliance with all specification requirements.

I. Other chemical admixtures shall be certified for compliance withal all specification requirements.

J. Epoxy Resin and Latex Bonding Compound shall be certified for compliance with all specification requirements.

K. Descriptive literature of the Non-shrink Grout proposed for use shall be furnished together with a certificate form the manufacturer stating that it is suitable for the application or exposure for which it is being considered.

1.05 PRE-CONCRETE CONFERENCE

A. General: At least 15 days prior to submittal of design mixes, conduct a meeting to review proposed methods of concrete construction to achieve the required results.

B. Agenda: Includes but is not limited to:

1. Submittals.

2. Coordination of work.

3. Availability of material.

4. Concrete mix design including admixtures.

5. Methods of placing, finishing, and curing.

6. Finish criteria required to obtain required flatness and levelness.

7. Timing of floor finish measurements.

8. Material inspection and testing.

C. Attendees: Include but not limited to representatives of Contractor; subcontractors involved in supplying, conveying, placing, finishing, and curing concrete; Resident Engineer; and Consulting Engineer.

D. Minutes of the meeting: Contractor shall take minutes and type and distribute the minutes to attendees within five days of the meeting.

PART 2 PRODUCTS

2.01 MATERIALS

A. Portland Cement: ASTM C150 Type I, I-P, or II.

B. Fly Ash: ASTM C618, Class C or F including supplementary optional requirements relating to reactive aggregates and alkalis, and loss on ignition (LOI) not to exceed 5 percent.

C. Coarse Aggregate: ASTM C33.

1. Size #57

2. Coarse aggregate for applied topping, encasement of steel columns, and metal pan stair fill shall be Size 789.

3. Maximum size of coarse aggregates not more than one-fifth of narrowest dimension between sides of forms, one-third of depth of slabs, nor three-fourth of minimum clear spacing between reinforcing bars.

D. Fine Aggregate: ASTM C33. Fine aggregate for applied concrete floor topping shall pass a No. 4 sieve, 10 percent maximum shall pass a No. 100 sieve.

E. Mixing Water: Fresh, clean – potable or reclaimed.

F. Admixtures:

1. Water Reducing Admixture: ASTM C494, Type A and not contain more chloride ions than are present in municipal drinking water.

2. Water Reducing, Retarding Admixture: ASTM C494, Type D and not contain more chloride ions than are present in municipal drinking water.

3. High-Range Water-Reducing Admixture (Superplasticizer): ASTM C494, Type F or G, and not contain more chloride ions than are present in municipal drinking water.

4. Non-Corrosive, Non-Chloride Accelerator: ASTM C494, Type C or E, and not contain more chloride ions than are present in municipal drinking water. Admixture manufacturer must have long-term non-corrosive test data from an independent testing laboratory of at least one year duration using an acceptable accelerated corrosion test method such as that using electrical potential measures.

5. Air Entraining Admixture: ASTM C260.

6. Calcium Nitrite corrosion inhibitor: ASTM C494 Type C.

7. Concrete Waterproofing Admixture shall be included for the designated structures as specified in Section 07 16 16.

8. Prohibited Admixtures: Calcium chloride, thiocyanate or admixtures containing more than 0.05 percent chloride ions are not permitted.

9. Certification: Written conformance to the requirements above and the chloride ion content of the admixture prior to mix design review.

R. Expansion Joint Filler: ASTM D1751.

S. Sheet Materials for Curing Concrete: ASTM C171.

T. Liquid Membrane-forming Compounds for Curing Concrete: ASTM C309, Type I, with fugitive dye. Compound shall be compatible with scheduled surface treatment, such as paint and resilient tile, and shall not discolor concrete surface.

U. Non-Shrink Grout:

1. ASTM C1107, pre-mixed, produce a compressive strength of at least 2500 psi at three days and 5000 psi at 28 days. Furnish test data from an independent laboratory indicating that the grout when placed at a fluid consistency shall achieve 95 percent bearing under a 4 foot by 4 foot base plate.

2. Where high fluidity or increased placing time is required, furnish test data from an independent laboratory indicating that the grout when placed at a fluid consistency shall achieve 95 percent under an 18 inch by 36 inch base plate.

2.02 CONCRETE MIX DESIGN

A. Mix Designs: Proportioned in accordance with Section 5.3, "Proportioning on the Basis of Field Experience and/or Trial Mixtures" of ACI 318. The concrete compressive strength Fc' shall be 4,000 psi unless otherwise indicated on the drawings.

1. If trial mixes are used, make a set of at least 4 cylinders in accordance with ASTM C192 for test purposes from each trial mix; test two for compressive strength at 7 days and at 28 days.

2. Submit a report of results of each test series, include a detailed listing of the proportions of trial mix or mixes, including cement, fly ash, admixtures, weight of fine and coarse aggregate per cubic yard measured dry rodded and damp loose, specific gravity, fineness modulus, percentage of moisture, air content, water-cement -fly ash ratio, and consistency of each cylinder in terms of slump. Include dry unit weight of lightweight structural concrete.

3. Prepare a curve showing relationship between water-cement-fly ash ratio at 7-day and 28-day compressive strengths. Plot each curve using at least three specimens.

4. If the field experience method is used, submit complete standard deviation analysis.

B. After approval of mixes no substitution in material or change in proportions of approval mixes may be made without additional tests and approval of Resident Engineer or as specified. Making and testing of preliminary test cylinders may be carried on pending approval of cement and fly ash, providing Contractor and manufacturer certify that ingredients used in making test cylinders are the same. Resident Engineer may allow Contractor to proceed with depositing concrete for certain portions of work, pending final approval of cement and fly ash and approval of design mix.

C. Cement Factor: Maintain minimum cement factors in Table I regardless of compressive strength developed above minimums. Fly ash may be substituted for up to 20 percent of the minimum cement factor at option of Contractor, except fly ash may not be used in concrete designated as architectural concrete.

TABLE I - CEMENT AND WATER FACTORS FOR CONCRETE

Concrete Strength	Water/Cement Ratio
Min. 28 Day Comp. Str. psi	Max. Water Cement Ratio
4000[1,]	0.45

1. If trial mixes are used, the proposed mix design shall achieve a compressive strength 1200 psi in excess of f'c.

D. Maximum Slump: Maximum slump, as determined by ASTM C143 with tolerances as established by ASTM C94, for concrete to be vibrated shall be as shown in Table II.

TABLE II - MAXIMUM SLUMP, INCHES

Type of Construction	Normal Weight Concrete
Reinforced Footings and Substructure Walls	3 inches
Slabs, Beams, Reinforced Walls, and Building Columns	4 inches

E. Slump may be increased by the use of the approved high-range water-reducing admixture (superplasticizer). Tolerances as established by ASTM C94. Concrete containing the high-range-water-reducing admixture may have a maximum slump of 9 inches. The concrete shall arrive at the job site at a slump of 2 inches to 3 inches. This should be verified, and then the high-range-water-reducing admixture added to increase the slump to the approved level.

F. Air-Entrainment: Air-entrainment of normal weight concrete shall conform to Table III. Air-entrainment of lightweight structural concrete shall conform to Table IV. Determine air content by either ASTM C173 or ASTM C231.

TABLE III - TOTAL AIR CONTENT

Location	Air Content
Concrete Exposed to Weather	4.0% to 6.0%

G. Concrete slabs placed at air temperatures below 50 degrees Fahrenheit use non-corrosive, non-chloride accelerator. Concrete required to be air entrained use approved air entraining admixture. Pumped concrete, synthetic fiber concrete, architectural concrete, concrete required to be watertight, and concrete with a water/cement ratio below 0.50 use high-range water-reducing admixture (superplasticizer).

H. Durability: Use air entrainment for exterior exposed concrete subjected to freezing and thawing and other concrete shown or specified. Air content as shown in Table III.

I. Enforcing Strength Requirements: Test as specified in Section 01 45 23, TESTING LABORATORY SERVICES, during the progress of the work. Seven-day tests may be used as indicators of 28-day strength. Average of any three 28-day consecutive strength tests of laboratory-cured specimens representing each type of concrete shall be equal to or greater than specified strength. No single test shall be more than 500 psi below specified strength. Interpret field test results in accordance with ACI 214. Should strengths shown by test specimens fall below required values, Resident Engineer may require any one or any combination of the following corrective actions, at no additional cost to the Owner:

1. Require changes in mix proportions by selecting one of the other appropriate trial mixes or changing proportions, including cement content, of approved trial mix.

2. Require additional curing and protection.

3. If five consecutive tests fall below 95 percent of minimum values given in Table I or if test results are so low as to raise a question as to the safety of the structure, Resident Engineer may direct Contractor to take cores from portions of the structure. Use results from cores tested by the Contractor retained testing agency to analyze structure.

4. If strength of core drilled specimens falls below 85 percent of minimum value given in Table I, Resident Engineer may order load tests, made by Contractor retained testing agency, on portions of building so affected. Load tests in accordance with ACI 318 and criteria of acceptability of concrete under test as given therein.

5. Concrete work, judged inadequate by structural analysis, by results of load test, or for any reason, shall be reinforced with additional construction or replaced, if directed by the Resident Engineer.

PART 3 EXECUTION

3.01 PREPARATION

A. Mixing

1. All concrete shall be ready-mixed concrete and shall be mixed and delivered in accordance with the requirements of "Specifications for Ready-Mixed Concrete", ASTM C94 and ACI 318 to produce concrete with the required strength, slump and air content.

2. The concrete producer shall furnish with each load of concrete a numbered delivery ticket showing name of Contractor, name and location of project, date and time batched, truck number, number of cubic yards in load, specified strength, slump, and mix design number.

3. In the event concrete is mixed at a central batching plant, the delivery shall be arranged so that intervals between batches are kept at a minimum, and in any event not more than thirty (30) minutes. Trucks shall be in first class condition and kept in constant rotation during delivery.

4. When concrete is delivered in a truck mixer or agitator, no water from the truck water system or elsewhere shall be added after the initial introduction of mixing water for the batch, except when on arrival at the job site the slump of the concrete is less than that specified. Such additional water to bring the slump within required limits shall be injected into the mixer, provided the maximum water-cement ratio specified is not exceeded. The drum or blades shall be turned an additional 30 revolutions or more at mixing speed until the concrete is within the proper slump limits.

B. Discharge of concrete after initial batching shall be completed within 90 minutes, or before the drum has revolved 300 revolutions, whichever comes first, after the introduction of the mixing water to the cement and aggregates. In hot weather (as defined by ACI) the discharge of the concrete shall be completed within 60 minutes.

C. Maximum delivery temperature of concrete shall be 100°F. Minimum delivery temperature as follows:

Atmospheric Temperature	Minimum Concrete Temperature
30 degrees to 40 degrees F	60 degrees F
0 degrees to 30 degrees F	70 Degrees F

3.02 VAPOR BARRIER

A. Except where membrane waterproofing is required, interior concrete slab on grade shall be placed on a continuous vapor barrier as specified in Section 07 19 00.

1. Vapor barrier joints lapped 6 inches and sealed with compatible waterproof pressure-sensitive tape.

2. Patch punctures and tears.

3.03 CONSTRUCTION JOINTS

A. Unless otherwise shown, location of construction joints to limit individual placement shall not exceed 95 feet in any horizontal direction, except slabs on grade which shall have construction joints shown. Allow 48 hours to elapse between pouring adjacent sections unless this requirement is waived by Resident Engineer.

B. Locate construction joints in suspended floors near the quarter-point of spans for slabs, beams or girders, unless a beam intersects a girder at center, in which case joint in girder shall be offset a distance equal to twice width of beam. Provide keys and inclined dowels as shown. Provide longitudinal keys as shown.

C. Place concrete for columns slowly and in one operation between joints. Install joints in concrete columns at underside of deepest beam or girder framing into column.

D. Allow 2 hours to elapse after column is cast before concrete of supported beam, girder or slab is placed. Place girders, beams, grade beams, column capitals, brackets, and haunches at the same time as slab unless otherwise shown.

E. Install polyvinyl chloride or rubber water seals, as shown in accordance with manufacturer's instructions, to form continuous watertight seal. Waterstops selection shall be defined in specification section 03 10 00.

3.04 EXPANSION JOINTS

A. Clean expansion joint surfaces before installing pre-molded filler and placing adjacent concrete.

B. Where indicated install polyvinyl chloride or rubber water seals, as shown in accordance with manufacturer's instructions, to form continuous watertight seal and as specified in Section 03 10 00.

3.05 PLACING CONCRETE

A. Preparation:

1. Remove hardened concrete, wood chips, shavings and other debris from forms.

2. Remove hardened concrete and foreign materials from interior surfaces of mixing and conveying equipment.

3. Have forms and reinforcement inspected and approved by Resident Engineer before depositing concrete.

4. Provide runways for wheeling equipment to convey concrete to point of deposit. Keep equipment on runways which are not supported by or bear on reinforcement. Provide similar runways for protection of vapor barrier on coarse fill.

B. Bonding: Before depositing new concrete on or against concrete which has been set, thoroughly roughen and clean existing surfaces of laitance, foreign matter, and loose particles.

1. Preparing surface for applied topping:

a. Remove laitance, mortar, oil, grease, paint, or other foreign material by sand blasting. Clean with vacuum type equipment to remove sand and other loose material.

b. Broom clean and keep base slab wet for at least four hours before topping is applied.

c. Use a thin coat of one part Portland cement, 1.5 parts fine sand, bonding admixture; and water at a 50: 50 ratio and mix to achieve the consistency of thick paint. Apply to a damp base slab by scrubbing with a stiff fiber brush. New concrete shall be placed while the bonding grout is still tacky.

C. Conveying Concrete: Convey concrete from mixer to final place of deposit by a method which will prevent segregation. Method of conveying concrete subject to approval of Resident Engineer.

D. Placing: For special requirements see Paragraphs, HOT WEATHER and COLD WEATHER.

1. Do not place concrete when weather conditions prevent proper placement and consolidation, or when concrete has attained its initial set, or has contained its water or cement content more than 1 1/2 hours.

2. Deposit concrete in forms as near as practicable in its final position. Prevent splashing of forms or reinforcement with concrete in advance of placing concrete.

3. Do not drop concrete freely more than 10 feet for concrete containing the high-range water-reducing admixture (superplasticizer) or 5 feet for conventional concrete. Where greater drops are required, use a tremie or flexible spout (canvas elephant trunk), attached to a suitable hopper.

4. Discharge contents of tremies or flexible spouts in horizontal layers not exceeding 20 inches in thickness, and space tremies such as to provide a minimum of lateral movement of concrete.

5. Continuously place concrete until an entire unit between construction joints is placed. Rate and method of placing concrete shall be such that no concrete between construction joints will be deposited upon or against partly set concrete, after its initial set has taken place, or after 45 minutes of elapsed time during concrete placement.

6. On bottom of members with severe congestion of reinforcement, deposit 1 inch layer of flowing concrete containing the specified high-range water-reducing admixture (superplasticizer). Successive concrete lifts may be a continuation of this concrete or concrete with a conventional slump.

7. Concrete on metal deck:

a. Concrete on metal deck shall be minimum thickness shown. Allow for deflection of steel beams and metal deck under the weight of wet concrete in calculating concrete quantities for slab.

E. Consolidation: Conform to ACI 309. Immediately after depositing, spade concrete next to forms, work around reinforcement and into angles of forms, tamp lightly by hand, and compact with mechanical vibrator applied directly into concrete at approximately 18 inch intervals. Mechanical vibrator shall be power driven, hand operated type with minimum frequency of 5000 cycles per minute having an intensity sufficient to cause flow or settlement of concrete into place. Vibrate concrete to produce thorough compaction, complete embedment of reinforcement and concrete of uniform and maximum density without segregation of mix. Do not transport concrete in forms by vibration.

1. Use of form vibration shall be approved only when concrete sections are too thin or too inaccessible for use of internal vibration.

2. Carry on vibration continuously with placing of concrete. Do not insert vibrator into concrete that has begun to set.

3.06 HOT WEATHER

A. Follow the recommendations of ACI 305 or as specified to prevent problems in the manufacturing, placing, and curing of concrete that can adversely affect the properties and serviceability of the hardened concrete. Methods proposed for cooling materials and arrangements for protecting concrete shall be made in advance of concrete placement and approved by Resident Engineer.

3.07 COLD WEATHER

A. Follow the recommendations of ACI 306 or as specified to prevent freezing of concrete and to permit concrete to gain strength properly. Use only the specified non-corrosive, non-chloride accelerator. Do not use calcium chloride, thiocyantes or admixtures containing more than 0.05 percent chloride ions. Methods proposed for heating materials and arrangements for protecting concrete shall be made in advance of concrete placement and approved by Resident Engineer.

3.08 PROTECTION AND CURING

A. Conform to ACI 308: Initial curing shall immediately follow the finishing operation. Protect exposed surfaces of concrete from premature drying, wash by rain and running water, wind, mechanical injury, and excessively hot or cold temperatures. Keep concrete not covered with membrane or other curing material continuously wet for at least 7 days after placing, except wet curing period for high-early-strength concrete shall be not less than 3 days. Keep wood forms continuously wet to prevent moisture loss until forms are removed. Cure exposed concrete surfaces as described below. Other curing methods may be used if approved by Resident Engineer.

1. Liquid curing and sealing compounds: Apply by power-driven spray or roller in accordance with the manufacturer's instructions. Apply immediately after finishing. Maximum coverage 400 square feet per gallon on steel troweled surfaces and 300 square feet per gallon on floated or broomed surfaces for the curing/sealing compound.

2. Plastic sheets: Apply as soon as concrete has hardened sufficiently to prevent surface damage. Utilize widest practical width sheet and overlap adjacent sheets 2 inches. Tightly seal joints with tape.

3. Paper: Utilize widest practical width paper and overlap adjacent sheets 2 inches. Tightly seal joints with sand, wood planks, pressure-sensitive tape, mastic or glue.

3.09 REMOVAL OF FORMS

A. Remove in a manner to assure complete safety of structure after the following conditions have been met.

1. Where structure as a whole is supported on shores, forms for beams and girder sides, columns, and similar vertical structural members may be removed after 24 hours, provided concrete has hardened sufficiently to prevent surface damage and curing is continued without any lapse in time as specified for exposed surfaces.

2. Take particular care in removing forms of Architectural exposed concrete to insure surfaces are not marred or gouged, and that corners and arises are true, sharp and unbroken.

B. Control Test: Use to determine if the concrete has attained sufficient strength and curing to permit removal of supporting forms. Cylinders required for control tests taken in accordance with ASTM C172, molded in accordance with ASTM C31, and tested in accordance with ASTM C39. Control cylinders cured and protected in the same manner as the structure they represent. Supporting forms or shoring not removed until strength of control test cylinders have attained at least 70 percent of minimum 28-day compressive strength specified. For post-tensioned systems supporting forms and shoring not removed until stressing is completed. Exercise care to assure that newly unsupported portions of structure are not subjected to heavy construction or material loading.

3.10 CONCRETE SURFACE PREPARATION

A. Metal Removal: Unnecessary metal items cut back flush with face of concrete members.

B. Patching: Maintain curing and start patching as soon as forms are removed. Do not apply curing compounds to concrete surfaces requiring patching until patching is completed. Use cement mortar for patching of same composition as that used in concrete. Use white or gray Portland cement as necessary to obtain finish color matching surrounding concrete. Thoroughly clean areas to be patched. Cut out honeycombed or otherwise defective areas to solid concrete to a depth of not less than 1 inch. Cut edge perpendicular to surface of concrete. Saturate with water area to be patched, and at least 6 inches surrounding before placing patching mortar. Give area to be patched a brush coat of cement grout followed immediately by patching mortar. Cement grout composed of one part Portland cement, 1.5 parts fine sand, bonding admixture, and water at a 50:50 ratio, mix to achieve consistency of thick paint. Mix patching mortar approximately 1 hour before placing and remix occasionally during this period without addition of water. Compact mortar into place and screed slightly higher than surrounding surface. After initial shrinkage has occurred, finish to match color and texture of adjoining surfaces. Cure patches as specified for other concrete. Fill form tie holes which extend entirely through walls from unexposed face by means of a pressure gun or other suitable device to force mortar through wall. Wipe excess mortar off exposed face with a cloth.

C. Upon removal of forms, clean vertical concrete surface that is to receive bonded applied cementitious application with wire brushes or by sand blasting to remove unset material, laitance, and loose particles to expose aggregates to provide a clean, firm, granular surface for bond of applied finish.

3.11 CONCRETE SLAB FINISHES

A. General

1. Finish slab concrete per the requirements of ACI 302.1R.

2. Use manual screeds, vibrating screeds, or roller compacting screeds to place concrete level and smooth.

3. Do not use “jitterbugs” or other special tools designed for purpose of forcing coarse aggregate away from surface and allowing layer of mortar, which will be weak and cause surface cracks or delamination, to accumulate.

4. Do not dust surfaces with dry materials.

5. Round off edges of slabs with steel edging tool, except where cove finish is shown. Steel edging tool radius shall be 1/4 inch for slabs subject to wheeled traffic.

B. Type S-1 (Bull Float Finish):

1. Finish slab to receive fill and mortar setting bed by screeding with straightedges to bring surface to required finish plane.

2. Wood float finish to compact and seal surface.

3. Remove laitance and leave surface clean.

4. Coordinate with other finish procedures.

C. Type S-2 (Steel Troweled Finish):

1. Finish by screeding and floating with straightedges to bring surfaces to required finish elevation. Use evaporation retardant.

2. While concrete is still green, but sufficiently hardened to bear a person's weight without deep imprint, wood float to true, even plane with no coarse aggregate visible.

3. Use sufficient pressure on wood floats to bring moisture to surface.

4. After surface moisture has disappeared, hand trowel concrete to produce smooth, impervious surface, free from trowel marks.

5. Burnish surface with an additional troweling. Final troweling shall produce ringing sound from trowel.

6. Do not use dry cement or additional water during troweling, nor will excessive troweling be permitted.

7. Power Finishing:

a. Approved power machine may be used in lieu of hand finishing in accordance with directions of machine manufacturer.

b. Do not use power machine when concrete has not attained necessary set to allow finishing without introducing high and low spots in slab.

D. Type S-4 (Broomed Finish):

1. Finish as specified for Type S-1 floor finish, except omit final troweling and finish surface by drawing fine-hair broom lightly across surface.

2. Broom in same direction and parallel to expansion joints, or, in the case of inclined slabs, perpendicular to slope, except for round roof slab, broom surface in radial direction.

3.12 CONCRETE SLAB TOLERANCES

A. Concrete Thickness Tolerances shall be 3/8 inch greater or 1/4 inch less than specified as specified in ACI code section 117.

B. Concrete Level Tolerances shall be F_F25 as defined in ACI code section 117 or 1/4 inch gap under an unleveled 10 ft. straightedge.

C. Slope slabs to floor drain and gutter, and shall adequately drain regardless of tolerances.

3.13 CONCRETE WALL FINISHES

A. Type W-1 (Ordinary Wall Finish):

1. Point & Patch tie holes.

2. Knock off projections.

3. Patch defective areas.

B. Type W-2 (Smooth Wall Finish):

1. Point & Patch tie holes.

2. Grind off projections, fins, and rough spots.

3. Patch defective areas and repair rough spots resulting from form release agent failure or other reasons to provide smooth uniform appearance.

C. Type W-4 (Smooth Rubbed Wall Finish):

1. Only water curing will be permitted on walls being rubbed.

2. Patch and repair defective areas as specified for Type W-2.

3. Perform rubbing while green concrete can be physically worked and smoothed without adding other materials, if structurally possible, the day following placement. Finish no later than 3 days after placement has been completed.

4. Remove forms at such a rate that all finishing, form tie filling, fin removal, and patching can be completed on same day forms are removed while curing wall.

5. After pointings have set sufficiently to permit working on surface, thoroughly saturate entire surface with water for period of 3 hours and rub until uniform surface is obtained.

6. Rub either by hand with carborundum stone of medium-coarse grade or abrasive of equal quality, or mechanically operated carborundum stone.

7. Mechanically operated carborundum stones shall be approved by Engineer before concrete finishing.

8. No cement grout, other than cement paste drawn from the concrete itself by the rubbing process shall be used.

9. Finish Paste Formed by Rubbing by Either Brushing or Floating as Follows:

   a. Brushing:

      i. Carefully strike with clean brush.

      ii. Brush in long direction of surface being finished.

   b. Floating:

      i. Spread uniformly over surface and allow to reset.

      ii. Finish by floating with canvas, carpet face, or cork float, or rub down with dry burlap.

9. Continue water curing of wall during finishing operation in areas not being rubbed.

10. Move water curing onto rubbed areas as soon as water will not erode rubbed surface.

E. Type W-5 (Cementitious water-proof coating)

1. Patch and repair defective areas as specified for Type W-2.

2. Substrate must be clean, sound, and free of surface contaminants. Remove dust, laitance, grease, oils, curing compounds, form release agents and all foreign particles by mechanical means. An open-textured, sandpaper-like substrate is ideal. Substrate shall be in accordance with ICRI Guideline No. 03732 for coatings and fall within CSP4. All surfaces must be saturated surface dry (SSD), with no standing water at time of application.

3. Apply cementitious water proof coating identified as Thoroseal by ChemRex, Inc., Sealcoat 1000 by Dayton Superior, or SikaTop 144 by the Sika Corporation (contractor selection) per the manufacturer's recommendations and as described below:

   a. Thoroseal by ChemRex Inc.

      1. Prepare a mixing solution of 1 part Acryl 60 and 3 parts water.

      2. Mix one 50-pound bag of Thoroseal with 8 quarts of mixing solution from item 1 above.

      3. 1st coat shall be applied at a rate of 225 sq. feet per 50lb bag.

      4. 2nd coat shall be applied at a rate of 450 sq. feet per 50lb bag.

   b. Sealcoat 1000 by Dayton Superior

      1. Prepare a mixing solution of 1 part Ad Bond (J-40) to 3 parts clean water.

2. Mix one 50lb bag of Sealcoat 1000 with 8 quarts of mixing solution from item 1 above.

3. 1st coat shall be applied at a rate of 225 sq. feet per 50lb bag.

4. 2nd coat shall be applied at a rate of 450 sq. feet per 50lb bag.

c. Sikatop 144 by Sika Corporation

1. Mix components A and B at a 1:1.647 by weight ratio

2. 1st coat 100 sq. feet per gallon

3. 2nd coat 150 sq. feet per gallon

3.14 CONCRETE WALL TOLERANCES

A. Concrete Wall Tolerances shall be as defined in specification section “03 10 00 Concrete Forming and Accessories” and as indicated in ACI code section 301.

3.15 BEAM AND COLUMN FINISHES (B=Beam, C=Column)

A. Type B-1: Match wall Type W-1.

B. Type B-2: Match wall Type W-2.

C. Type B-3: Match wall Type W-3

D. Type B-4: Match wall Type W-4

E. Type B-5: Match wall Type W-5

F. Type C-1: Match wall Type W-1.

G. Type C-2: Match wall Type W-2.

H. Type C-3: Match wall Type W-3

I. Type C-4: Match wall Type W-4

J. Type C-5: Match wall Type W-5.

3.16 CONCRETE BEAM AND COLUMN TOLERANCES

A. Concrete Beam and Column Tolerances shall be as defined in specification section “03 10 00 Concrete Forming and Accessories” and as indicated in ACI code section 301.

3.17 BACKFILL AGAINST WALLS

A. Do not backfill against walls until concrete has obtained specified 28 day compressive strength.

B. Place backfill simultaneously on both sides of wall, where required, to prevent differential pressures.

3.18 FIELD QUALITY CONTROL

A. An independent testing agency will perform field quality control tests, as specified in Section 01 40 00.

B. Provide free access to concrete operations at project site and cooperate with appointed firm.

C. Submit proposed mix design of each class of concrete to inspection and testing firm for review prior to commencement of concrete operations.

D. Tests of concrete and concrete materials may be performed at any time to ensure conformance with specified requirements.

E. Compressive Strength Tests: ASTM C39/C39M. For each test, mold and cure three concrete test cylinders. Obtain test samples for every 100 cu yd or less of each class of concrete placed.

F. Take one additional test cylinder during cold weather concreting, cured on job site under same conditions as concrete it represents.

G. Perform one slump test for each set of test cylinders taken, following procedures of ASTM C143/C143M.

H. Concrete cylinder tests:
   1. During construction, prepare test cylinders for compressive strength testing, using 6-inch diameter by 12-inches long single use molds, complying with ASTM C31.
      a. Make a set of three test cylinders from each pour of 50 cubic yards or less, plus one additional set of cylinders for each additional 50 cubic yards or fraction thereof.
      b. Identify each and tag cylinder as to date of pour and location of concrete which it represents.
      c. Deliver cylinders to testing lab selected by the Owner.
      d. Cost for preparation and delivery of cylinders shall be borne by the Contractor. Cost for testing cylinders will be borne by the Owner.
   2. Should strengths shown by test cylinders fail to meet specified strengths for the concrete represented, then:
      a. Engineer shall have the right to require changes in the mix proportions as he deems necessary on the remainder of the work.
      b. Additional curing of those portions of the structure represented by the failed test cylinders shall be accomplished as directed by the Engineer.
      c. Upon failure of the additional curing to bring the concrete up to specified strength requirements, strengthening or replacement of those portions of the structure shall be as directed by the Engineer.
      d. The Engineer may require additional testing of concrete in question by either non-destructive methods such as the Swiss Hammer, Windsor Probe or Ultrasonics or by coring and testing the concrete in question in accordance with ASTM C42. Such testing shall be performed at no additional cost to the Owner.

I. Other field concrete tests:
   1. Slump tests: Either the Engineer or a testing laboratory representative will make slump tests of concrete as it is discharged from the mixer.
      a. Slump test may be made on any concrete batch at the discretion of the Engineer.
      b. Failure to meet specified slump requirements (prior to addition of any superplasticizers) will be cause for rejection of the concrete.
   2. Temperature: The concrete temperature may be checked at the discretion of the Engineer.
   3. Entrained air: Air content of the concrete will be checked by a representative of the testing laboratory at the discretion of the Engineer.

J. Coordination of laboratory services: The Contractor shall be responsible for coordination of laboratory services.
   1. Maintain a log recording quantities of each type of concrete placed, date and location of pour.
   2. Inform the testing laboratory of locations and dates of concrete placement and other information as required to be identified in the laboratory's test reports.

K. Tests required because of extensive honeycombing, poor consolidation of the concrete or any suspected deficiency in the concrete will be paid for by the Contractor.

L. Dimensional tolerances:
   1. Dimensional tolerances for allowable variations from dimensions or locations of concrete work, including the locations of embedded items shall be as given in ACI 301.
   2. Where anchor bolts or other embedded items are required for equipment installation, comply with the manufacturer's tolerances if more stringent than those stated in ACI 301.

M. Watertight concrete:
   1. All liquid containing structures, basements or pits below grade shall be watertight.
   2. Any visible leakage or seepage shall be repaired as instructed by the Engineer at no expense to the Owner.
   3. Where physical evidence of honeycombing, cold joints or other deficiencies which may impair the watertightness of a structure exists, the Engineer may at his discretion call for leak testing of the structure.
      a. Fill the structure with water and allow to stand for not less than forty-eight (48) hours.
      b. Make repairs on the structure until all visible leaks are sealed and the leakage rate of the water in the structure is less than 0.1-percent of the volume held in the structure per day.
      c. The cost of testing and repairs shall be performed at no expense to the Owner.

N. Concrete which fails to meet strength requirements, dimensional tolerances, watertightness criteria, or is otherwise deficient due to insufficient curing, improper consolidation or physical damage shall be replaced or repaired as instructed by the Engineer at no expense to the Owner.

3.19 DEFECTIVE CONCRETE

A. Test Results: The testing agency shall report test results in writing to Owner and within twenty-four (24) hours of test.

B. Defective Concrete: Concrete not conforming to required lines, details, dimensions, tolerances or specified requirements.

C. Repair or replacement of defective concrete will be determined by the Engineer. The cost of additional testing shall be borne by Contractor when defective concrete is identified.

D. Do not patch, fill, touch-up, repair, or replace exposed concrete except upon express direction of Engineer for each individual area.

3.20 MEASUREMENT AND PAYMENT

A. The payment will be made at the unit price “cubic yard” as stated in the Bid Form for Cast-in-Place Concrete.

END OF SECTION

SECTION 03 40 00

PRECAST CONCRETE

PART 1 GENERAL

1.01 SECTION INCLUDES

A. Lintels and bond beams.

B. Wetwells

C. Utility Vaults

D. Manholes

E. Headwalls

1.02 RELATED SECTIONS

A. 03 30 00 - Cast-In Place Concrete

1.03 REFERENCES

A. ACI 318 - Building Code Requirements for Reinforced Concrete and Commentary; American Concrete Institute International; 2014.

B. ASTM A 36/A 36M - Standard Specification for Carbon Structural Steel; 1997a.

C. ASTM A 153/A 153M - Standard Specification for Zinc Coating (Hot-Dip) on Iron and Steel Hardware; 1998.

D. ASTM A 185 - Standard Specification for Steel Welded Wire Fabric, Plain, for Concrete Reinforcement; 1997.

E. ASTM A 416/A 416M - Standard Specification for Steel Strand, Uncoated Seven-Wire for Prestressed Concrete; 1998.

F. ASTM A 497 - Standard Specification for Steel Welded Wire Fabric, Deformed, for Concrete Reinforcement; 1997

G. ASTM A 615/A 615M - Standard Specification for Deformed and Plain Billet-Steel Bars for Concrete Reinforcement; 1996a.

H. ASTM A 666 - Standard Specification for Annealed or Cold-Worked Austenitic Stainless Steel Sheet, Strip, Plate, and Flat Bar; 1999.

I. ASTM A 767/A 767M - Standard Specification for Zinc-Coated (Galvanized) Steel Bars for Concrete Reinforcement; 1997.

J. ASTM C 150 - Standard Specification for Portland Cement; 1999a.

K. AWS D1.1 - Structural Welding Code - Steel; American Welding Society; 2000.

L. AWS D1.4 - Structural Welding Code - Reinforcing Steel; American Welding Society; 1998.

M. PCI MNL-116S - Manual for Quality Control for Plants and Production of Precast and Prestressed Concrete Products; Precast/Prestressed Concrete Institute; 2013, Tenth Edition.

N. PCI MNL-120 - PCI Design Handbook - Precast and Prestressed Concrete; Precast/Prestressed Concrete Institute; 1999.

O. PCI MNL-123 - Design and Typical Details of Connections for Precast and Prestressed Concrete; Precast/Prestressed Concrete Institute; 1988, Second Edition.

1.04 DESIGN REQUIREMENTS

A. Size components to withstand design loads in a restrained condition as follows:

1. Horizontal Assembly: 150 psf live and dead loads.

2. Vertical Assembly: 20 psf wind load.

3. As shown on the drawings.

B. Maximum Allowable Deflection: 1/180 span.

C. Design members exposed to the weather to provide for movement of components without damage, failure of joint seals, undue stress on fasteners or other detrimental effects, when subject to seasonal or cyclic day/night temperature ranges.

D. Design system to accommodate construction tolerances, deflection of other building structural members and clearances of intended openings.

E. Shall be manufactured in accordance with Prestressed Concrete Institute's Manual 116 Manual for quality control for plans and production of Precast, prestressed concrete products and SC D.O.T. Standard Specifications.

1.05 SUBMITTALS

A. See Section 01 30 00 - Administrative Requirements, for submittal procedures.

B. Product Data: Indicate standard component configurations, design loads, deflections, cambers, and bearing requirements.

C. Shop Drawings: Indicate layout, unit locations, fabrication details, unit identification marks, reinforcement, connection details, support items, dimensions, openings, and relationship to adjacent materials. Indicate design loads, deflections, cambers, bearing requirements, and special conditions.

D. Samples: Submit two panels, 24 x 24 inches (610 x 610 mm) in size, illustrating surface finish treatment.

E. Design Data: Submit design data reports indicating calculations for loadings and stresses of fabricated, designed framing.

1.06 QUALITY ASSURANCE

A. Perform work of this section in accordance with requirements of PCI MNL-116S, PCI MNL-120, and PCI MNL-123.

B. Fabricator Qualifications: Company specializing in manufacturing products specified in this section, with not less than three years of documented experience.

C. Erector Qualifications: Company specializing in erecting products of this section with minimum five (5) years of documented experience.

D. Design precast concrete members under direct supervision of a Professional Structural Engineer experienced in design of precast concrete and licensed in the State of South Carolina.

E. Welder: Qualified within previous 12 months in accordance with AWS D1.1 and AWS D1.4.

1.07 REGULATORY REQUIREMENTS

Conform to ACI 318 for design load and construction requirements applicable to work of this section.

1.08 PRE-INSTALLATION MEETING

A. Convene a pre-installation conference one week prior to commencing work of this section.

B. Instruct others when field cutting of required openings are 10 inches (254 mm) and smaller.

1.09 DELIVERY, STORAGE AND HANDLING

A. Handle precast members in position consistent with their shape and design. Lift and support only from support points.

B. Lifting or Handling Devices: Capable of supporting member in positions anticipated during manufacture, storage, transportation, and erection.

C. Protect members to prevent staining, chipping, or spalling of concrete.

D. Mark each member with date of production and final position in structure.

1.10 PROJECT/SITE CONDITIONS

Coordinate the work of framing components not pre-tensioned but associated with the work of this section.

PART 2 PRODUCTS

2.01 MANUFACTURERS

A. Precast Concrete:

1. Sherman Precast.

2. Tindall Concrete Products.

3. Hanson

4. Approved Equal.

2.02 MATERIALS

A. Cement: White Portland, conforming to ASTM C 150, Type I.

B. Aggregate, Sand, Water, Admixtures: Determined by precast fabricator as appropriate to design requirements and PCI MNL-116S.

2.03 REINFORCEMENT

A. Tensioning Steel Tendons: ASTM A 416/A 416M, Grade 250 (1725); seven-wire stranded steel cable; low-relaxation type; full length without splices; uncoated.

B. Reinforcing Steel: ASTM A 615/A 615M Grade 60 (420).

1. Plain billet-steel bars.

2. Unfinished.

3. Shop fabricated and bent cold.

C. Welded Steel Wire Fabric: ASTM A 185 plain type; in flat sheets; unfinished.

2.04 ACCESSORIES

A. Connecting and Supporting Devices: Plates, angles, items cast into concrete, and inserts conforming to PCI MNL-123, and as follows:

1. Material: Carbon steel conforming to ASTM A 36/A 36M.

2. Finish: Prime painted, except where device surfaces will be in contact with concrete or will require field welding.

B. Grout:

1. Non-shrink, non-metallic, minimum yield strength of 10,000 psi (69 MPa) at 28 days.

2. Epoxy.

C. Bearing Pads: High density plastic, Vulcanized elastomeric compound molded to size, Neoprene (Chloroprene), or Tetrafluoroethylene (TFE); Shore A Durometer; 1/8 inch (3 mm) thick, smooth both sides.

D. Bolts, Nuts and Washers: High strength steel type recommended for structural steel joints.

2.05 FABRICATION

A. Fabrication procedure to conform to PCI MNL-116S.

B. Maintain plant records and quality control program during production of precast members. Make records available upon request.

C. Ensure reinforcing steel, anchors, inserts, plates, angles, and other cast-in items are embedded and located as indicated on shop drawings.

D. Tension reinforcement tendons as required to achieve design load criteria.

E. Provide required openings with a dimension larger than 10 inches (250 mm) and embed accessories provided under other sections of the specifications, at indicated locations.

2.06 FINISHES

A. Ensure exposed-to-view finish surfaces of precast concrete members are uniform in color and appearance.

B. Cure members under identical conditions to develop required concrete quality, and minimize appearance blemishes such as non-uniformity, staining, or surface cracking.

C. Architectural Finish: Surface holes or bubbles over 1/4 inch (6 mm) filled with matching cementitious paste, fins or protrusions removed and surface ground smooth.

D. Precast manufacturer shall coat inside of all wet well structures and receiving manholes (manhole force main discharges into) with two-component, self-priming, chemically cured, coal tar epoxy protective coating.

2.07 FABRICATION TOLERANCES

A. Conform to PCI MNL-116S.

B. Maximum Variation from Nominal Dimension: 1 inch (25 mm).

C. Maximum Variation from Intended Camber: 5/8 inch (15 mm).

D. Maximum Out of Square: 1/8 inch/10 feet (3 mm/3 m), non-cumulative.

E. Maximum Misalignment of Anchors, Inserts, Openings: 1/8 inch (3 mm).

F. Maximum Bowing of Members: Length of Bow/ 360.

2.08 SOURCE QUALITY CONTROL AND TESTS

A. Section 01 40 00 - Quality Requirements

B. Test samples in accordance with applicable ASTM standard.

PART 3 EXECUTION

3.01 EXAMINATION

A. Verify that site conditions are ready to receive work and field measurements are as shown on shop drawings.

3.02 PREPARATION

A. Prepare support equipment for the erection procedure, temporary bracing, and induced loads during erection.

3.03 WETWELLS, UTILITY VAULTS AND MANHOLES

A. Concrete bases may be precast or cast-in-place. The concrete base of precast and cast-in-place structures shall be placed on an (eight) 8-inch No. 57 stone mat or as shown on the drawings. Each precast section shall have not more than two holes for the purpose of handling and laying. These holes shall be tapered and shall be plugged with rubber stoppers or mortar installation. Brick or concrete ring to support cover shall be a minimum of 3 inches high but not more than 18 inches high.

B. Openings larger than 1-1/2 inches in diameter shall be precast into the appropriate section.

C. Any openings added during construction shall be approved by the precast manufacturer and be formed by coring. No other method for adding holes will be considered.

D. Joints of the precast sections shall be tongue and groove type. Sections shall be joined using O-ring rubber gaskets conforming to ASTM C443 or preformed mastic sealer. In

addition, the joint shall be sealed inside and out with cement mortar using one part Portland cement to two parts clean sand meeting ASTM C144. The joints shall be watertight.

E. Shaped bottoms shall be as shown on the drawings. They shall be constructed of one monolithic pour using 3000-psi concrete.

F. Brickwork required to complete the precast concrete structures shall be constructed using mortar of one part Portland cement to two parts clean sand, meeting ASTM C144 and thoroughly mixed to a workable plastic consistency.

G. Any damage to the coating during storage, handling, transportation or installation of the section shall be repaired immediately to provide complete coverage and protection per manufacturer's recommendations. Mortar joints shall receive two (2) coats of waterproofing after the section is installed and the mortar has set and dried.

3.04 ERECTION

A. Erect members without damage to structural capacity, shape, or finish. Replace or repair damaged members.

B. Align and maintain uniform horizontal and vertical joints, as erection progresses.

C. Maintain temporary bracing in place until final support is provided. Protect members from staining.

D. Provide temporary lateral support to prevent bowing, twisting, or warping of members.

E. Adjust differential camber between precast members to tolerance before final attachment.

F. Install bearing pads.

G. Level differential elevation of adjoining horizontal members with grout to maximum slope of 1:12.

H. Set vertical units dry, without grout, attaining joint dimension with lead or plastic spacers.

I. Grout underside of column bearing plates.

J. Secure units in place. Perform welding in accordance with AWS D1.1.

3.05 ERECTION TOLERANCES

A. Erect members level and plumb within allowable tolerances.

B. Conform to PCI MNL-116S.

C. Design and erect to the following tolerances:

1. Maximum Variation from Plane or Location Indicated on Drawings: 1/4 inch/10 feet and 3/8 inch in 100 feet (6 mm/3 m and 9 mm in 30 mm), non-cumulative.

2. Maximum Offset from True Alignment between Members: 1/4 inch (6 mm).

3. Maximum Variation from Dimensions Indicated on Reviewed Shop Drawings: Plus or minus 1/8 inch (3 mm).

D. Exposed Joint Dimension: 3/8 inch (9 mm) plus or minus 1/4 inch (6 mm).

E. When members cannot be adjusted to conform to design or tolerance criteria, cease work and advise the Engineer. Execute modifications as directed.

3.06 PROTECTION

A. Protect members from damage caused by field welding or erection operations.

B. Provide non-combustible shields during welding operations.

3.07 CLEANING

Clean weld marks, dirt, or blemishes from surface of exposed members.

END OF SECTION

SECTION 31 00 00

EARTHWORK

PART 1 GENERAL

1.01 SCOPE

A. This Section includes earthwork and related operations, including, but not limited to dewatering, excavating all classes of material encountered, pumping, draining and handling of water encountered in the excavations, handling, storage, transportation and disposal of all excavated and unsuitable material, construction of fills and embankments, backfilling around structures, compacting, all sheeting, shoring and bracing, preparation of subgrades, surfacing and grading and any other similar, incidental or appurtenant earthwork operations which may be necessary to properly complete the work.

B. The Contractor shall provide all services, labor, materials and equipment required for all earthwork and related operations, necessary or convenient to the Contractor, for furnishing complete work as shown on the Drawings or specified in these Contract Documents.

1.02 RELATED SECTIONS

A. Section 00 21 13 – Instructions to Bidders

B. Section 01 45 29 – Testing Laboratory Services

C. Section 31 10 00 - Site Preparation

D. Section 31 22 00 – Grading

E. Section 31 23 16 - Excavation

F. Section 31 25 00 - Erosion and Sedimentation Control

1.03 GENERAL

A. The elevations shown on the Drawings as existing are taken from the best existing data and are intended to give reasonably accurate information about the existing elevations. They are not precise and the Contractor shall become satisfied as to the exact quantities of excavation and fill required.

B. Earthwork operations shall be performed in a safe and proper manner with appropriate precautions being taken against all hazards.

C. All excavated and filled areas for structures, trenches, fills, topsoil areas, embankments and channels shall be maintained by the Contractor in good condition at all times until final acceptance by the Owner. All damage caused by erosion or other construction operations shall be repaired by the Contractor using material of the same type as the damaged material.

D. The Contractor shall control grading in a manner to prevent surface water from running into excavations. Obstruction of surface drainage shall be avoided and means shall be provided whereby storm water can be uninterrupted in existing gutters, other surface drains, or temporary drains. Free access must be provided to all fire hydrants and meters.

E. Tests for compaction and density shall be conducted by an independent testing laboratory selected in accordance with Section 01 45 29 of these Specifications.

1. The soils testing laboratory is responsible for the following:

   a. Field compaction testing shall be based on using the maximum dry density determined by the Standard Proctor Compaction Test in accordance with ASTM D 698.

   b. Determination of in-place backfill density shall be done in accordance with ASTM D 1556, “Density and unit weight of Soil In Place by the Sand-Cone Method”, ASTM D 2937, “Density of Soil In Place by the Drive-Cylinder Method” or ASTM D 2922, “Density of Soil and Soil-Aggregate In Place by Nuclear Methods (Shallow Depth)”.

   c. Field density tests for each lift; one test for each 5,000 square feet of fill or minimum one test per lift.

   d. Inspecting and testing stripped site, subgrades and proposed fill materials.

2. Contractor's duties relative to testing include:

   a. Notifying laboratory of conditions requiring testing.

   b. Coordinating with laboratory for field testing.

   c. Providing representative fill soil samples to the laboratory for test purposes. Provide 50 pound samples of each fill soil.

3. Inspection

   a. Earthwork operations, suitability of excavated materials for fill and backfill and placing and compaction of fill and backfill is subject to inspection. Engineer will observe earthwork operations.

   b. Foundations and shallow spread footing foundations are required to be inspected by an engineer to verify suitable bearing and construction.

F. All earthwork operations shall comply with the requirements of OSHA Construction Standards, Part 1926, Subpart P, Excavations, Trenching and Shoring and Subpart O, Motor Vehicles, Mechanized Equipment and Marine Operations and shall be conducted in a manner acceptable to the Engineer.

G. It is understood and agreed that the Contractor has made a thorough investigation of the surface and subsurface conditions of the site and any special construction problems which might arise as a result of nearby watercourses and floodplains. The Contractor shall be responsible for providing all services, labor, equipment and materials necessary or convenient to the Contractor for completing the work within the time specified in these Contract Documents.

H. Safety

Perform all trench excavation and backfilling activities in accordance with the Occupational Safety and Health Act of 1970 (PL 91-596), as amended. The Contractor shall pay particular attention to the Safety and Health Regulations Part 1926, Subpart P “Excavation, Trenching & Shoring” as described in OSHA publication 2226.

PART 2 PRODUCTS

2.01 SOILS CLASSIFICATIONS

Bedding materials listed here include a number of processed materials plus the soil types defined according to the Unified Soil Classification System (USCS) in ASTM D 2487, Standard Method for Classification of Soils for Engineering Purposes. (See below for description of soil classification). These materials are grouped into five broad categories according to their suitability for this application:

A. Class I - Angular, 1/4 to 1 1/2 inches (6 to 40 mm) graded stone, including such as coral, slag, cinders, crushed shells and crushed stone. Note - The size range and resulting high voids ratio of Class I material make it suitable for use to dewater trenches during pipe installation. This permeable characteristic dictates that its use be limited to locations where pipe support will not be lost by migration of other embedment materials into the Class I material. When such migration is possible, the material's minimum size range should be reduced to finer than 1/4 inch (6 mm) and the gradation properly designed to limit the size of the voids.

B. Class II - Coarse sands and gravels with maximum particle size of 1 1/2 inch (40 mm), including variously graded sands and gravels containing small percentages of fines, generally granular and non-cohesive, either wet or dry. Soil Types GW, GP, SW and SP are included in this class. Note - Sands and gravels which are clean or borderline between clean and with fines should be included. Coarse-grained soils with less than 12% but more than 5% fines are neglected in ASTM D2487 and the USCS and should be included. The gradation of Class II material influences its density and pipe support strength when loosely placed. The gradation of Class II material influences its density and pipe support strength when loosely placed. The gradation of Class II material may be critical to the pipe support and stability of the foundation and embedment if the material is imported and is not native to the trench excavation. A gradation other than well graded, such as uniformly graded or gap graded, may permit loss of support by migration into void spaces of a finer grained natural material from the trench wall and foundation.

C. Class III - Fine sand and clayey (clay filled) gravels, including fine sands, sand-clay mixtures and gravel-clay mixtures. Soil Types SM, GC, SM and SC are included in this class.

D. Class IV - Silt, silty clays and clays, including inorganic clays and silts of not to high plasticity and liquid limits. Soil Types MH, ML, CH and CL are included in this class. Note- Caution should be used in the design and selection of the degree and method of compaction for Class IV soils because of the difficulty in properly controlling the moisture content under field conditions. Some Class IV soils with medium to high plasticity and with liquid limits greater than 50% (CH, MH, CH-MH) exhibit reduced strength when wet and should only be used for bedding, haunching and initial backfill in arid locations where the pipe embedment will not be saturated by ground water, rainfall and/or exfiltration from the pipeline system. Class IV soils with low to medium plasticity and with liquid limits lower than 50% (CL, ML, CL-ML) also require careful consideration in design and installation to control moisture content but need not be restricted in use to arid locations.

E. Class V - This class includes the organic soils OL, OH and PT as well as soils containing frozen earth, debris, rocks larger than 1 1/2 inch (40 mm) in diameter and other foreign materials. These materials are not recommended for bedding, haunching or initial backfill.

DESCRIPTION OF EMBEDMENT MATERIAL CLASSIFICATIONS

SOIL CLASS	SOIL TYPE	DESCRIPTION MATERIAL CLASSIFICATION
Class I Soils *	---	Manufactured angular, granular material, 3/4 to 1-1/2 inches (6 to 40 mm) size, including materials having regional significance such as crushed stone, or rock, broken coral, crushed slag, cinders, or crushed shells.
Class II Soil **	GW	Well-graded gravels and gravel-sand mixtures, little or no fines. 50% or more retained on No. 4 sieve. More than 95% retained on No. 200 sieve. Clean.
	GP	Poorly graded gravels and gravel-sand mixtures, little or no fines. 50% or more retained on No. 4 sieve. More than 95% retained on No. 200 sieve. Clean
	SW	Well-graded sands and gravely sands, little or no fines. More than 50% passes No. 4 sieve. More than 95% retained on No. 200 sieve. Clean.
	SP	Poorly graded sands and gravelly sand, little or no fines. More than 50% passes No. 4 sieve. More than 95% retained on No. 200 sieve. Clean.
Class III Soil ***	GM	Silty gravels, gravel-sand-silt mixtures. 50% or more retained on No. 200 sieve.
	GC	Clayey gravels, gravel-sand-clay mixtures. 50% or more retained on No. 4 sieve. More than 50% retained on No. 200 sieve.
	SM	Silty sands, sand-silt mixtures. More than 50% passes No. 4 sieve. More than 50% retained on No. 200 sieve.
	SC	Clayey sands, sand-clay mixtures. More than 50% passes No. 4 sieve. More than 50% retained on No. 200 sieve.
Class IV Soils	ML	Inorganic silts, very fine sands, rock flour, silty or clayey fine sands. Liquid limit 50% or less. 50% or more passes No. 200 sieve.
	CL	Inorganic clays of low to medium plasticity, gravelly clays, sandy clays, silty clays, lean clays. Liquid limit 50% or less. 50% or more passes No. 200 sieve.
	MH	Inorganic silts, micaceous or diatomaceous fine sands or silts, elastic silts. Liquid limit greater than 50%. 50% or more passes No. 200 sieve.
	CH	Inorganic clays of high plasticity, fat clays. Liquid limit greater than 50%. 50% or more passes No. 200 sieve.
Class V Soils	OL	Organic silts and organic silty clays of low plasticity. Liquid limit 50% or less. 50% or less. 50% or more passes No. 200 sieve.
	OH	Organic clays of medium to high plasticity. Liquid limit 50% or less. 50% or more passes No. 200 sieve.

PT Peat, muck and other highly organic soils.

* Soils defined as Class I materials are not defined in ASTM D2487.
** In accordance with ASTM D2487, less than 5% pass No. 200 sieve.
*** In accordance with ASTM D2487, more than 12% pass No. 200 sieve. Soils with 5% to 12% pass No. 200 sieve fall in borderline classification, e.g. GP-GC.

2.02 FILL MATERIAL

A. Sand Fill: Material shall consist of a clean sand with a fineness modulus of 1.6 to 3.1 and containing not more than 10 percent by weight finer than No. 200 U.S. Standard Sieve.

B. Earth Fill: Material shall consist of inorganic material free of roots, cobbles and boulders and classified as SM, ML, SC, or CL by ASTM D2487-85 "Standard Methods for Classification of Soils for Engineering Purposes". Earth Fill shall also conform to the following:

1. Liquid Limit = 50 maximum

2. Plasticity Index = 20 maximum

3. Dry Unit Weight = 90 pcf minimum maximum density

2.03 UNSUITABLE SITE FILL MATERIAL

A. Material which does not conform to the above classifications (soil classification SP, SW.GM, CH, MH, OH, OL and PT) may be used as Site Fill material in areas identified on the drawings as "spoil areas", in areas with no structures and or roads and other non-critical areas.

2.04 SHEETING, BRACING AND TIMBERING

A. Sheeting, Bracing and Timbering: The Contractor shall furnish, place and maintain all sheeting, bracing and timbering required to properly support trenches and other excavations in open cut and to prevent all movement of the soil, pavement, structures, or utilities outside of the trench or pit.

1. General

a. Cofferdams and bracing design, including computations, shall be prepared before commencing construction operations. Drawings and design computations shall be signed and sealed by a professional engineer registered in the State of South Carolina. The drawings and design computations shall be submitted to the Engineer for informational purposes only.

b. Sheeting, bracing and timbering shall be so placed as to allow the work to be constructed to the lines and grades shown on the Drawings and as ordered by the Engineer.

c. If at any time the method being used by the Contractor for supporting any material or structure in or adjacent to any excavation is not reasonably safe, the Contractor shall provide additional bracing and support necessary to furnish the added degree of safety.

d. All sheeting in contact with the concrete or masonry shall be cut off as directed by the Engineer and left in place.

2. Timber: Timber may be substituted for steel sheet piling when approved by the

Engineer. Timber for shoring, sheeting or bracing shall be sound and free of large or loose knots and in good condition. Size and spacing shall be in accordance with OSHA regulations.

3. Steel Sheet Piling: Steel sheet piling shall be the continuous interlock type. The weight, depth and section modulus of the sheet piling shall be sufficient to restrain the loads of earth pressure and surcharge from existing foundations and/or live loads. Procedure for installation and bracing shall be so scheduled and coordinated with the removal of the earth that the ground under existing structures shall be protected against lateral movement at all times. The Contractor shall provide closure and sealing between sheet piling and existing facilities. Steel piling shall be removed, unless otherwise directed by the Engineer.

4. Remove bracing and sheeting in units when backfill reaches the point necessary to protect the structures and adjacent property. Leave sheeting in place when, in the opinion of the Engineer, it cannot be safely removed. Cut off sheeting left in place at least two feet below the surface.

2.05 FILTER FABRIC

A. Filter fabric associated with bedding shall be a UV stabilized, spunbonded, continuous filament, needle punched, polypropylene, nonwoven geotextile.

B. The fabric shall have an equivalent open size (EOS or AOS) of 120 - 70. The fabric shall also conform to the minimum property values listed in the following table:

Fabric Property	Unit	Test Procedure	Average Value	
			Typical	Minimum
Weight	oz/yd^2	ASTM D 3776	8.3	
Thickness	mils	ASTM D 1777	105	
Grab Strength	lbs.	ASTM D 4632	240	210
Grab Elongation	%	ASTM D 4632	>50	50
Tear Strength	lbs.	ASTM D 4533	100	85
Mullen Burst	psi	ASTM D 3786	350	320
Puncture Resistance	lbs.	ASTM D 4833	115	100
Permittivity	sec^{-1}	ASTM D 4491	1.7	
Water Permeability	cm/sec	ASTM D 4491	0.4	
Water Flow Rate	gpm/ft^2	ASTM D 4491	120	
UV Resistance (500 hrs)	%	ASTM D 4355	>85	
PH			2 – 13	

C. Filter fabric shall be Polyfelt TS 700, Trevira 1125, SuPac 7-MP or approved equal.

2.06 CONCRETE

Concrete for initial backfill or encasement shall have a compressive strength of not less than 3,000 psi, with not less than 5.5 bags of cement per cubic yard and a slump between 3 and 5-inches. Ready-mixed concrete shall be mixed and transported in accordance with ASTM C 94. Reinforcing steel shall conform to the requirements of ASTM A 615, Grade 60.

PART 3 EXECUTION

3.01 GENERAL

A. Safety: Comply with local regulations and with the provisions of the “Manual of Accident Prevention in Construction” of the Associated General Contractors of America, Inc., Occupational Safety and Health Act and all other applicable safety regulations.

B. Topsoil

1. Remove all topsoil to a depth at which subsoil is encountered, from all areas under buildings, pavements and from all areas which are to be cut to lower grades or filled.

2. With the Engineer's approval, topsoil to be used for finish grading may be stored on the site.

3. Other topsoil may be used for fill in non-critical areas with approval of the Engineer.

4. Properly dispose of all excess topsoil in the designated area.

C. Bracing and Sheeting

1. Furnish, put in place and maintain all sheeting, bracing and shoring as may be required to properly support the sides of all excavations and to prevent all movement of earth which could in any way injure the work, adjacent property or workers.

2. Properly support all excavations where necessary to conform to all pertinent rules and regulations and these Specifications, even though, such locations are not indicated on the Drawings.

3. Exercise care in the removal of sheeting, shoring, bracing and timbering to prevent collapse or caving of the excavation faces being supported and damage to the work and adjacent property.

4. Do not leave any sheeting or bracing in the trench or excavation after completion of the work, unless approved by the Engineer.

D. Obstructions

1. Remove and dispose of all boulders, sidewalks, driveways, pavement, pipes and the like, as required for the performance of the work.

2. Exercise care in excavating around catch basins, inlets and manholes so as to not disturb or damage these structures.

3. Avoid removing or loosening castings or pushing dirt into catch basins, inlets and manholes.

4. Damaged or displaced structures or casting shall be repaired, replaced and dirt entering the structures during the performance of the work shall be removed at no additional cost to the Owner.

E. Utilities to be Abandoned

1. When pipes, conduits, sewers, or other structures are removed from the trench, leaving dead ends in the ground, such ends shall be fully plugged or sealed with brick

and non-shrink grout.

2. Abandoned structures such as manholes or chambers shall be entirely removed.

3. All materials from abandoned utilities shall be removed from the site.

4. All salvageable materials shall become the property of the Owner.

5. All equipment to be salvaged is noted in the Specifications and shall be turned over to the Owner at a designated location.

F. Extra Earth Excavation

1. In case soft or excessively wet material which, in the opinion of the Engineer, is not suitable, is encountered below the final subgrade elevation of an excavation or underneath a structure, the Engineer may order the removal of this material and its replacement with crushed stone, filter fabric, or other suitable material in order to make a suitable foundation for the construction of the structure.

G. Cutting Paved Surfaces and Similar Improvements

1. Remove existing pavement as necessary for installing pipe utilities and appurtenances or as otherwise shown on the Drawings.

2. Before removing any pavement, mark the pavement neatly, paralleling pipe lines and existing street lines. Space the marks the width of the trench.

3. Break asphalt pavement along the marks using rotary saws or other suitable tools. Break concrete pavement along the marks by use of scoring with a rotary saw and breaking below the score by the use of jackhammers or other suitable tools.

4. Do not pull pavement with machines until completely broken and separated from pavement to remain.

5. Do not disturb or damage the adjacent pavement. If the adjacent pavement is disturbed or damaged, remove and replace the damaged pavement. No additional payment will be made for removing and replacing damaged adjacent pavement.

6. Remove and replace sidewalks disturbed by construction for their full width and to the nearest undisturbed joint.

7. The Contractor may tunnel under curbs that are encountered. Remove and replace any curb disturbed by construction to the nearest undisturbed joint.

3.02 EXCAVATION

A. Method

1. All excavation shall be by open cut from the surface except as indicated on the Drawings.

2. All excavations for pipe appurtenances and structures shall be made in such a manner and to such depth and width, as will give ample room for building the structures and for bracing, sheeting and supporting the sides of the excavation, for pumping and draining groundwater which may be encountered and for the removal from the excavation of all materials excavated.

3. Take special care so that the soil below the bottom of the structure to be built is left undisturbed.

B. Grades: Excavate to grades indicated on the Drawings. Where excavation grades are not indicated on the Drawings, excavate as required to accommodate installation.

C. Disposal of Excavated Material

1. Remove and properly dispose of all excavated material not needed to complete filling, backfilling and grading.

2. Dispose of excess earth and rock excavated materials at locations on-site designated by the Engineer. Off-site disposal of all other material shall be and in accordance with all requirements of federal, state, county and municipal regulations. No debris of any kind shall be deposited in any stream or body of water, or on any street. No debris shall be deposited on any private property, except by written consent of the property owner. In no case shall any material be shoved onto abutting private properties, or be buried in embankments or trenches on the Project.

3.03 EXCAVATING FOR STRUCTURES

A. Earth Excavation: Earth excavation shall include all substances to be excavated other than rock. Earth excavation for structures shall be to limits not less than two feet outside wall lines, to allow for formwork and inspection and further as necessary to permit the trades to install their work. All materials loosened or disturbed by excavation shall be removed from surfaces to receive concrete or crushed stone.

B. Excavation for Foundations: Footings and slabs on grades shall rest on undisturbed earth, rock or compacted materials to insure proper bearing.

1. Unsuitable Foundation Material: Any material, in the opinion of the Engineer, which is unsuitable for foundation shall be removed and replaced with compacted crushed stone, or with compacted fill material as directed by the Engineer. No determination of unsuitability will be made until all requirements for dewatering are satisfactorily met.

2. Pipe Trenches Beneath Structures: Where piping or conduit passes beneath footings or slabs resting on grade, trenches shall be excavated to provide a minimum 6-inch clearance from all surfaces of the pipe or conduit. The trench shall be backfilled to the base of the structure with concrete.

3. Unauthorized Excavation: Care shall be taken that excavation does not extend below bottom levels of footings or slabs on earth. Should the excavation, through carelessness or neglect, be carried below such levels, the Contractor shall fill in the resulting excess excavation with concrete under footings and compacted crushed stone or other approved material under slabs. Should excavation be carried beyond outside lines of footings such excess excavation shall be filled with concrete, or formwork shall be provided, as directed by the Engineer.

C. Unsuitable Bearing

1. If suitable bearings for foundations are not encountered at the elevations indicated on the Drawings, immediately notify the Engineer.

2. Do not proceed further until instructions are received.

3.04 DEWATERING REQUIREMENT

A. The Contractor may use any dewatering method he deems feasible so long as it results in working in the dry and stable soil conditions.

B. The Contractor shall conform and meet all conditions, obtain necessary permits and requirements of the regulatory agencies that have jurisdiction.

C. It is the intent of these specifications that an adequate dewatering system be installed to lower and control the groundwater in order to permit excavation, construction, grading and the placement of fill materials, all to be performed under dry conditions. The dewatering system shall be adequate to pre-drain the water-bearing strata above and below the bottom of the excavation.

D. The Contractor shall be solely responsible for the arrangement, location and depths of dewatering system necessary to accomplish the work described under this section of the specifications. The dewatering shall be accomplished in a manner that will reduce the hydrostatic head below any excavation to the extent that the water level in the construction area are a minimum of three (3) feet below the prevailing excavation surface and any surface to be compacted; will prevent the loss of fines, seepage, boils, quick conditions, or softening of the foundation strata; will maintain stability of the sides and bottom of the excavation; and will result in all construction operations being performed in the dry.

E. The Contractor shall promptly dispose of all water removed from the excavations in such a manner as will not endanger public health, damage public or private property, or affect adversely any portion of the work under construction or completed by him or any other Contractor. Contractor shall obtain written permission from the Owner for any property involved before digging ditches or constructing water courses for the removal of water.

F. The disposal of water from the dewatering system shall meet the requirements of all regulatory agencies having jurisdiction.

G. If the dewatering requirements are not satisfied due to inadequacy or failure of the dewatering system, then loosening of the foundation strata, or instability of the slopes, or damage to the foundations or structures may occur. The supply of all labor and materials and the performance of all work necessary to carry out additional work for reinstatement of the structures of foundation soil resulting from such inadequacy or failure shall be undertaken by the Contractor subject to the approval of the Engineer and at no additional expense to the Owner.

3.05 COMPACTION

A. Fill materials supporting roadways, parking areas, sidewalks, structures and buildings and backfill around structures shall be compacted to 95 percent of the standard proctor density. The top 12-inches of fill materials supporting structures or pavement shall be compacted to 98 percent of the standard proctor density. Fill placed for general site grading shall be compacted to 90 percent of the standard proctor density.

B. Compaction of embankments shall be by vibratory sheepsfoot or pad-foot rollers with staggered, uniformly spaced knobs and suitable cleaning devices. The projected area of each knob and the number and spacing of the knobs shall be such that the total weight of the roller and ballast when distributed over the area of one row of knobs shall be 250 psi. Placement and compaction of materials shall extend at least 5 feet beyond the final contours sufficiently to insure compaction of the material at the resulting final surface. Final contours shall then be achieved by a tracked bulldozer shaping the face of the embankment.

C. Compaction of backfill next to walls shall be accomplished with hand-powered tamping

equipment. The backfill shall be placed in 8-inch maximum lifts, with each lift compacted to 95 percent of standard proctor density.

D. If tests indicate that density of fill is less than that specified, the area shall be, as directed by the Engineer, either recompacted or undercut, filled and compacted until specified density is achieved.

3.07 FILL

A. Controlled Fill

1. The fill for roadways, parking areas, walks, structures and building slabs on grade shall be controlled fill.

2. After the existing ground or excavated area has been proofrolled and examined by the Engineer, all holes and other irregularities shall be filled and compacted before the main fill is placed.

3. The fill shall be placed in even layers not exceeding 8-inches in depth and shall be thoroughly compacted as herein specified.

4. If an analysis of the soil being placed shows a marked difference from one location to another, the fill being placed shall not be made up of a mixture of these materials.

5. Each different type of material shall be handled continuously so that field control of moisture and density may be based upon a known type of material.

6. No fill shall be placed following a heavy rain without first making certain on isolated test areas that compaction can be obtained without damage to the already compacted fill.

B. Proofrolling

1. All areas where roadways, parking areas, sidewalks, structures and buildings are to be constructed on cut areas, compacted fill and other areas where indicated on the Drawings, shall be proofrolled to detect soft spots prior to the placement of fill material or building foundations.

2. Proofrolling shall be performed using a fully loaded tandem-axle dump truck 20 tons or other suitable pneumatic tired equipment over the subgrade before the subgrade is shaped.

3. Proofrolling shall be witnessed by the Engineer.

4. Subgrade shall be proofrolled with 10 overlapping passes of the roller. Depressions that develop during the proofrolling operation shall be filled with suitable material and those filled areas shall be proofrolled with six passes of the roller. If, after having been filled and proofrolled, the subgrade areas that still “pump” or “rut”, shall be further evaluated by a geotechnical engineer and remedial work be determined based on the conditions found at locations under structures or pavement. The contractor shall execute remedial work determined by the geotechnical engineer to achieve a subgrade acceptable to the Engineer.

5. After the proofrolled subgrade has been accepted by the Engineer, the surface of the subgrade shall be finish rolled with a smooth steel wheel roller weighing not less than 10 tons. Finished surface of the subgrade shall be within a tolerance of 1/4-inch at every point.

6. Conduits, pipes, culverts and underdrains shall be neither disturbed nor damaged by proofrolling operations. Rollers shall neither pass over, nor approach closer than five feet to, conduits, pipes, culverts and underdrains unless the tops of those products are deeper than three feet.

C. Placement

1. Prior to placement of any material in embankments, the area within embankment limits shall be stripped of topsoil and all unsuitable materials removed in accordance with this Section. The area shall then be scarified to a depth of at least 6-inches.

2. Fill materials shall be placed in continuous, approximately horizontal layers extending the full width of the embankment cross-section and the full dimension of the excavation where practical and having an uncompacted thickness of not over 8-inches.

D. Final Grading: Upon completion of construction operations, the area shall be graded to finish contour elevations and grades shown on the Drawings. Graded areas shall be made to blend into conformation with remaining ground surfaces. All surfaces shall be left smooth and free to drain.

E. Excess Material: Surfaces and slopes of waste fills shall be left smooth and free to drain.

F. Moisture

1. Fill materials shall be placed at optimum moisture content within practicable limits, but not less or more than two percent of optimum. Optimum moisture shall be maintained by sprinkling the layers as placed or by allowing materials to dry before placement.

2. If fill material is too wet, provide and operate approved means to assist the drying of the fill until suitable for compaction.

3. If fill material is too dry, provide and operate approved means to add moisture to the fill layers.

3.08 BACKFILLING

A. Backfill carefully to restore the ground surface to its original condition. Dispose of excess material in accordance with this Section.

B. Compact backfill underlying roadways, parking areas, sidewalks, structures and buildings in accordance with the requirements of Article 3.06 of this Section.

C. Backfilling Around Structures

1. General

a. Remove debris from excavations before backfilling.

b. Do not backfill against foundation walls until so directed by the Engineer nor until all indicated perimeter insulation and/or waterproofing is in place.

c. Protect such insulation and/or waterproofing during filling operations.

d. Do not backfill against water retaining structures until successful leakage

tests have been completed.

e. Wherever possible, backfilling shall be simultaneous on both sides of walls to equalize lateral pressures.

f. Do not backfill against walls until all permanent construction is in place to furnish lateral support on both top and bottom of wall.

g. Backfilling against walls shall take place after all the concrete in the affected members has attained the specified strengths.

h. To prevent excessive lateral pressure on external walls, large compaction equipment shall not be allowed within a zone wall footing.

2. Materials: Backfill material placed against structures built or encountered during the work of this Section shall be suitable fill material. No broken concrete, bricks or similar materials will be permitted as backfill.

3.09 GRADING

A. General: Perform all rough and finish grading required to attain the elevations indicated on the Drawings. Perform finish grading to an accuracy of ±0.10 foot.

B. Treatment After Completion of Grading

1. After grading is completed, permit no further excavation, filling or grading, except with the approval of the Engineer.

2. Use all means necessary to prevent the erosion of freshly graded areas during construction and until such time as permanent drainage and erosion control measures have been installed.

3.09 SETTLEMENT

A. The Contractor shall be responsible for all settlement of backfill, fills and embankments which may occur within one year after final acceptance of the Work by the Owner.

B. The Contractor shall make, or cause to be made, all repairs or replacements made necessary by settlement within 30 days after receipt of written notice from the Engineer or Owner.

3.13 CLEAN-UP

A. Leave unused materials in a neat, compact stockpile.

B. Remove unused stockpiled materials, leave area in a clean and neat condition. Grade stockpile area to prevent standing surface water.

C. Leave borrow areas in a clean and neat condition. Grade to prevent standing surface water.

END OF SECTION

SECTION 31 10 00

SITE PREPARATION

PART 1 GENERAL

1.01 SECTION INCLUDES

A. Selective demolition of built site elements.

B. Clearing and protection of vegetation.

C. Removal of existing debris.

1.02 RELATED SECTIONS

A. Section 31 25 00 - Erosion and Sedimentation Control.

B. Section 01 74 19 - Waste Management

C. Section 31 11 00- Clearing and Grubbing.

D. Section 31 22 00 – Grading.

E. Section 31 23 16 - Excavation.

F. Section 31 23 23.13 – Backfill and Compaction.

1.03 REFERENCES

A. 29 CFR 1926 - U.S. Occupational Safety and Health Standards; current edition.

B. NFPA 241 - Standard for Safeguarding Construction, Alteration and Demolition Operations; 2013.

1.04 SUBMITTALS

A. See Section 01 30 00 - Administrative Requirements, for submittal procedures.

B. Site Plan: Showing:

1. Vegetation removal limits.

2. Areas for temporary construction and field offices.

3. Areas for temporary and permanent placement of removed materials.

C. Project Record Documents: Accurately record actual locations of capped and active utilities and subsurface construction.

1.05 PROJECT CONDITIONS

A. Minimize production of dust due to demolition operations; do not use water if that will result in ice, flooding, sedimentation of public waterways or storm sewers or other pollution.

PART 2 PRODUCTS – NOT USED

PART 3 EXECUTION

3.01 EXISTING UTILITIES

A. Coordinate work with utility companies; notify before starting work and comply with their requirements; obtain required permits.

B. Protect existing utilities to remain from damage.

C. Do not disrupt public utilities without permit from authority having jurisdiction.

D. Do not close, shut off, or disrupt existing life safety systems that are in use without at least seven (7) days prior written notification to Owner.

E. Do not close, shut off, or disrupt existing utility branches or take-offs that are in use without at least three (3) days prior written notification to Owner.

F. Locate and mark utilities to remain; mark using highly visible tags or flags, with identification of utility type; protect from damage due to subsequent construction, using substantial barricades if necessary.

G. Remove exposed piping, valves, meters, equipment, supports and foundations of disconnected and abandoned utilities.

H. Prepare building demolition areas by disconnecting and capping utilities outside the demolition zone; identify and mark utilities to be subsequently reconnected, in same manner as other utilities to remain.

3.02 VEGETATION

A. Scope: Remove trees, shrubs, brush and stumps in areas to be improved.

B. Do not begin clearing until vegetation to be relocated has been removed.

C. Do not remove or damage vegetation beyond the following limits:

1. Limits of Disturbance as illustrated on Construction Drawings

2. 25 feet outside perimeter of pervious paving areas that must not be compacted by construction traffic.

3. Exception: Specific trees and vegetation indicated on drawings to be removed.

4. Exception: Selective thinning of undergrowth specified elsewhere.

D. In areas where vegetation must be removed but no construction will occur other than pervious paving, remove vegetation with minimum disturbance of the subsoil.

E. Vegetation Removed: Do not burn, bury, landfill, or leave on site, except as indicated.

1. Chip, grind, crush or shred vegetation for mulching, composting, or other purposes; preference should be given to on-site uses.

2. Trees: Sell if marketable; if not, treat as specified for other vegetation removed; remove stumps and roots to depth of 18 inches.

3. Existing Stumps: Treat as specified for other vegetation removed; remove stumps and roots to depth of 18 inches.

4. Sod: Re-use on site if possible; otherwise sell if marketable, and if not, treat as specified for other vegetation removed.

5. Fill holes left by removal of stumps and roots, using suitable fill material, with top surface neat in appearance and smooth enough not to constitute a hazard to pedestrians.

F. Dead Wood: Remove all dead trees (standing or down), limbs and dry brush on entire site; treat as specified for vegetation removed.

G. Restoration: If vegetation outside removal limits or within specified protective fences is damaged or destroyed due to subsequent construction operations, replace at no cost to Owner.

3.03 DEBRIS

A. Remove debris, junk and trash from site.

3.04 WASTE REMOVAL

A. Remove from site all materials not to be reused on site; comply with requirements of Section 01 74 00 - Waste Management.

B. Leave site in clean condition, ready for subsequent work.

C. Clean up spillage and wind-blown debris from public and private lands.

3.05 MEASUREMENT AND PAYMENT

A. No separate measurement or direct payment will be made for the work under this section and all costs for same shall be included in the overall lump sum bid for this project.

END OF SECTION

SECTION 31 11 00

CLEARING AND GRUBBING

PART 1 GENERAL

1.01 DESCRIPTION

A. Work included: Remove all organic vegetative mater as required to complete the construction as indicated on the construction plans.

B. Related work:

1. Documents affecting work of this Section include, but are not necessarily limited to, General Conditions, Supplementary Conditions and Sections in Division 1 of these Specifications.

2. Section 01 71 23 - Field Engineering.

3. Section 31 10 00 - Site Preparation.

4. Section 02 41 00 – Demolition

5. Section 31 25 00 - Erosion and Sedimentation Control.

1.02 QUALITY ASSURANCE

A. Use required number of workmen that are properly trained and have experience in the crafts and who are completely familiar with the specified requirements herein and the methods for proper performance of the work specified in this section.

B. Use the proper equipment that is adequate in size, capacity and numbers to accomplish the work within the timeframe of the Project schedule.

C. Comply with requirements of governmental agencies having jurisdiction within the Project area.

PART 2 PRODUCTS - NOT USED

PART 3 EXECUTION

3.01 AREA INCLUDED

A. All areas where new construction is taking place or as illustrated on the plans.

3.02 PROCEDURES

A. Clearing and grubbing: The entire area within the limits described above shall be cleared and grubbed at a minimum depth of 6-inches.

B. Areas that are to be selectively cleared shall consist of removing vegetation, brush, stumps, etc., from the area. Special care shall be taken to avoid damage to trees that are left. Grubbing will not be required in areas designated for selective clearing.

C. Removal of trees and shrubs: All trees being taken down must be removed avoiding damage to trees and existing features that are to remain. All parts of the trees being removed are to be completely taken from the site and properly disposed of. Any shrubs or small trees that are undesirable may be selectively removed as directed.

D. Stumps and roots: All stumps and roots larger than 2-inches in diameter shall be completely removed by grubbing except in areas of building site, parking areas and drives; they must be cut off no less than 18-inches below any subgrade. The area of operation then shall be cleared of resulting debris and matted roots, weeds and other organic matter shall be hauled away from the site. Generally, all material that cannot be compacted to 90-percent maximum density in lawn areas and 95-percent of maximum density elsewhere must be removed.

E. Protection of trees: Trees that are to remain in place will need to be protected in areas where earthwork cut or fill is eighteen inches or less and in existing parking areas. Contractor must obtain approval from Engineer prior to removal of significant trees covered by local tree ordinances. Existing trees that are remaining in place during and after construction must be protected by constructing barricades around each tree.

F. Erosion and Sediment Control: Construct and maintain erosion and sediment control devices as illustrated on the construction plans and in accordance with Section 31 25 00 – Erosion and Sedimentation Control of these specifications.

3.03 MEASUREMENT AND PAYMENT

A. No separate measurement or direct payment will be made for the work under this Section and all costs for same shall be included in the lump sum price bid.

END OF SECTION

SECTION 31 22 00

GRADING

PART 1 GENERAL

1.01 SECTION INCLUDES

A. Work included: Cut, fill, excavate, backfill, compact and grade the site as necessary to bring the roads, drives, building sites, paved areas and open areas to the lines and grades shown on the drawings.

1. The work includes, but is not necessarily limited to:

a. Building site preparation.

b. Roadway, parking area, drive and walk subgrade preparation.

c. Excavations and formations of embankments.

d. Dressing of graded areas, shoulders and ditches.

2. Subsurface Classification: All excavation is unclassified and excavation of every description, regardless of material encountered within the grading limits of the project, shall be performed to the lines and grades indicated.

B. Removal and storage of topsoil.

C. Rough grading the site for improvements.

D. Topsoil and finish grading.

1.02 RELATED SECTIONS

A. Documents affecting work of this Section include, but are not necessarily limited to, General Conditions and Sections in Division 1 of these specifications.

B. Section 31 11 00 - Clearing and Grubbing.

C. Section 31 25 00 - Erosion and Sedimentation Control.

D. Section 31 23 16 - Excavation.

E. Section 31 23 16.13 – Trenching for Site Utilities

F. Section 31 23 23.13 - Backfill and Compaction

G. Section 32 11 23 - Aggregate Base Course.

1.03 Definitions

A. Open areas: Open areas shall be those areas that do not include building sites, paved areas, street right-of-way and parking areas.

B. Maximum density: Maximum weight in pounds per cubic foot of a specific material.

C. Optimum moisture: Percentage of water in a specific material at maximum density.

D. Rock excavation: Excavation of any hard natural substance which requires the use of explosives and/or special impact tools such as jack hammers, sledges, chisels or similar devices specifically designed for use in cutting or breaking rock, but exclusive of trench excavating machinery. To be considered as rock excavation, the material shall be continuous; individual boulders or rocks in soil will not be considered rock excavation.

E. Muck: Materials unsuitable for foundation because of organic content, saturation to the extent that it is somewhat fluid and must be removed by dragline, dredge or other special equipment, are designated as muck. No extra payment will be made for muck removal.

F. Unsuitable material: Unsuitable material is defined as earth material unsatisfactory for its intended use and as classified by the soils technician. In addition to organic matter, sod, muck, roots and rubbish, highly plastic clay soils of the CH and MH descriptions and organic soils of the OL and OH descriptions, as defined in the Unified Soil Classification System shall be considered as unsuitable material.

G. Suitable material: Where the term suitable material is used in specification sections pertaining to earthwork, it means earth or materials designated as being suitable for their intended use by soils technicians or the Engineer. Suitable material shall be designated as meeting the requirements of the Unified Soil Classification System types SW, GW, GC, SC, SM, ML, CL or as designated in these specifications.

H. Select material: Select material is defined as granular material to be used where indicated on the drawings or where specified herein consisting of soils conforming to the Unified Soil Classification types SW, SM, GW or GM or as otherwise approved by the Engineer as select fill. Select material shall contain no stones or rubble larger than 1-1/2 inches in diameter.

I. Crushed stone (gravel): Crushed stone shall be No. 57 aggregate or equal conforming to ASTM C-33.

J. Excavation: Excavation is defined as unclassified excavation of every description regardless of materials encountered.

1.04 SUBMITTALS

A. Project Record Documents: Accurately record actual locations of utilities remaining by horizontal dimensions, elevations or inverts and slope gradients.

1.05 QUALITY ASSURANCE

A. Perform Work in accordance with State of South Carolina, Department of Transportation standards.

B. Use adequate numbers of skilled workmen who are thoroughly trained and experienced in the necessary crafts and who are completely familiar with the specified requirements and the methods needed for proper performance of the work of this Section.

C. Comply with requirements of governmental agencies having jurisdiction.

D. A testing laboratory, retained by the Contractor and approved by the Owner, will make such tests as are deemed advisable. Test as specified in Section 01 45 29, Testing Laboratory Services.

E. The Contractor shall schedule his work so as to permit a reasonable time for testing before placing succeeding lifts of fill material and shall keep the laboratory informed of his progress. The cost of the initial tests shall be paid for by the Contractor. Subsequent tests required as a result of improper compaction shall also be paid for by the Contractor.

F. Contractor shall provide all required equipment and contact Engineer to setup time for Proof Roll Testing across all areas that have been graded. The Engineer and Geotechnical Engineer will provide final approval to the Contractor during site visit. Any additional cost required from multiple testing visits and trip will be the responsibility of the Contractor, not the Owner nor Engineer.

1.06 PROJECT CONDITIONS

A. Protect above- and below-grade utilities that remain.

B. Protect bench marks, survey control points, existing structures, fences, sidewalks, paving and curbs from grading equipment and vehicular traffic.

C. The Contractor must determine for himself the volume of material required by the site.

1.07 PRODUCT HANDLING

A. Comply with pertinent provisions of Section 01 60 00 - Product Requirements.

1.08 JOB CONDITIONS

A. Notification of intent to excavate:

1. South Carolina Underground Utility Damage Prevention Act (S.C. Code Ann, 58-35-10, 2012) requires persons to ascertain the location of underground public utility property prior to excavation or demolition in certain situations. The Act also requires such persons to give timely notice of intent to excavate or demolish prior to commencing such operations. Failure to comply could subject the violator to a civil penalty of up to one thousand dollars ($1,000) for each violation of the Act.

2. Notification of intent to excavate may be given by calling this toll free number: 1-800-922-0983.

PART 2 PRODUCTS

2.01 SOIL MATERIALS

A. General:

1. Soil material used as fill, backfill, subgrade for structures or pavements, embankments, or site grading shall consist of suitable material as found available on site until such supply of on-site material is depleted.

a. Provide suitable material free from organic matter and deleterious substances, containing no rocks or lumps over 6 inches in greatest dimension and with not more than 15% of the rocks or lumps larger than 2-1/2 inches in their greatest dimension.

b. Do not permit rocks having a dimension greater than 1 inch in the upper 6 inches of fill or embankment.

2. Should the quantity of suitable on-site material be insufficient to complete the work, suitable borrow material as approved by the Engineer shall be provided by the Contractor at no additional expense to the Owner.

3. Select materials may be provided from on-site if acceptable material as approved by the Engineer is available on site. Otherwise approved select material shall be provided by the Contractor from an off-site source.

B. Topsoil:

1. Use topsoil consisting of material removed from the top 3 to 6 inches of existing on-site soils.

2. Use topsoil containing no stones, roots or large clods of soil.

3. Stockpile topsoil separate from other excavated material.

2.02 WEED KILLER

A. Provide a dry, free-flowing, dust free chemical compound, soluble in water, capable of inhibiting growth of vegetation and approved for use on this work by governmental agencies having jurisdiction.

2.03 EQUIPMENT

A. Use equipment adequate in size, capacity and numbers to accomplish the work in a timely manner without undue waste or damage of material.

PART 3 EXECUTION

3.01 EXAMINATION

A. Verify that survey bench mark and intended elevations for the Work are as indicated.

B. Surface Conditions:

1. Examine the areas and conditions under which work of this Section will be performed. Correct conditions detrimental to timely and proper completion of the work. Do not proceed until unsatisfactory conditions are corrected.

3.02 PREPARATION

A. Identify required lines, levels, contours and datum.

B. Stake and flag locations of known utilities.

C. Locate, identify and protect utilities that remain, from damage.

D. Notify utility company to remove and relocate utilities.

E. Clearing and grubbing: Clear and grub areas to be graded prior to commencement of the grading operations.

F. Where so directed by the Owner, protect and leave standing designated desirable trees.

G. Complete any demolition and/or removal work as may be required prior to grading operations.

H. Dispose of all clearing, grubbing and demolition debris and other deleterious material off the project site. Vegetation, roots, brush, rubbish, stumps, etc. may be burned on-site where permitted by local authorities and regulations and approved by the Engineer.

I. Topsoil: Strip topsoil to a depth of 3 to 6 inches without contamination from the subsoil and stockpile topsoil separate from other excavated materials.

1. Transport and deposit topsoil in storage piles convenient to areas that are to receive topsoil or in other locations as indicated or approved by the Engineer.

2. Deposit topsoil in areas that are already graded and will not be disturbed by on-going construction.

3. Dispose of unsuitable or unusable stripped material off-site or as otherwise directed by the Engineer.

J. Sampling and preliminary testing:

1. Prior to beginning the grading operations, the Contractor shall submit to the Engineer his proposed sequence of excavation operations.

2. Based upon the sequence of excavation, samples of the fill materials will be obtained as excavation proceeds and tested for grain size permeability and moisture density relationship using the Standard Proctor Method (ASTM D698, Method A).

3. Allow sufficient time for completion of laboratory tests before any fill operations begin, using the soils being tested.

3.03 ROUGH GRADING

A. Remove topsoil from areas to be further excavated, re-landscaped, or re-graded, without mixing with foreign materials.

B. Remove subsoil from areas to be further excavated, re-landscaped, or re-graded.

C. Do not remove wet subsoil, unless it is subsequently processed to obtain optimum moisture content.

D. When excavating through roots, perform work by hand and cut roots with sharp axe.

E. Perform excavating of every type of material encountered within the limits of the Work to the lines, grades and elevations indicated and specified herein.

F. Suitable excavated materials:

1. Use all suitable materials removed from the excavation as far as practicable in the formation of the embankments, subgrades, shoulders, building sites and other places as directed.

2. Unless otherwise indicated on the drawings or approved by the Engineer, surplus suitable material shall be removed from the site and disposed of by the Contractor.

G. Unsuitable excavated material: Remove from the site and dispose of all unsuitable material unless otherwise approved by the Engineer.

H. Rock excavation:

1. Notify the Engineer upon encountering rock or similar material which cannot be removed or excavated by conventional earth moving or ripping equipment.

2. Do not use explosives without written permission from the Engineer.

3. When explosives are permitted, use only experienced powdermen or persons who are licensed or otherwise authorized to use explosives. Store, handle and use explosives in strict accordance with all regulatory bodies and the "Manual of Accident Prevention in Construction" of the Associated General Contractors of America, Inc.

4. The Contractor shall be solely responsible for any damage resulting from the use of explosives.

5. The Contractor is responsible for securing all permit required in performing this work.

I. Unauthorized excavation:

1. Excavation of material to depths below the grades indicated unless so directed by the Engineer will be deemed unauthorized excavation.

2. Unauthorized overexcavation shall be backfilled and compacted without any additional expense to the Owner.

J. In the event that it is necessary to remove unsuitable material to a depth greater than that shown on the drawings or otherwise specified, the Contractor, upon receiving direction from the Engineer, shall remove, replace and compact such material as directed by the Engineer at no additional expense by the Owner.

K. Filling and Backfilling

1. Use fills formed of suitable material placed in layers of not more than 8" in depth measured loose and rolled and/or vibrated with suitable equipment until compacted.

2. Do not place rock that will not pass through a 6-inch diameter ring within the top 12 inches of the surface of the completed fill or rock that will not pass through a 3 inch diameter ring within the top 6 inches of the completed fill.

3. Do not use broken concrete or asphaltic pavement in fills.

4. Selection of borrow material:

a. Material in excess of that available on the site shall be suitable material furnished by the Contractor from private sources selected by the

Contractor. The material shall be approved by the Engineer before use. All expenses involved in securing, developing, transporting and placing the material shall be borne by the Contractor.

L. Placing and compacting:

1. Place backfill and fill materials in layers not more than 8 inches in loose depth.

2. Before compacting, moisten or aerate each layer as necessary to provide the optimum moisture content.

3. Compact each layer to required percentage of maximum density for the area.

4. Do not place backfill or fill material on surfaces that are muddy, frozen, or contain frost or ice.

5. Place backfill and fill materials evenly adjacent to structures, to required elevations.

6. Take care to prevent wedging action of backfill against structures by carrying the material uniformly around the structures to approximately the same elevation in each lift.

M. Moisture control:

1. Do not use soil material that is either too dry or too wet to achieve proper compaction.

2. Where subgrade or layer of soil material is too dry to achieve proper compaction, uniformly apply water to surface of soil material such that free water does not appear on the surface during or subsequent to compacting operations.

3. Remove and replace, or scarify and air dry, soil material that is too wet to permit compacting to the specified density.

4. Soil material that has been removed because it is too wet to permit compacting may be stockpiled or spread and allowed to dry. Assist drying by disking, harrowing, or pulverizing until moisture content is reduced to a satisfactory value as determined by moisture-density relation tests approved by the Engineer.

N. Compaction requirements:

1. Compact soils to not less than the following percentages of maximum dry density as determined in accordance with ASTM D698, Method A (Standard Proctor).

2. Fill beneath structures and beneath an area extending 10' beyond the limits of the foundation:

   a. Top 12 inches of Subgrade 100%

   b. All other fill material 98%

3. Beneath Roadways:

   a. Top 12 inches of Subgrade 100%

b. All other fill material 95%

4. Embankments:

a. Top 12 inches of Subgrade 98%

b. All other fill material 95%

5. Beneath Sidewalks:

a. Top 12 inches of Subgrade 95%

b. All other fill material 90%

6. Lawns and unpaved areas:

a. All other fill material 90%

O. Placing of Special Materials:

1. Placing impervious liner materials:

a. Place selected fine grain soils on bottom and side slopes of the basin to the indicated depth.

b. Inspect and proofroll the stripped and grubbed subgrade prior to placement of any liner material, as specified hereinafter.

c. Spread liner material in 8-inch maximum, loose lift thickness to provide a 6 inch compacted lift thickness.

d. Adjust soil moisture content to 1 to 3 percentage points "wet" of the optimum moisture contents.

e. Compact at 98% of maximum density.

f. Maintain liner material sufficiently moist to prevent drying and cracking, until such time as the basin is filled.

P. Stability: Replace damaged or displaced subsoil to same requirements as for specified fill.

3.04 SOIL REMOVAL

A. Stockpile excavated topsoil on site.

B. Stockpile subsoil to be re-used on site; remove remainder from site.

C. Stockpiles: Use areas designated on site; pile depth not to exceed 8 feet (2.5 m); protect from erosion.

3.05 FINISH GRADING

A. General:

1. Uniformly grade the areas within limits of grading under this Section, including adjacent transition areas.

2. Smooth the finished surfaces within specified tolerance.

3. Grade with uniform levels or slopes between points where elevations are shown on the drawings, or between such points and existing grades.

4. Where a change of slope is indicated on the drawings, construct a rolled transition section having a minimum radius of approximately 8'-0", unless adjacent construction will not permit such a transition, or if such a transition defeats positive control of drainage.

B. Before Finish Grading:

1. Verify subgrade has been contoured and compacted.

C. Remove debris, roots, branches, stones, in excess of 1/2 inch (13 mm) in size. Remove soil contaminated with petroleum products.

D. Grading adjacent to structures: Grade areas adjacent to buildings to achieve drainage away from the structures and to prevent ponding.

E. Ditches and gutters and swales:

1. Cut accurately to the cross sections, grades and elevations shown.

2. Maintain excavations free from detrimental quantities of leaves, sticks, trash and other debris until completion of the work.

3. Dispose of excavated materials as specified herein; do not in any case deposit materials within 3'0" of the edge of a ditch.

F. Upon completion of site grading and other related site work, topsoil shall be uniformly spread over the graded or improved areas. Topsoil shall be evenly distributed to conform to final grade elevations shown on the plans.

G. Where topsoil is to be placed, scarify surface to depth of 3 inches (75 mm).

H. In areas where vehicles or equipment have compacted soil, scarify surface to depth of 3 inches (75 mm).

I. Place topsoil in areas where grassing/seeding are indicated.

J. Place topsoil to the following compacted thicknesses:

K. Areas to be seeded with grass not less than: 3 inches (75 mm).

L. Place topsoil during dry weather.

M. Remove roots, weeds, rocks and foreign material while spreading topsoil.

N. Near plants spread topsoil manually to prevent damage.

O. Fine grade topsoil to eliminate uneven areas and low spots. Maintain profiles and contour of subgrade.

P. Lightly compact placed topsoil.

Q. Any surplus topsoil materials shall be disposed of in approved areas on the site.

3.06 TOLERANCES

A. Top Surface of Subgrade: Plus or minus 1/10 foot (30 mm) from required elevation.

B. Top Surface of Finish Grade: Plus or minus 1/2 inch (13 mm).

C. Construct areas outside of building or structure lines true to grades shown.

1. Where no grade is indicated, shape finish surface to drain away from buildings or structures, as approved by the Engineer.

D. Degree of finish shall be that ordinarily obtainable from bladegrader, supplemented with hand raking and finishing.

3.07 FIELD QUALITY CONTROL

A. See Section 31 23 23.13 - Backfill and Compaction, for compact density testing and the following:

B. Secure the Engineer's construction review and observation and approval of subgrades and fill layers before subsequent construction is permitted thereon.

C. Field density determinations will be made, at no additional cost to the Owner, to ensure that the specified densities are being obtained. Field density tests will be performed as determined by the Engineer, considering the following:

1. At areas to receive paving, at least one field density test for every 5,000 sq. ft. of subgrade area, but not less than three tests.

2. In each compacted fill layer, one field density test for every 5,000 sq. ft. of overlaying paved area, but not less than three tests.

3. In fill beneath structures, one field density test for every 2,500 sq. ft. in each layer.

4. Other tests as deemed necessary by the Engineer.

D. If, in the Engineer's opinion based on reports of the testing laboratory, subgrade or fills which have been placed are below specified density, provide additional compacting and testing until specified requirements are met.

1. Additional testing will be provided by the Owner-approved testing laboratory and all costs for the additional testing will be borne by the Contractor.

E. Proofrolling:

1. The Contractor shall proofroll subgrade of areas to receive paving, structures on fill or impervious lining material.

   a. Make not less than 3 passes of a 25 to 50 ton rubber tired roller over the full area.

   b. Unstable, soft or otherwise unsuitable materials revealed by the proofrolling shall be removed and replaced with satisfactory materials, compacted as specified herein.

3.08 CLEANING AND PROTECTION

A. Remove unused stockpiled topsoil and subsoil. Grade stockpile area to prevent standing water.

B. Leave site clean and raked, ready to receive landscaping.

C. Existing utilities:

1. Unless shown to be removed, locate and protect active utility lines shown on the drawings or otherwise made known to the Contractor prior to excavating. If damaged, repair or replace at no additional cost to the Owner.

2. If active utility lines are encountered and are not shown on the drawings or otherwise made known to the Contractor, promptly notify the Engineer and take necessary steps to assure that service is not interrupted.

3. If service is interrupted as a result of work under this Section, immediately restore service by repairing the damaged utility at no additional cost to the Owner.

4. If existing utilities are found to interfere with the permanent facilities being constructed under this Section, immediately notify the Engineer and secure his instructions.

5. Do not proceed with permanent relocation of utilities until written instructions are received from the Engineer.

D. Protection of persons and property:

1. Barricade open holes and depressions occurring as part of this Work and post warning lights on property adjacent to or with public access.

2. Operate warning lights during hours from dusk to dawn each day and as otherwise required.

3. Protect structures, utilities, sidewalks, pavements and other facilities from damage caused by settlement, lateral movement, washout and other hazards created by operations under this Section.

E. Use means necessary to prevent dust becoming a nuisance to the public, to neighbors and to other work being performed on or near the site.

F. Maintain access to adjacent areas at all times.

G. Excavate and backfill in a manner and sequence that will provide proper drainage at all times.

3.09 MAINTENANCE

A. Protection of newly graded areas:

1. Protect newly graded areas from traffic and erosion and keep free from trash and weeds.

2. Repair and re-establish grades in settled, eroded and rutted areas to the specified tolerances.

B. Where completed compacted areas are disturbed by subsequent construction operations or adverse weather, scarify the surface, reshape and compact to the required density prior to further construction.

3.10 MEASUREMENT AND PAYMENT

A. No separate measurement or direct payment will be made for the work under this Section and all costs for same shall be included in the lump sum bid price.

END OF SECTION

SECTION 31 23 16

EXCAVATION

PART 1 GENERAL

1.01 WORK REQUIRED BY THIS SECTION

A. Excavating for Utility Structures, Water and Wastewater Lines

1.02 RELATED SECTIONS

A. Documents affecting work of this Section include, but are not necessarily limited to, General Conditions and Sections in Division 01 of these Specifications.

B. Section 01 70 00 - Execution Requirements

C. Section 31 22 00 - Grading.

D. Section 31 23 23.13 - Backfill and Compaction.

E. Section 31 23 16.13 – Trenching for Site Utilities.

F. Section 31 25 00 - Erosion and Sedimentation Control.

1.03 PROJECT CONDITIONS

A. Verify that survey benchmarks and intended elevations for the Work are as indicated.

B. Protect plants, lawns, rock outcroppings and other features to remain.

C. Protect bench marks, survey control points, existing structures, fences, sidewalks, paving and curbs from excavating equipment and vehicular traffic.

1.04 CLASSIFICATION:

A. Classification: All excavation is unclassified and excavation of every description, regardless of material encountered within the excavation limits of the structure, shall be performed to the lines and grades indicated.

1.05 DEFINITIONS:

A. Open areas: Open areas shall be those areas that do not include building sites, paved areas, street right-of-way and parking areas.

B. Maximum density: Maximum weight in pounds per cubic foot of a specific material.

C. Optimum moisture: Percentage of water in a specific material at maximum density.

D. Rock excavation: Excavation of any hard natural substance which requires the use of explosives and/or special impact tools such as jack hammers, sledges, chisels or similar devices specifically designed for use in cutting or breaking rock, but exclusive of trench excavating machinery. To be considered as rock excavation, the material shall be continuous; individual boulders or rocks in soil will not be considered rock excavation.

E. Muck: Materials unsuitable for foundation because of organic content, saturation to the extent that it is somewhat fluid and must be moved by dragline, dredge, or other special equipment, are designated as muck. No extra payment will be made for muck removal.

F. Unsuitable material: Unsuitable material is defined as earth material unsatisfactory for its intended use and as classified by the soils technicians. In addition to organic matter, sod, muck, roots and rubbish, highly plastic clay soils of the CH and MH descriptions and organic soils of the OL and OH descriptions, as defined in the Unified Soil Classification System shall be considered as unsuitable material.

G. Suitable material: Where the term suitable material is used in specification sections pertaining to earthwork, it means earth or materials designated as being suitable for their intended use by soils technicians or the Engineer. Suitable material shall be designated as meeting the requirements of the Unified Soil Classification System types SW, GW, GC, SC, SM, ML, Cl or as designated in these specifications.

H. Select material: Select material is defined as granular material to be used where indicated on the drawings or where specified herein consisting of soils conforming to the Unified Soil Classification types SW, SM, GW, or GM or as otherwise approved by the Engineer as select fill. Select material shall contain no stones or rubble larger than 1-1/2 inches in diameter.

I. Crushed stone (gravel): Crushed stone shall be No. 57 aggregate or equal conforming to ASTM C 33.

J. Excavation: Excavation is defined as unclassified excavation of every description regardless of materials encountered.

1.06 QUALITY ASSURANCE

A. Use adequate numbers of skilled workmen who are thoroughly trained and experienced in the necessary crafts and who are completely familiar with the specified requirements and the methods needed for proper performance of the work of this Section.

B. Comply with requirements of governmental agencies having jurisdiction

C. Testing: A testing laboratory, retained by the Contractor and approved by the Owner, will make such tests as are deemed advisable. Test as specified in Section 01 45 29, Testing Laboratory Services.

1. Schedule fill and backfill operations so as to permit a reasonable time for inspection and testing before placing succeeding lifts and keep the laboratory and Engineer informed of progress.

2. Notify the Engineer and allow sufficient time for observation and/or testing of foundation subgrades prior to commencing any work on the exposed excavation.

1.07 JOB CONDITIONS

A. If conditions encountered during construction warrant additional removal of unsuitable material below foundation subgrades, then remove unsuitable material and replace it as specified at no additional expense to the Owner.

1.08 PRODUCT HANDLING

A. Comply with pertinent provisions of Section 01 60 00.

PART 2 PRODUCTS – NOT USED

PART 3 EXECUTION

3.01 PREPARATION

A. Identify required lines, levels, contours and datum locations.

B. See Section 31 22 00 - Grading, for additional requirements.

C. Locate, identify and protect utilities that remain and protect from damage.

D. Notify utility company to remove and relocate utilities.

3.02 EXCAVATING

A. Underpin adjacent structures that could be damaged by excavating work.

B. Excavate to accommodate new structures and construction operations.

C. Notify Engineer of unexpected subsurface conditions and discontinue affected Work in area until notified to resume work.

D. Preparation for Piling Work: Excavate to working elevations. Coordinate special requirements for piling.

E. Slope banks of excavations deeper than 4 feet (1.2 meters) to angle of repose or less until shored.

F. Do not interfere with 45 degree bearing splay of foundations.

G. Cut utility trenches wide enough to allow inspection of installed utilities.

H. Hand trim excavations. Remove loose matter.

I. Remove lumped subsoil, boulders and rock up to 1/3 cu yd (0.25 cum) measured by volume.

J. Correct areas that are over-excavated and load-bearing surfaces that are disturbed; See Section 31 23 23.13 – Backfill and Compaction.

K. Conform to elevations and dimensions shown within a tolerance of 0.10 feet and extending a sufficient distance from footings and foundations to permit placing and removing concrete formwork, installation of services, other construction required and for construction observation.

L. Where earth will stand, shallow footing excavations may be cut to the exact size of the footing.

M. Grade top perimeter of excavation to prevent surface water from draining into excavation.

N. Remove excavated material that is unsuitable for re-use from site.

O. Stockpile excavated material to be re-used in area designated on site in accordance with Section 31 22 00 - Grading.

P. Remove excess excavated material from site.

3.03 FOUNDATION SUBGRADES

A. Excavate foundations and footings to a level bottom in firm, solid, suitable material.

B. Take care not to disturb the bottom of the excavation unless further compaction of the subgrade is required.

C. Notify the Engineer in due time to permit observation of the completed excavation prior to performing work on the foundation subgrade.

D. Should unsuitable or soft material be encountered at subgrade elevation, remove such material and replace with compacted suitable material or crushed stone from firm earth up to the indicated elevation.

1. In wet excavations or where groundwater is normally present, replace unsuitable material with crushed stone or lean concrete.

2. In dry excavations above the normal groundwater level, replace unsuitable material with compacted suitable material.

3. Unsuitable material shall be removed and replaced at no expense to the Owner.

4. Where rock is encountered at foundation level:

a. Use drilling, picking, wedging or similar methods leaving the foundation rock in an entirely solid and unshattered condition.

b. Roughen approximately level surfaces to provide satisfactory bond with concrete.

c. Cut steps or benches in sloped surfaces to provide satisfactory bond.

3.04 DRAINAGE

A. Provide drainage and control grading in the vicinity of the work to prevent drainage into the excavation.

3.05 ROCK EXCAVATION

A. Notify the Engineer upon encountering rock or similar material that cannot be removed or excavated by conventional earth moving or ripping equipment.

B. Do not use explosives without written permission from the Engineer.

C. When explosives are permitted, use only experienced powdermen or persons who are licensed or otherwise authorized to use explosives. Store, handle and use explosives in strict accordance with all regulatory bodies and the "Manual of Accident Prevention in Construction" of the Associated General Contractors of America, Inc.

D. The Contractor shall be solely responsible for any damage resulting from the use of explosives.

E. The Contractor is responsible for securing all permits required in performing this work.

F. Do not use blasting adjacent to existing buildings or structures. Remove rock at such locations using jack hammers and bull points.

3.06 UNAUTHORIZED EXCAVATION

A. Excavation of material to depths below the grades indicated unless so directed by the Engineer will be deemed unauthorized excavation.

B. Backfill and compact unauthorized over excavation at no expense to the Owner.

1. In wet excavations or excavations below normal groundwater elevations: Use crushed stone or lean concrete as directed by the Engineer.

2. In dry excavations above normal groundwater elevations: Use compacted suitable material.

3.07 DEWATERING

A. Remove all surface and subsurface waters from excavations and maintain the excavation in a dry condition during construction operations.

B. Maintain the water level below the excavation subgrade during excavation and construction.

1. Material disturbed below the foundation subgrade due to improper dewatering shall be removed and replaced with crushed stone or lean concrete at no expense to the Owner.

2. Use sumps, pumps, drains, trenching or well point system as necessary to maintain a dry excavation.

3. Dewatering by trench pumping will not be permitted if migration of fine grained natural material (running sand) from bottom, side walls or bedding material will occur.

C. Dispose of water pumped from excavations in storm drains having capacity, canals, trenches or other approved locations.

1. Contractor is responsible for acquiring all permits required to discharge the water and shall protect waterways from turbidity during the operation.

2. Prevent flooding of streets, roadways, or private property.

3. Provide engines driving dewatering pumps with residential type mufflers.

3.08 FIELD QUALITY CONTROL

A. See Section 01 40 00 - Quality Requirements, for general requirements for field inspection and testing.

B. Provide for visual inspection of load-bearing excavated surfaces before placement of foundations.

3.09 PROTECTION

A. Prevent displacement of banks and keep loose soil from falling into excavation; maintain soil stability.

B. Protect bottom of excavations and soil adjacent to and beneath foundation from freezing.

C. Protect structures, sidewalks, pavements and other facilities from damage caused by settlement, lateral movement, washout and other hazards created by operations under this Section.

D. Unless shown to be removed, locate and protect active utility lines shown on the drawings or otherwise made known to the Contractor prior to excavating. If damaged, repair or replace at no additional cost to the Owner.

E. If active utility lines are encountered and are not shown on the drawings or otherwise made known to the Contractor, promptly notify the Engineer and take necessary steps to assure that service is not interrupted.

F. Barricade open holes and depressions occurring as part of this work and post warning lights on property adjacent to or with public access. Operating warning lights during hours from dusk to dawn each day and as otherwise required.

G. Side slopes: Slope, bench and/or shore sides of excavations and trench walls to maintain stability of the wall or sides. Pile materials obtained from the excavation a minimum of four feet from the edge of the excavation.

H. Shoring and sheeting: Where necessary, shore and sheet excavations with members of sizes and arrangement sufficient to prevent injury to persons, damage to structures or injurious caving or erosion.

1. Furnish, put in place and maintain such sheeting and bracing as may be required to support the sides of excavations, to prevent any movement which could in any way diminish the width of the excavation below that necessary for proper construction and to protect adjacent structures from undermining or other damage. Any movement or bulging that may occur shall be corrected immediately by the Contractor. Care shall be taken to prevent voids outside of the sheeting, but if voids are formed, they shall be immediately filled and compacted.

2. Take all precautions to prevent distress of existing structures because of sheeting installation or removal. Where the removal of sheeting may cause damage to existing or newly constructed structures, such sheeting shall be left in place at no expense to the Owner.

3. All sheeting and shoring operations and maintenance thereof shall be the responsibility of the Contractor.

3.10 MEASURMENT AND PAYMENT

A. No separate measurement or direct payment will be made for the work under this Section and all costs for same shall be included in the lump sum bid.

END OF SECTION

SECTION 31 23 16.13

TRENCHING FOR SITE UTILITIES

PART 1 GENERAL

1.01 SECTION INCLUDES

A. Backfilling and compacting for underground utilities.

1.02 RELATED REQUIREMENTS

A. Documents affecting work of this Section include, but are not necessarily limited to, General Conditions, Sections in Division 1 of these Specifications.

B. Section 01 71 23 - Field Engineering.

C. Section 31 22 00 - Grading.

D. Section 31 23 16 - Excavation.

E. Section 31 23 23.13 – Backfill and Compaction.

F. Section 33 41 00 - Storm Utility Drainage Piping.

1.03 DEFINITIONS

A. Subgrade Elevations: Indicated on drawings.

1.04 REFERENCES

A. AASHTO T 180 - Standard Specification for Moisture-Density Relations of Soils Using a 4.54 kg (10-lb) Rammer and a 457 mm (18 in.) Drop; American Association of State Highway and Transportation Officials; 2010 (2009).

B. ASTM C136 - Standard Test Method for Sieve Analysis of Fine and Coarse Aggregates; 2006.

C. ASTM D698 - Standard Test Methods for Laboratory Compaction Characteristics of Soil Using Standard Effort (12,400 ft-lbf/ft3 (600 kN-m/m3)); 2012.

D. ASTM D1556 - Standard Test Method for Density and Unit Weight of Soil in Place by the Sand-Cone Method; 2007.

E. ASTM D1557 - Standard Test Methods for Laboratory Compaction Characteristics of Soil Using Modified Effort (56,000 ft-lbf/ft3 (2,700 kN m/m3)); 2012.

F. ASTM D2167 - Standard Test Method for Density and Unit Weight of Soil in Place by the Rubber Balloon Method; 2008.

G. ASTM D2487 - Standard Practice for Classification of Soils for Engineering Purposes (Unified Soil Classification System); 2011.

H. ASTM D 2922 - Standard Test Methods for Density of Soil and Soil-Aggregate in Place by Nuclear Methods (Shallow Depth); 2005.

I. ASTM D3017 - Standard Test Method for Water Content of Soil and Rock in Place by Nuclear Methods (Shallow Depth); 2005.

J. ASTM D4318 - Standard Test Methods for Liquid Limit, Plastic Limit and Plasticity Index of Soils; 2010.

K. ASTM D6938 - Standard Test Method for In-Place Density and Water Content of Soil and Soil-Aggregate by Nuclear Methods (Shallow Depth); 2010

1.05 SUBMITTALS

A. See Section 01 30 00 - Administrative Requirements, for submittal procedures.

B. Samples: 10 lb. sample of each type of fill; submit in air-tight containers to testing laboratory.

C. Materials Sources: Submit name of imported materials source.

D. Fill Composition Test Reports: Results of laboratory tests on proposed and actual materials used.

E. Compaction Density Test Reports.

1.06 DELIVERY, STORAGE AND HANDLING

A. When necessary, store materials on site in advance of need.

B. When fill materials need to be stored on site, locate stockpiles where indicated.

1. Separate differing materials with dividers or stockpile separately to prevent intermixing.

2. Prevent contamination.

3. Protect stockpiles from erosion and deterioration of materials.

C. Verify that survey bench marks and intended elevations for the Work are as indicated.

D. Protect plants, lawns, rock outcroppings and other features to remain.

E. Protect bench marks, survey control points, existing structures, fences, sidewalks, paving and curbs from excavating equipment and vehicular traffic.

1.07 QUALITY ASSURANCE

A. Use adequate numbers of skilled workmen who are thoroughly trained and experienced in the necessary crafts and who are completely familiar with the specified requirements and the methods needed for proper performance of the work of this Section.

B. Use equipment adequate in size, capacity and numbers to accomplish the work in a timely manner.

1.08 JOB CONDITIONS

A. Existing utilities:

1. Approximate location of certain underground lines and structures are shown on the plans for information only, other underground lines or structures are not shown.

2. Locate these and other possible unknown utility lines using electronic pipe finder, or other approved means.

3. Locate, excavate and expose all existing underground lines in advance of trenching operations.

4. The Contractor will be held responsible for the workmanlike repair of any damage done to any of these utilities in the execution of his work under this Section.

5. The Contractor shall familiarize himself with the existing conditions and be prepared to adequately care for and safeguard himself and the Owner from damage.

B. Notification of intent to excavate:

1. South Carolina Underground Utility Damage Prevention Act (S.C. Code Ann, 58-35-10, CT-SEQ, Supp. 1978) requires persons to ascertain the location of underground public utility property prior to excavation or demolition in certain situations. The Act also requires such persons to give timely notice of intent to excavate or demolish prior to commencing such operations. Failure to comply could subject the violator to a civil penalty of up to one thousand dollars ($1,000) for each violation of the Act.

   a. Notification of intent to excavate may be given by calling this toll free number: 811.

C. Protecting trees, shrubbery and lawns:

1. Trees and shrubbery in developed areas and along the trench line shall not be disturbed unless absolutely necessary and subject to the approval of the Engineer.

   a. Any such trees and shrubbery necessary to be removed shall be heeled in and replanted.

2. Where trenches cross private property through established lawns, sod shall be cut, removed, stacked and maintained in suitable condition until replacement is approved by the Engineer.

   a. Topsoil underlying lawn areas shall be removed and kept separate from general excavated materials.

D. Clearing:

1. Perform all clearing necessary for installation of the complete work.

2. Clearing shall consist of removing all trees, stumps, roots, brush and debris in the rights-of-way obtained for the Work.

3. All timber of merchantable size shall remain the property of the Owner and shall be trimmed and cut in such lengths as directed and stacked along the edge of the right-of-way.

4. All other material, including trimmings from above, shall be completely disposed of in a satisfactory manner.

E. Removing and resetting fences:

1. Where existing fences must be removed to permit construction of utilities:

a. Remove such fences and, as the Work progresses, reset the fences in their original location and condition.

b. Provide temporary fencing or other safeguards as required to prevent stock and cattle from wandering to other lands.

F. Restoration of disturbed areas:

1. Restore all areas disturbed by, during or as a result of construction activities to their existing or better condition.

2. Do not interpret this as requiring replacement of trees and undergrowth in undeveloped sections of the rights-of-way.

G. Minimizing silting and bank erosion during construction:

1. During construction, protective measures shall be taken and maintained to minimize silting and bank erosion of creeks and rivers adjacent to the work being performed during construction.

PART 2 PRODUCTS

2.01 FILL MATERIALS

A. General Fill: Subsoil excavated on-site.

1. Graded.

2. Free of lumps larger than three (3) inches, rocks larger than two (2) inches and debris.

3. Conforming to ASTM D 2487 Group Symbol CL.

B. Granular Fill - Fill Type No. 57: Coarse aggregate, conforming to State of South Carolina Highway Department standard.

C. Granular Fill - Gravel: Pit run washed stone; free of shale, clay, friable material and debris.

1. Graded in accordance with ASTM D 2487 Group Symbol GW.

2. Graded in accordance with ASTM C 136, within the following limits:

a. 2 inch sieve: 100 percent passing.

b. 1 inch sieve: 95 percent passing.

c. 3/4 inch sieve: 95 to 100 percent passing.

d. 5/8 inch sieve: 75 to 100 percent passing.

e. 3/8 inch sieve: 55 to 85 percent passing.

f. No. 4 sieve: 35 to 60 percent passing.

g. No. 16 sieve: 15 to 35 percent passing.

h. No. 40: 10 to 25 percent passing.

i. No. 200: 5 to 10 percent passing.

D. Granular Fill - Pea Gravel: Natural stone; washed, free of clay, shale and organic matter.

1. Grade in accordance with ASTM D 2487 Group Symbol GM.

2. Graded in accordance with ASTM C 136, within the following limits:

a. Minimum Size: 1/4 inch.

b. Maximum Size: 5/8 inch.

E. Sand: Natural river or bank sand; washed; free of silt, clay, loam, friable or soluble materials and organic matter.

1. Grade in accordance with ASTM D 2487 Group Symbol SW.

2. Graded in accordance with ASTM C 136; within the following limits:

a. No. 4 sieve: 100 percent passing.

b. No. 14 sieve: 10 to 100 percent passing.

c. No. 50 sieve: 5 to 90 percent passing.

d. No. 100 sieve: 4 to 30 percent passing.

e. No. 200 sieve: 0 percent passing.

F. Topsoil: Topsoil excavated on-site.

1. Select.

2. Graded.

3. Free of roots, rocks larger than 1/2 inch, subsoil, debris, large weeds and foreign matter.

4. Acidity range (pH) of 5.5 to 7.5.

5. Containing a minimum of 4 percent and a maximum of 25 percent inorganic matter.

6. Conforming to ASTM D2487 Group Symbol OH.

2.02 EXCAVATED MATERIALS

A. Perform all excavation of every description and of whatever substances encountered to depths indicated or specified.

B. Pile material suitable for backfilling in an orderly manner at safe distance from banks or trenches to avoid overloading and to prevent slides or cave-ins.

C. Remove and deposit unsuitable or excess materials as directed by the Engineer.

2.03 BACKFILL MATERIALS

A. Provide from materials excavated for installation of utility.

1. Select soil material free from organic matter and deleterious substances, containing no rocks or lumps over 2-inches in greatest dimension for backfill up to 12-inches above top of utility being covered.

2. Do not permit rocks larger than 2-inches in greatest dimension in top 6-inches of backfill.

2.04 OTHER MATERIALS

A. Provide other materials, not specifically described but required for a complete and proper installation, as selected by the Contractor subject to the approval of the Engineer.

B. Should the quantity of suitable on-site material be insufficient to complete the work, provide suitable borrow material as approved by the Engineer at no additional expense to the Owner.

C. Provide select materials from on-site if acceptable material as approved by the Engineer is available on-site. Otherwise, provide approved select material from an off-site source.

2.05 SOURCE QUALITY CONTROL

A. Where fill materials are specified by reference to a specific standard, test and analyze samples for compliance before delivery to site.

B. If tests indicate materials do not meet specified requirements, change material and retest.

C. Provide materials of each type from same source throughout the Work.

PART 3 EXECUTION

3.01 EXAMINATION

A. Verify that survey bench marks and intended elevations for the work are as indicated.

3.02 PREPARATION

A. Identify required lines, levels, contours and datum locations.

B. See Section 31 22 00 – Grading for additional requirements.

C. Locate, identify and protect utilities that remain and protect from damage.

D. Notify utility company to remove and relocate utilities.

E. Protect bench marks, survey control points, existing structures, fences, sidewalks, paving and curbs from excavating equipment and vehicular traffic.

F. Protect plants, lawns, rock outcroppings and other features to remain.

3.03 PROTECTION OF EXISTING UTILITIES AND ADJACENT STRUCTURES

A. Existing utilities:

1. Unless shown to be removed, protect active utility lines shown on the drawings or otherwise made known to the Contractor prior to trenching. If damaged, repair or replace at no additional cost to the Owner.

2. If active utility lines are encountered and are not shown on the Drawings or otherwise made known to the Contractor, promptly take necessary steps to assure that service is not interrupted.

3. If service is interrupted as a result of work under this Section, immediately restore service by repairing the damaged utility at no additional cost to the Owner.

4. If existing utilities are found to interfere with the permanent facilities being constructed under this Section, immediately notify the Engineer and secure his instructions.

5. Do not proceed with permanent relocation of utilities until written instructions are received from the Engineer.

6. Locations within streets or highways:

   a. Comply with the South Carolina Department of Transportation's (SCDOT) "Encroachment Permit" issued for the Work and the South Carolina Department of Transportation's (SCDOT) "A Policy for Accommodating Utilities on Highway Rights-of-Way".

   b. Take all precautions and comply with all requirements as may be necessary to protect the improvements, including barricades for protection of traffic.

   c. Keep minimum of one lane open to traffic at all times where utility crosses street or highway.

7. Protection of persons and property:

   a. Barricade open holes and depressions occurring as part of the Work and post warning lights on property adjacent to or with public access.

   b. Operate warning lights during hours from dusk to dawn each day and as otherwise required.

   c. Protect structures, utilities, sidewalks, pavements and other facilities from damage caused by settlement, lateral movement, washout and other hazards created by operations under this Section.

8. Dewatering:

   a. Remove all water, including rain water, encountered during trench and sub-structure work to an approved location by pumps, drains and other approved methods.

   b. Keep trenches and site construction area free from water.

9. Use means necessary to prevent dust becoming a nuisance to the public, to neighbors and to other work being performed on or near the site.

10. Maintain access to adjacent areas at all times.

3.04 TRENCHING

A. Notify Engineer of unexpected subsurface conditions and discontinue affected Work in area until notified to resume work.

B. Slope banks of excavations deeper than 4 feet to angle of repose or less until shored.

C. Do not interfere with 45 degree bearing splay of foundations.

D. Cut trenches wide enough to allow inspection of installed utilities.

E. Hand trim excavations. Remove loose matter.

F. Remove large stones and other hard matter that could damage piping or impede consistent backfilling or compaction.

G. Remove lumped subsoil, boulders and rock up to 1/3 cu. yd. measured by volume.

H. Remove excavated material that is unsuitable for re-use from site.

I. Stockpile excavated material to be re-used in area designated on site in accordance with Section 31 22 00.

J. Remove excess excavated material from site.

K. Trench Excavation:

   1. Remove all materials of whatever substance encountered.

L. Where trenching occurs in existing lawns, remove turf in sections and keep damp. Replace turf upon completion of the backfilling.

M. Open cut:

   1. Excavate for utilities by open cut.

   2. If conditions at the site prevent such open cut and if approved by the Engineer, tunneling may be used.

3. Short sections of a trench may be tunneled if, in the opinion of the Engineer, the conductor can be installed safely and backfill can be compacted properly into such tunnel.

4. Remove boulders and other interfering objects and backfill voids left by such removals, at no additional cost to the Owner.

5. Remove wet or otherwise unstable soil incapable of properly supporting the utility, as determined by the Engineer, to depth required and backfill to proper grade with stone bedding material, at no additional cost to the Owner.

6. Excavating for appurtenances:

   a. Excavate for manholes and similar structures to a distance sufficient to leave at least 12-inches clear between outer surfaces and the embankment or shoring that may be used to hold and protect the banks.

   b. Overdepth excavation beyond such appurtenances that has not been directed will be considered unauthorized. Fill with sand, gravel, or lean concrete as directed by the Engineer and at no additional cost to the Owner.

N. Trench to the minimum width necessary for proper installation of the utility, with sides as nearly vertical as possible. Accurately grade the bottom to provide uniform bearing for the utility.

1. Dig to a true grade and to provide a smooth continuous support along the entire length of the pipe line.

2. Excavate to a width not less than 12 inches greater than the outside diameter of the pipe.

3. Trench depth shall provide a minimum of 4 feet of cover over the pipe as measured along the pipe centerline.

4. Where the pipeline crosses creeks, drainage ditches or land subject to flooding, the depth of cover shall be 4' minimum.

5. Where the pipeline crosses existing gas mains or other utilities, a minimum of 24 inches of separation under the existing utility shall be maintained. Additional depth of excavation as required to maintain separation shall be completed at no additional cost to the Owner.

6. At any creek, draw, gully, embankment or other place where rough terrain exists, the trench shall be graded to avoid the use of bends or deflections greater than 2-1/2º per joint unless otherwise approved by the Engineer.

   a. Where changes in direction occur requiring greater than 2-1/2º deflection, field bending of the pipe is to be used with minimum bending radius being no less than 10 times the pipe diameter.

O. Provide sheeting and shoring necessary for protection of the Work and for the safety of personnel.

1. Remove in units when level of backfilling has reached the elevation necessary to protect the utility work and adjacent property.

2. Sheeting at the bottom of trenches over 10-feet deep for sewers 15-inches and larger in size, shall remain in place and be cut off no less than 2-inches above top of pipe, at no additional cost to the Owner.
3. When, in the opinion of the Engineer, other sheeting cannot be safely removed, it shall be left in place and the Contractor will be paid for such sheeting at the prices bid.

    a. Cut such sheeting off at least 2-feet below finished surface.

    b. No lumber for sheeting or shoring exceeding that size customarily used will be paid for unless the use of larger sizes has been ordered, in writing, by the Engineer.

P. Depressions:

1. Dig bell holes and depressions for joints after the trench has been graded. Provide uniform bearing for the pipe on prepared bottom of the trench.

2. Except where rock is encountered, do not excavate below the depth indicated or specified.

3. Where rock is encountered, excavate rock to a minimum overdepth of 4-inches below the trench depth indicated or specified and to provide 6-inches clearance in any horizontal direction from all parts of the utility and appurtenances.

Q. Comply with pertinent OSHA regulations in regards to the excavation of utilities.

3.05 PREPARATION FOR UTILITY PLACEMENT

A. Cut out soft areas of subgrade not capable of compaction in place. Backfill with general fill.

B. Compact subgrade to density equal to or greater than requirements for subsequent fill material.

C. Until ready to backfill, maintain excavations and prevent loose soil from falling into excavation.

3.06 BACKFILLING

A. Backfill to contours and elevations indicated using unfrozen materials.

B. Backfill trenches and excavations immediately after the pipes are laid, unless other protection is directed or indicated.

C. Select and deposit backfill materials with special reference to the future safety of the pipes.

D. Reopen trenches which have been improperly backfilled, to a depth as required for proper compaction. Refill and compact as specified, or otherwise correct to the approval of the Engineer.

E. Surplus material shall be disposed of as directed by the Engineer.

F. Original surface shall be restored to the approval of the Engineer.

G. Fill up to subgrade elevations unless otherwise indicated.

H. Lower portion of trench:

1. Deposit approved backfill and bedding material in layers of 6-inches maximum thickness and compact with suitable tampers to the density of the adjacent soil until there is a cover of not less than 36-inches over sewers and 12-inches over other utility lines.

2. Take special care in backfilling and bedding operations not to damage pipe and pipe coatings.

I. Remainder of trench:

1. Except for special materials for pavements, backfill the remainder of the trench with material free from stones larger than 6-inches or 1/2 the layered thickness, whichever is smaller, in any dimension.

2. Deposit backfill material in layers not exceeding the thickness specified and compact each layer to the minimum density directed by the soil engineer.

J. Undeveloped areas:

1. Backfill in wooded, swampy or undeveloped areas shall be as specified hereinbefore, except that tamping of the backfill above a level 2-feet over the top of the pipe will not be required.

2. Mound excavated material neatly over the ditch to provide for future settlements.

K. Employ a placement method that does not disturb or damage other work.

L. Systematically fill to allow maximum time for natural settlement. Do not fill over porous, wet, frozen or spongy subgrade surfaces.

M. Maintain optimum moisture content of fill materials to attain required compaction density.

N. Granular Fill: Place and compact materials in equal continuous layers not exceeding 6 inches compacted depth.

O. Soil Fill: Place and compact material in equal continuous layers not exceeding 8 inches compacted depth.

P. Slope grade away from building minimum 2 inches in 10 feet, unless noted otherwise. Make gradual grade changes. Blend slope into level areas.

Q. Correct areas that are over-excavated.

1. Thrust bearing surfaces: Fill with concrete.

2. Other areas: Use general fill, flush to required elevation, compacted to minimum 95 percent of maximum dry density.

R. Compaction Density Unless Otherwise Specified or Indicated:

1. Under paving, slabs-on-grade and similar construction: 100 percent of maximum dry density.

2. At other locations: 95 percent of maximum dry density.

S. Reshape and re-compact fills subjected to vehicular traffic.

3.07 BEDDING AND FILL AT SPECIFIC LOCATIONS

A. Use general fill unless otherwise specified or indicated.

B. Utility Piping:

1. Bedding: Use general fill.

2. Cover with general fill.

3. Fill up to subgrade elevation.

4. Compact in maximum 8 inch lifts to 95 percent of maximum dry density.

C. At Pipe Culverts:

1. Bedding: Use general fill.

2. Cover with general fill.

3. Fill up to subgrade elevation.

4. Compact in maximum 8 inch lifts to 95-percent of maximum dry density.

3.08 TOLERANCES

A. Top Surface of General Backfilling: Plus or minus 1 inch from required elevations.

3.09 FIELD QUALITY CONTROL

A. See Section 01 40 00 - Quality Requirements, for general requirements for field inspection and testing.

B. Perform compaction density testing on compacted fill in accordance with ASTM D1556, ASTM D2167, ASTM D3017, or ASTM D6938.

C. Perform compaction density testing on compacted fill in accordance with ASTM D1556, ASTM D2167, ASTM D2922, or ASTM D3017.

D. Evaluate results in relation to compaction curve determined by testing uncompacted material in accordance with ASTM D698 ("standard Proctor"), ASTM D1557 ("modified Proctor"), or AASHTO T 180.

E. If tests indicate work does not meet specified requirements, remove work, replace and retest.

F. Frequency of Tests:

1. At least one (1) field density test for every fifty (50) linear feet of trench within each lift.

3.10 CLEANING

A. Leave unused materials in a neat, compact stockpile.

B. Remove unused stockpiled materials, leave area in a clean and neat condition. Grade stockpile area to prevent standing surface water.

C. Leave borrow areas in a clean and neat condition. Grade to prevent standing surface water.

END OF SECTION

SECTION 31 23 23.13

BACKFILL AND COMPACTION

PART 1 GENERAL

1.01 SECTION INCLUDES

A. Filling, backfilling and compacting for structure volume below grade.

B. Backfilling and compacting for utilities outside the structure to utility main connections.

C. Filling holes, pits and excavations generated as a result of removal (demolition) operations.

1.02 RELATED SECTIONS

A. Documents affecting work of this Section include, but are not necessarily limited to, General Conditions, Sections in Division 01 of these Specifications.

B. Section 02 30 00 Subsurface Evaluation

C. Section 31 22 00 – Grading.

D. Section 31 23 16 - Excavation.

E. Section 31 23 16.13 – Trenching for Site Utilities

F. Section 31 25 00 - Erosion and Sedimentation Control.

G. Section 03 30 00 - Cast-in-Place Concrete.

1.03 REFERENCES

A. AASHTO T 180 - Standard Specification for Moisture-Density Relations of Soils Using a 4.54 kg (10-lb) Rammer and a 457 mm (18 in.) Drop; American Association of State Highway and Transportation Officials; 2001 (2004).

B. ASTM C 136 - Standard Test Method for Sieve Analysis of Fine and Coarse Aggregates; 2006.

C. ASTM D 698 - Standard Test Methods for Laboratory Compaction Characteristics of Soil Using Standard Effort (12,400 ft-lbf/ft3 (600 kN-m/m3)); 2000a.

D. ASTM D 1556 - Standard Test Method for Density and Unit Weight of Soil in Place by the Sand-Cone Method; 2000.

E. ASTM D 1557 - Standard Test Methods for Laboratory Compaction Characteristics of Soil Using Modified Effort (56,000 ft-lbf/ft3 (2,700 kN m/m3)); 2002

F. ASTM D 2167 - Standard Test Method for Density and Unit Weight of Soil in Place by the Rubber Balloon Method; 1994(R 2001).

G. ASTM D 2487 - Standard Practice for Classification of Soils for Engineering Purposes (Unified Soil Classification System); 2006.

H. ASTM D 2922 - Standard Test Methods for Density of Soil and Soil-Aggregate in Place by Nuclear Methods (Shallow Depth); 2005.

I. ASTM D 3017 - Standard Test Method for Water Content of Soil and Rock in Place by Nuclear Methods (Shallow Depth); 2005.

J. ASTM D 4318 - Standard Test Methods for Liquid Limit, Plastic Limit and Plasticity Index of Soils; 2005.

1.04 DEFINITIONS

A. Finish Grade Elevations: Indicated on drawings.

B. Subgrade Elevations: Indicated on drawings.

C. Open areas: Open areas shall be those areas that do not include building sites, paved areas, street right-of-way and parking areas.

D. Maximum density: Maximum weight in pounds per cubic foot of a specific material.

E. Optimum moisture: Percentage of water in a specific material at maximum density.

F. Muck: Materials unsuitable for foundation because of organic content, saturation to the extent that it is somewhat fluid and must be moved by dragline, dredge, or other special equipment, are designated as muck. No extra payment will be made for muck removal.

G. Unsuitable material: Unsuitable material is defined as earth material unsatisfactory for its intended use and as classified by the soils technicians. In addition to organic matter, sod, muck, roots and rubbish, highly plastic clay soils of the CH and MH descriptions and organic soils of the OL and OH descriptions, as defined in the Unified Soil Classification System shall be considered as unsuitable material.

H. Suitable material: Where the term suitable material is used in specification sections pertaining to earthwork, it means earth or materials designated as being suitable for their intended use by soils technicians or the Engineer. Suitable material shall be designated as meeting the requirements of the Unified Soil Classification System types SW, GW, GC, SC, SM, ML, Cl or as designated in these specifications.

I. Select material: Select material is defined as granular material to be used where indicated on the drawings or where specified herein consisting of soils conforming to the Unified Soil Classification types SW, SM, GW, or GM or as otherwise approved by the Engineer as select fill. Select material shall contain no stones or rubble larger than 1-1/2 inches in diameter.

J. Crushed stone (gravel): Crushed stone shall be No. 57 aggregate or equal conforming to ASTM C 33.

1.05 SUBMITTALS

A. See Section 01 30 00 - Administrative Requirements, for submittal procedures.

B. Samples: 10 lb (4.5 kg) sample of each type of fill; submit in air-tight containers to testing laboratory.

C. Materials Sources: Submit name of imported materials source.

D. Fill Composition Test Reports: Results of laboratory tests on proposed and actual materials used.

E. Compaction Density Test Reports.

1.06 PROJECT CONDITIONS

A. Provide sufficient quantities of fill to meet project schedule and requirements. When necessary, store materials on site in advance of need.

B. When fill materials need to be stored on site, locate stockpiles where indicated.

1. Separate differing materials with dividers or stockpile separately to prevent intermixing.

2. Prevent contamination.

3. Protect stockpiles from erosion and deterioration of materials.

C. Verify that survey bench marks and intended elevations for the Work are as indicated.

1.07 QUALITY ASSURANCE

A. Use adequate numbers of skilled workmen who are thoroughly trained and experienced in the necessary crafts and who are completely familiar with the specified requirements and the methods needed for proper performance of the work of this Section.

B. Comply with requirements of governmental agencies having jurisdiction.

C. Testing: A testing laboratory, retained by the Contractor and approved by the Owner, will make such tests as are deemed advisable. Test as specified in Section 01 45 29, Testing Laboratory Services.

1. Schedule fill and backfill operations so as to permit a reasonable time for inspection and testing before placing succeeding lifts and keep the laboratory and Engineer informed of progress.

2. Notify the Engineer and allow sufficient time for observation and/or testing of foundation subgrades prior to commencing any work on the exposed excavation.

1.08 JOB CONDITIONS

A. Comply with pertinent provisions of Section 01 60 00 – Product Requirements.

PART 2 PRODUCTS

2.01 SOIL MATERIAL GENERAL

A. Soil material used as fill, backfill or subgrade for structures shall consist of suitable material.

1. Provide suitable material free from organic matter and deleterious substances, containing no rocks or lumps over 6 inches in greatest dimension and with not more than 15% of the rocks or lumps larger than 2-1/2 inches in their greatest dimension.

2. Do not permit rocks having a dimension greater than 1 inch in the upper 6 inches of fill or subgrade.

B. Where select material is indicated on the drawings or specified, use select granular material as defined herein and approved by the Engineer.

C. Where indicated on the drawings or specified, use gravel or crushed stone as defined herein.

D. Where indicated on the drawings or otherwise where desired, provide a lean concrete "mud slab" beneath foundations.

E.

1. Use 2000 psi concrete and a minimum thickness of 2-1/2 inches.

2. With prior approval of the Engineer, a "mud slab" may be substituted for gravel base material except where the gravel base is required for drainage or for use with pressure relief valves.

2.02 FILL MATERIALS

A. General Fill: Subsoil excavated on-site.

1. Graded.

2. Free of lumps larger than 3 inches (75 mm), rocks larger than 2 inches (50 mm) and debris.

3. Conforming to ASTM D 2487 Group Symbol CL.

B. Granular Fill- Fill Type #57: Coarse aggregate, conforming to State of South Carolina Highway Department standard.

2.03 SOURCE QUALITY CONTROL

A. See Section 01 40 00 - Quality Requirements, for general requirements for testing and analysis of soil material.

B. If tests indicate materials do not meet specified requirements, change material and retest.

C. Provide materials of each type from same source throughout the Work.

PART 3 EXECUTION

3.01 EXAMINATION

A. Identify required lines, levels, contours and datum locations.

3.02 PREPARATION

A. Scarify subgrade surface to a depth of 6 inches (150 mm) to identify soft spots.

B. Cut out soft areas of subgrade not capable of compaction in place. Backfill with general fill.

C. Compact subgrade to density equal to or greater than requirements for subsequent fill material.

D. Until ready to fill, maintain excavations and prevent loose soil from falling into excavation.

3.03 FILLING AND BACKFILLING

A. Fill to contours and elevations indicated using unfrozen materials.

B. Employ a placement method that does not disturb or damage other work.

C. Systematically fill to allow maximum time for natural settlement. Do not fill over porous, wet, frozen or spongy subgrade surfaces.

D. Maintain optimum moisture content of fill materials to attain required compaction density.

E. Slope grade away from building minimum 2 inches in 10 ft (50 mm in 3 m), unless noted otherwise. Make gradual grade changes. Blend slope into level areas.

F. Correct areas that are over-excavated.

1. Other areas: Use general fill, flush to required elevation, compacted to minimum 98 percent of maximum dry density.

G. Compaction Density Unless Otherwise Specified or Indicated.

H. Reshape and re-compact fills subjected to vehicular traffic.

I. Use suitable material for all filling and backfilling operations.

J. Fill under structures: Deposit suitable material in layers not exceeding 8" in depth and compact each layer using proper equipment.

K.

1. Do not place rock that will not pass through a 6-inch diameter ring within the top 12" of the surface of the completed fill or rock that will not pass through a 3-inch diameter ring within the top 6 inches of the completed fill.

2. Do not place broken concrete, bricks, or asphaltic pavement in fills.

3. Where indicated on the drawings, provide select granular material.

L. Backfill excavations as promptly as progress of the Work permits, but not until completion of the following:

1. Inspection and acceptance of construction below finish grade including, where applicable, damp proofing and waterproofing.

2. Inspecting, testing, approving and recording locations of underground utilities.

3 Removing concrete formwork.

4 Removing shoring and bracing and backfilling of voids with satisfactory materials.

5 Removing trash and debris.

6. Foundation walls have been in place seven days.

M. Placing and compacting:

1. Place backfill and fill materials in layers not more than 8 inches in loose depth.

2. Before compacting, moisten or aerate each layer as necessary to provide the optimum moisture content within ±2%.

3. Compact each layer to required percentage of maximum density for area.

4. Do not place backfill or fill material on surfaces that are muddy, frozen, or containing frost or ice.

5. Place backfill and fill materials evenly adjacent to structures, to required elevations.

6. Take care to prevent wedging action of backfill against structures by carrying the material uniformly around the structure to approximately the same elevation in each lift.

7. Do not operate heavy equipment closer to foundation or retaining walls than a distance equal to height of backfill above the footing.

   a. Compact remaining area using power driven hand tampers.

8. Where the construction includes basement or other underground walls having structural floors over them, do not backfill such walls until the structural floors are in place and have attained sufficient strength to support the walls.

3.04 FILL AT SPECIFIC LOCATIONS

A. Over Buried Utility Piping, Conduits and Duct Bank in Trenches:

1. Bedding: Use general fill.

2. Cover with general fill.

3. Fill up to subgrade elevation.

4. Compact in maximum 8 inch (200 mm) lifts to 95 percent of maximum dry density.

B. At Lawn Areas:

1. Use general fill.

2. Fill up to 6 inches (150 mm) below finish grade elevations.

3. Fill up to subgrade elevations.

4. Compact to 95 percent of maximum dry density.

5. See Section 31 22 00 - Grading for topsoil placement.

3.05 COMPACTION REQUIREMENTS

A. Compact soils to not less than the following percentages of maximum dry density as determined in accordance with ASTM D698, Method A (Standard Proctor).

B. Existing in place subgrade below structures where subgrade has been disturbed by water, improper dewatering, or construction traffic.

1. Top 12 inches of subgrade: 100%

2. Below top 12 inches of subgrade: 98%

C. Fill beneath structures and beneath an area extending 10 feet beyond the limits of the foundation:

1. Top 12 inches of subgrade: 100%

2. Below top 12 inches of subgrade: 98%

D. Compaction of suitable material used to replace unsuitable material below foundation subgrades:

1. Top 12 inches of subgrade: 100%

2. Below top 12 inches of subgrade: 98%

3.06 BACKFILLING, FILLING AND COMPACTION

A. Use suitable material for all filling and backfilling operations.

B. Fill under structures: Deposit suitable material in layers not exceeding 8 inches in depth and compact each layer using proper equipment.

1. Do not place rock that will not pass through a 6-inch diameter ring within the top 12 inches of the surface of the completed fill or rock that will not pass through a 3-inch diameter ring within the top 6 inches of the completed fill.

2. Do not place broken concrete, bricks, or asphaltic pavement in fills.

3. Where indicated on the drawings, provide select granular material.

C. Backfill excavations as promptly as progress of the Work permits, but not until completion of the following:

1. Inspection and acceptance of construction below finish grade including, where applicable, damp proofing and waterproofing.

2. Inspecting, testing, approving and recording locations of underground utilities.

3. Removing concrete formwork.

4. Removing shoring and bracing and backfilling of voids with satisfactory materials.

5. Removing trash and debris.

6. Foundation walls have been in place seven days.

D. Placing and compacting:

1. Place backfill and fill materials in layers not more than 8 inches in loose depth.

2. Before compacting, moisten or aerate each layer as necessary to provide the optimum moisture content within ±2%.

3. Compact each layer to required percentage of maximum density for area.

4. Do not place backfill or fill material on surfaces that are muddy, frozen, or containing frost or ice.

5. Place backfill and fill materials evenly adjacent to structures, to required elevations.

6. Take care to prevent wedging action of backfill against structures by carrying the material uniformly around the structure to approximately the same elevation in each lift.

7. Do not operate heavy equipment closer to foundation or retaining walls than a distance equal to height of backfill above the footing.

   a. Compact remaining area using power driven hand tampers.

8. Where the construction includes basement or other underground walls having structural floors over them, do not backfill such walls until the structural floors are in place and have attained sufficient strength to support the walls.

3.07 TOLERANCES

A. Top Surface of General Backfilling: Plus or minus 1 inch (25 mm) from required elevations

3.08 FIELD QUALITY CONTROL

A. See Section 01 40 00 - Quality Requirements, for general requirements for field inspection and testing.

B. Secure the Engineer's construction observation and approval of subgrades and fill layers before subsequent construction is permitted thereon.

C. Perform compaction density testing on compacted fill in accordance with ASTM D1556, ASTM D2167, ASTM D2922, or ASTM D3017.

D. Evaluate results in relation to compaction curve determined by testing uncompacted material in accordance with ASTM D 698 ("standard Proctor"), ASTM D 1557 ("modified Proctor"), or AASHTO T 180.

E. If tests indicate work does not meet specified requirements, remove work, replace and retest.

F. <u>Frequency of Tests:</u>

   1. At areas to receive paving, at least one field density test for every 5,000 sq.ft. of subgrade area, but not less than three (3) tests.

   2. In each compacted fill layer, one field density test for every 5,000 sq.ft. of overlaying paved area, but not less than three (3) tests.

   3. In fill beneath structures, one field density test for every 2,500 sq.ft. in each layer.

   4. Other tests as deemed necessary by the Engineer

G. If, the Engineer's opinion based on reports of the testing laboratory, subgrade or fills that have been placed are below specified density, provide additional compacting and testing until specified requirements are met.

1. Additional testing will be provided by the Owner's selected testing laboratory and all costs for the additional testing will be borne by the Contractor.

H. Proofrolling:

1. Upon request by the Engineer, proofroll the subgrade of structure foundations.

a. Make not less than three (3) passes of a 25 to 50 ton rubber tired roller over the full area.
b. Unstable, soft or otherwise unsuitable materials revealed by the proofrolling shall be removed and replaced with satisfactory material and compacted as specified herein.

3.09 DEWATERING

A. Remove all surface and subsurface waters from excavations and maintain the excavation in a dry condition during construction operations.

B. Maintain the water level below the excavation subgrade during excavation and construction.

1. Material disturbed below the foundation subgrade due to improper dewatering shall be removed and replaced with crushed stone or lean concrete at no expense to the Owner.

2. Use sumps, pumps, drains, trenching or well point system as necessary to maintain a dry excavation.

3. Dewatering by trench pumping will not be permitted if migration of fine grained natural material (running sand) from bottom, side walls or bedding material will occur.

C. Dispose of water pumped from excavations in storm drains having capacity, canals, trenches or other approved locations.

1. Contractor is responsible for acquiring all permits required to discharge the water and shall protect waterways from turbidity during the operation.

2. Prevent flooding of streets, roadways, or private property.

3. Provide engines driving dewatering pumps with residential type mufflers.

3.10 CLEAN-UP

A. Leave unused materials in a neat, compact stockpile.

B. Leave borrow areas in a clean and neat condition. Grade to prevent standing surface water.

1. Unstable, soft or otherwise unsuitable materials revealed by the proofrolling shall be removed and replaced with satisfactory material and compacted as specified herein.

C. Remove unused stockpiled materials, leave area in a clean and neat condition. Grade stock

3.11 MEASUREMENT AND PAYMENT

A. No separate measurement or direct payment will be made for the work under this section and all costs for same shall be included in the lump sum bid.

END OF SECTION

SECTION 31 25 00

EROSION AND SEDIMENTATION CONTROLS

PART 1 GENERAL

1.01 DESCRIPTION

A. Work included: Implement, Protect, Comply and Enforce the Department of Health and Environmental Control approved construction stormwater pollution prevention plan (C-SWPPP) during the construction of this project to reduce soil erosion and siltation to the lowest reasonably achievable level.

1.02 GENERAL

A. Exercise every reasonable precaution, throughout the life of the project, to prevent the eroding of soil and the silting of rivers, streams, lakes, reservoirs, other water impoundments, ground or roadway surfaces, or other property. Erosion control practices to be used for this project are shown on the drawings and are to conform to South Carolina Department of Health and Environmental Control regulations.

PART 2 PRODUCTS

2.01 CRUSHED STONE

A. Provide #57 crushed stone for project entrance and exit.

B. Provide #57 crushed stone for temporary sediment barriers around inlets and for temporary stone check dams.

2.02 GRASSING

A. Comply with Section 32 92 00 – Turf and Grasses.

2.03 SILT FENCE

A. Posts:

1. Posts shall be self-fastener angle steel, 5' in length.

B. Woven wire shall conform to the requirements of ASTM A 116, Class I zinc coating for wire. Each woven square shall measure 5.33" X 12". The top and bottom wires shall be 10 gauge. All other wires shall be 12-1/2 gauge.

C. Filter fabric shall be synthetic fabric as manufactured by Celanese Fibers Co., DuPont, Industrial Netting or approved equal.

2.04 EROSION CONTROL BLANKET

A. Use erosion control blanket S150 if North American Green, or similar products by profile products, or approved equal.

2.05 RIP-RAP

A. Comply with Section 31 37 00 - Rip-Rap.

2.06 FILTER FABRIC (Temporary Stone Check Dam)

A. Use Stabilenka Filter Fabric (T-140N), Mirafil (140N) or approved equal.

PART 3 EXECUTION

3.01 GENERAL

A. Construct and maintain all erosion control measures until the substantial completion of the project.

3.02 TEMPORARY CONSTRUCTION ENTRANCE/EXIT

A. Construct a gravel area or pad at points where vehicles enter and leave a construction site.

B. Clear the entrance and exit area of all vegetation, roots and other objectionable material and properly grade and place gravel to the grade and dimensions shown on the plans.

C. Construct drainage channels to carry water to a sediment trap or other suitable outlet.

D. Use geotextile fabrics to improve stability of the foundation in locations subject to seepage or high water table.

E. Maintain the gravel pad in a condition to prevent mud or sediment from leaving the construction site by periodic top dressing with two inches of stone.

F. After each rainfall, inspect any structure used to trap sediment and clean it out as necessary.

G. Immediately remove objectionable materials spilled, washed, or tracked onto public roadways.

3.03 TEMPORARY GRASSING

A. Provide a temporary cover for erosion control on disturbed areas that will remain unstabilized for a period of more than thirty (30) days in accordance with Section 32 92 00 – Turf and Grasses.

B. This practice applies to cleared areas, diversions, dams, temporary sediment basins, temporary road banks and topsoil stockpiles where vegetation is needed for less than one (1) year.

C. Provide grassing on slope 5% or greater within fourteen (14) days of disturbance. Comply with Section 32 92 00 – Turf and Grasses.

3.04 SILT FENCE

A. Provide silt fence barrier where shown on the plans and on utility construction parallel to the disturbed trench where perpendicular sheet flow runoff occurs on disturbed areas with slopes greater than 4%.

B. Place at the extreme limits of the area to be disturbed as shown on the plans.

C. Construct temporary sediment barriers of filter fabric, buried at the bottom, stretched and supported by posts and install below small disturbed areas as indicated on the drawings to retain sediment by reducing the flow velocity to allow sediment deposition.

D. Provide spacing between posts 5'-0" on center, minimum.

E. Remove sediment deposits prior to reaching one-third height of the fence.

F. Monitor site frequently and place additional silt fencing should evidence indicate that erosion is about to occur at locations other than those shown on plan.

3.05 INLET PROTECTION

A. Construct temporary sediment barriers around storm drain curb inlets using block and gravel as indicated on the drawings.

B. Inspect structure after each rainfall and repair as required.

C. Remove sediment when trap reaches one-half capacity.

D. Remove structure when protected areas have been stabilized.

3.06 EROSION CONTROL BLANKET

A. Provide on areas as shown on the plans or on all embankments with slopes equal to or steeper than 2-1/2:1.

3.07 TEMPORARY STONE CHECK DAMS

A. Utilize temporary stone check dams as indicated on the plans or directed by Engineer.

B. Provide temporary stone check dams constructed of both rip-rap and #57 stone, as illustrated on the plans.

3.08 MAINTENANCE

A. Place all erosion control devices or measures prior to any land disturbing activity within the drainage area they are located.

B. Periodically check erosion control devices and clean or otherwise remove silt build-up as necessary to maintain them in proper working order.

3.09 REMOVAL

A. Remove temporary structures after protected areas have been stabilized.

3.10 MEASUREMENT AND PAYMENT

A. No separate measurement or direct payment will be made for the work under this Section and all costs for same shall be included in the lump sum bid.

END OF SECTION

SECTION 32 11 23

AGGREGATE BASE COURSE

PART 1 GENERAL

1.01 SECTION INCLUDES

A. Stone Base Course.

B. Paving aggregates.

1.02 RELATED REQUIREMENTS

A. Documents affecting work of this Section include, but are not necessarily limited to Sections in Division 1 of these Specifications.

B. Section 31 22 00 - Grading: Preparation of site for base course.

C. Section 31 23 23.13 – Backfill and Compaction: Topsoil fill at areas adjacent to aggregate base course.

D. Section 31 23 16.13 – Trenching for Site Utilities: Compacted fill over utility trenches under base course.

E. Section 32 13 13 - Bituminous Concrete Paving: Binder and finish asphalt courses.

1.03 REFERENCE STANDARDS

A. AASHTO M 147 - Standard Specification for Materials for Aggregate and Soil-Aggregate Subbase, Base and Surface Courses; American Association of State Highway and Transportation Officials; 1965 (2012).

B. AASHTO T 180 - Standard Specification for Moisture-Density Relations of Soils Using a 4.54 kg (10-lb) Rammer and a 457 mm (18 in.) Drop; American Association of State Highway and Transportation Officials; 2010

C. ASTM C136 - Standard Test Method for Sieve Analysis of Fine and Coarse Aggregates; 2006.

D. ASTM D698 - Standard Test Methods for Laboratory Compaction Characteristics of Soil Using Standard Effort (12,400 ft-lbf/ft3 (600 kN-m/m3)); 2012.

E. ASTM D1556 - Standard Test Method for Density and Unit Weight of Soil in Place by the Sand-Cone Method; 2007.

F. ASTM D1557 - Standard Test Methods for Laboratory Compaction Characteristics of Soil Using Modified Effort (56,000 ft-lbf/ft3 (2,700 kN m/m3)); 2012.

G. ASTM D2167 - Standard Test Method for Density and Unit Weight of Soil in Place by the Rubber Balloon Method; 2008.

H. ASTM D2487 - Standard Practice for Classification of Soils for Engineering Purposes (Unified Soil Classification System); 2011.

I. ASTM D 2922 - Standard Test Methods for Density of Soil and Soil-Aggregate in Place by Nuclear Methods (Shallow Depth); 2005.

J. ASTM D3017 - Standard Test Method for Water Content of Soil and Rock in Place by Nuclear Methods (Shallow Depth); 2005.

K. ASTM D4318 - Standard Test Methods for Liquid Limit, Plastic Limit and Plasticity Index of Soils; 2010.

1.04 QUALITY ASSURANCE

A. Use adequate numbers of skilled workmen who are thoroughly trained and experienced in the necessary crafts and who are completely familiar with the specified requirements and the methods needed for proper performance of the work of this Section.

1.05 PRODUCT HANDLING

A. Comply with pertinent provisions of Section 01 60 00 – Product Requirements.

1.06 SUBMITTALS

A. See Section 01 30 00 - Administrative Requirements, for submittal procedures.

B. Samples: 10 lb. sample of each type of aggregate; submit in air-tight containers to testing laboratory.

C. Materials Sources: Submit name of imported materials source.

D. Aggregate Composition Test Reports: Results of laboratory tests on proposed and actual materials used.

E. Compaction Density Test Reports.

1.07 DELIVERY, STORAGE AND HANDLING

A. When necessary, store materials on site in advance of need.

B. Aggregate Storage, General:

1. Separate differing materials with dividers or stockpile separately to prevent intermixing.

2. Prevent contamination.

3. Protect stockpiles from erosion and deterioration of materials.

C. Verify that survey benchmarks and intended elevations for the Work are as indicated.

PART 2 PRODUCTS

2.01 MATERIALS

A. Coarse Aggregate Type retained on No. 4 sieve: Coarse aggregate, conforming to State of South Carolina Highway Department standards.

1. Furnish a coarse aggregate consisting of hard, durable particles of stone, reasonably free from soft, thin, elongated or laminated pieces and deleterious substances.

2. Furnish aggregate with an abrasion loss of less than 65% as measured by the Los Angeles Abrasion Test.

B. Fine Aggregate: Natural river or bank sand; washed; free of silt, clay, loam, friable or soluble materials and organic matter.

1. Furnish a fine aggregate consisting of material produced by stone crushing operations.

2. Liquid limit shall not exceed 25 and the plasticity index shall not exceed 6 when tested in accordance with AASH TO T-89 and T-90, respectively.

3. Grade in accordance with ASTM D2487 Group Symbol SW.

4. Graded in accordance with ASTM C136; within the following limits:

a. No. 4 sieve: 100 percent passing.

b. No. 14 sieve: 10 to 100 percent passing.

c. No. 50 sieve: 5 to 90 percent passing.

d. No. 100 sieve: 4 to 30 percent passing.

e. No. 200 sieve: 0 percent passing.

C. Composite Mixture:

1. Produce in one crushing operation or by blending the fine and coarse aggregate in proper proportions.

2. Graded in accordance with ASTM C136; within the following limits:

a.	No. 2-0" Sieve	100 Percent Passing
b.	No. 1-1/2" Sieve	95-100 Percent Passing
c.	No. 1-0" Sieve	70-100 Percent Passing
d.	No. 0-1/2" Sieve	48-75 Percent Passing
e.	No. 4 Sieve	30-50Percent Passing
f.	No. 30 Sieve	11-30 Percent Passing
g.	No. 200 Sieve	0-12 Percent Passing
h.	Liquid Limit	25 max.
i.	Plasticity Index	6 max.

D. Provide Aggregate Type Materials that comply with Section 305 of the South Carolina Department of Transportation Standard Specifications for Highway Construction, Latest Edition.

2.02 SOURCE QUALITY CONTROL

A. See Section 01 40 00 - Quality Requirements, for general requirements for testing and analysis of aggregate materials.

B. Where aggregate materials are specified using ASTM D2487 classification, test and analyze samples for compliance before delivery to site.

C. Where aggregate materials are specified using ASTM D2487 classification, testing of samples for compliance will be provided before delivery to site.

D. If tests indicate materials do not meet specified requirements, change material and retest.

E. Provide materials of each type from same source throughout the Work.

2.03 PRIME ASPHALT

A. Use either MC-30, RC-30, RC-70, or EA-P complying with requirements of Sections 406, 407 and 408 of the South Carolina Department of Transportation specifications.

PART 3 EXECUTION

3.01 EXAMINATION

A. Verify that survey bench marks and intended elevations for the work are as indicated.

B. Verify substrate has been inspected, gradients and elevations are correct and is dry.

3.02 PREPARATION

A. Correct irregularities in substrate gradient and elevation by scarifying, reshaping and recompacting.

B. Do not place aggregate on soft, muddy, or frozen surfaces.

C. Proofroll all areas to receive crushed stone paving.

1. Make not less than three passes over the full area, using a 35 to 50 ton rubber tired roller.

D. Remove all soft, unstable or unsuitable material that will not compact readily.

1. Remove to full depth of unsuitable material, or to a depth of 30-inches, whichever is less.

2. Replace with satisfactory materials.

E. Fill all holes, ruts or depressions which develop in the subgrade with approved on-site material, bringing subgrade to indicated line and grades.

F. Compact subgrade using suitable construction procedures to provide not less than 95% Standard Proctor Maximum Dry Density.

G. Seal roll the subgrade surface with a steel wheel roller, sealing the surface against excessive water infiltration.

H. Preparation of Subgrade

1. Proofroll all areas to receive crushed stone paving.

a. Make not less than three passes over the full area, using a 35 to 50 ton rubber tired roller.

2. Remove all soft, unstable or unsuitable material that will not compact readily.

a. Remove to full depth of unsuitable material, or to a depth of 30-inches, whichever is less.

b. Replace with satisfactory materials.

3. Fill all holes, ruts or depressions which develop in the subgrade with approved on-site material, bringing subgrade to indicated line and grades.

4. Compact subgrade using suitable construction procedures to provide not less than 95% Standard Proctor Maximum Dry Density.

5. Seal roll the subgrade surface with a steel wheel roller, sealing the surface against excessive water infiltration.

3.03 INSTALLATION

A. Spread aggregate over prepared substrate to a total compacted thickness of 6 inches.

B. Under Bituminous Concrete Paving:

1. Compact to 95 percent of maximum dry density.

C. Place aggregate in maximum 4-inch layers and roller compact to specified density.

D. Place aggregates using spreader boxes or other approved spreaders uniformly on one operation.

E. Take care to avoid segregation of the fine from the coarse aggregate during handling, spreading or shaping operations.

F. Mix, while at proper moisture, with motor grader or other equipment and maintain to required section and grade until thoroughly compacted.

G. Level and contour surfaces to elevations and gradients indicated.

H. Add small quantities of fine aggregate to coarse aggregate as appropriate to assist compaction.

I. Add water to assist compaction. If excess water is apparent, remove aggregate and aerate to reduce moisture content.

J. Perform using 3-wheel steel wheel roller weighing not less than 10-tons, tandem roller weighing at least 8-tons, or other rollers approved by the Engineer.

K. Start rolling at edges and proceed toward the center, continue rolling until aggregates are firmly keyed or set.

L. When initial compaction is completed, should voids remain, place fine aggregates on the surface in an amount only sufficient to fill the voids.

M. Broom, wet and roll until coarse aggregate is set, bonded and thoroughly compacted for full width and depth.

N. Use mechanical tamping equipment in areas inaccessible to compaction equipment.

O. Apply herbicide to finished surface.

3.04 TOLERANCES

A. Thickness tolerance: Provide the compacted thicknesses shown on the Drawings within a tolerance of minus 1/2-inch.

1. Depth measurements will be made by digging through the base at intervals no closer than 250-feet, nor greater than 500-feet apart.

2. Where thickness is less than depth specified minus 1/2-inch, it shall be corrected as directed by the Engineer.

B. Variation From Design Elevation: Within 3/8- inch in 10-feet, parallel to the center line of the roadway nor more than 1/2-inch from a template conforming to the cross-sections illustrated on the Construction Plans.

C. Deviations: Correct by removing materials, replacing with new materials and reworking or recompacting as required.

3.05 FIELD QUALITY CONTROL

A. Compaction density testing will be performed on compacted aggregate base course in accordance with ASTM D1556.

B. Compaction density testing will be performed on compacted aggregate base course in accordance with South Carolina Department of Transportation Standard Specifications for Highway Construction, Latest Edition.

C. Results will be evaluated in relation to compaction curve determined by testing uncompacted material in accordance with ASTM D698 ("standard Proctor").

D. If tests indicate work does not meet specified requirements, remove work, replace and retest.

E. Proof roll compacted aggregate at surfaces that will be under slabs-on-grade.

F. Allow no traffic on surface until mixture has hardened sufficiently to prevent distortion.

3.06 PLACING PRIME COAT

A. Allow base course to season sufficiently to permit uniform penetration.

B. Do not apply to wet surfaces or when the temperature is below 60ºF in the shade and falling, or below 55ºF in the shade and rising.

C. Clean surfaces of all dust, dirt, clay, etc. using mechanical brooms, etc.

D. Apply prime material, using pneumatic mounted distributors, at a rate of 0.25 to 0.30 gallon per square yard.

E. Permit no traffic on primed surfaces until bituminous material has penetrated and dried sufficiently that it does not pick up under traffic.

3.07 CLEANING

A. Leave unused materials in a neat, compact stockpile.

B. Remove unused stockpiled materials, leave area in a clean and neat condition. Grade stockpile area to prevent standing surface water.

C. Leave borrow areas in a clean and neat condition. Grade to prevent standing surface water.

D. Allow no traffic on surface until mixture has hardened sufficiently to prevent distortion.

END OF SECTION

SECTION 32 13 13

BITUMINOUS CONCRETE PAVING

PART 1 GENERAL

1.01 SECTION INCLUDES

A. Aggregate base course.

B. Single course asphaltic concrete paving.

C. Double course bituminous concrete paving.

D. Surface sealer.

1.02 RELATED REQUIREMENTS

A. Documents affecting work of this Section include, but are not necessarily limited to, General Conditions, and Sections in Division 1 of these Specifications.

B. Section 31 22 00 - Grading.

C. Section 31 23 23.13 – Backfill and Compaction.

D. Section 32 11 23 - Aggregate Base Course.

1.03 REFERENCE STANDARDS

A. AI MS-2 - Mix Design Methods for Asphalt Concrete and Other Hot-Mix Types; The Asphalt Institute; 1997.

B. AI MS-19 - A Basic Asphalt Emulsion Manual; The Asphalt Institute; Fourth Edition.

C. ASTM D946 - Standard Specification for Penetration-Graded Asphalt Cement for Use in Pavement Construction; 2009a.

1.04 QUALITY ASSURANCE

A. Perform Work in accordance with State of South Carolina Department of Transportation Highways standard.

B. Mixing Plant: Conform to State of South Carolina Department of Transportation Highways standard.

C. Obtain materials from same source throughout.

D. Use adequate numbers of skilled workmen who are thoroughly trained and experienced in the necessary crafts and who are completely familiar with the specified requirements and the methods needed for proper performance of the work of this Section.

1.05 REGULATORY REQUIREMENTS

A. Conform to applicable code for paving work on public property.

1.06 SUBMITTALS

A. Comply with pertinent provisions of Section 01 30 00 – Administrative Requirements.

B. Product data: Within fourteen (14) calendar days after the Contractor has received the Owner's Notice to Proceed, submit:

1. Materials list of items proposed to be provided under this Section.

2. Certificates, signed by the materials producer and the asphalt paving Subcontractor, stating that materials meet or exceed the specified requirements.

1.07 PRODUCT HANDLING

A. Comply with pertinent provisions of Section 01 60 00 – Product Requirements.

1.08 FIELD CONDITIONS

A. Do not place asphalt when ambient air or base surface temperature is less than 40 degrees F in the shade and falling, or below 35ºF in the shade and rising, or if surface is wet or frozen.

B. Place bitumen mixture when temperature is not more than 15 F degrees below bitumen supplier's bill of lading and not more than maximum specified temperature.

PART 2 PRODUCTS

2.01 MATERIALS

A. Asphalt Cement: ASTM D946.

B. All Materials: In accordance with State of South Carolina Department of Transportation Highways standards.

C. All Materials: In accordance with State of South Carolina Department of Transportation Standard Specifications for Highway Construction, latest Edition.

D. Aggregate for Base Course: Angular crushed washed stone; free of shale, clay, friable material and debris.

1. Graded in accordance with ASTM D2487 Group Symbol GW.

2. Graded in accordance with ASTM C136, within the following limits:

a. 2 inch sieve: 100 percent passing.

b. 1 inch sieve: 95 percent passing.

c. 3/4 inch sieve: 95 to 100 percent passing.

d. 5/8 inch sieve: 75 to 100 percent passing.

e. 3/8 inch sieve: 55 to 85 percent passing.

f. No. 4 sieve: 35 to 60 percent passing.

g. No. 16 sieve: 15 to 35 percent passing.

h. No. 40: 10 to 25 percent passing.

i. No. 200: 5 to 10 percent passing.

E. Aggregate for Binder Course: Angular crushed washed stone; free of shale, clay, friable material and debris.

1. Graded in accordance with ASTM D2487 Group Symbol GW.

2. Graded in accordance with ASTM C136, within the following limits:

a. 2 inch sieve: 100 percent passing.

b. 1 inch sieve: 95 percent passing.

c. 3/4 inch sieve: 95 to 100 percent passing.

d. 5/8 inch sieve: 75 to 100 percent passing.

e. 3/8 inch sieve: 55 to 85 percent passing.

f. No. 4 sieve: 35 to 60 percent passing.

g. No. 16 sieve: 15 to 35 percent passing.

h. No. 40: 10 to 25 percent passing.

i. No. 200: 5 to 10 percent passing.

F. Fine Aggregate: In accordance with State of South Carolina Department of Transportation Highways standards.

G. Mineral Filler: Finely ground particles of limestone, hydrated lime or other mineral dust, free of foreign matter.

H. Primer: In accordance with State of South Carolina Department of Transportation Highways standards.

I. Tack Coat: Homogeneous, medium curing, liquid asphalt.

2.02 ASPHALT PAVING MIXES AND MIX DESIGN

A. Use dry material to avoid foaming. Mix uniformly.

B. Base Course: 3.0 to 6 percent of asphalt cement by weight in mixture in accordance with AI MS-2.

C. Binder Course: 4.5 to 6 percent of asphalt cement by weight in mixture in accordance with AI MS-2.

D. Submit proposed mix design of each class of mix for review prior to beginning of work.

2.03 ASPHALTIC CONCRETE MIXTURE (BINDER COURSE)

A. Materials and composition of mixture shall comply with Section 402 of the SCDOT's "Standard Specifications for Type 1 Mix".

B. Provide hot plant mixed asphaltic concrete paving materials.

1. Temperature leaving the plant: 290ºF minimum, 320ºF maximum.

2. Temperature at time of placing: 280ºF minimum.

2.04 ASPHALTIC CONCRETE MIXTURE (SURFACE COURSE)

A. Materials and composition of mixture shall comply with Section 403 of the SCDOT's "Standard Specifications for Type B Mix."

B. Provide hot plant mixed asphaltic concrete paving materials.

1. Temperature leaving the plant: 290ºF minimum, 320ºF maximum.

2. Temperature at time of placing: 280ºF minimum.

2.05 EQUIPMENT

A. Comply with requirements of Section 401 of SCDOT's "Standard Specifications".

2.06 SOURCE QUALITY CONTROL

A. Test mix design and samples in accordance with AI MS-2.

PART 3 EXECUTION

3.01 EXAMINATION

A. Verify that compacted subgrade is dry and ready to support paving and imposed loads.

B. Verify gradients and elevations of base are correct.

3.02 SURFACE CONDITIONS

A. Examine the areas and conditions under which work of this Section will be performed. Correct conditions detrimental to timely and proper completion of the Work. Do not proceed until unsatisfactory conditions are corrected.

1. Sweep primed surfaces if needed.

2. Adjust frames and covers if needed.

3.03 BASE COURSE

A. Place and compact base course.

B. On arrival at point of use, dump directly into mechanical spreader.

C. Immediately spread and strike off true to the line, grade and cross section indicated, to such loose depth that when work is completed, the indicated thickness or weight per square yard will be secured.

D. Correct irregularities while the mixture is still hot.

E. At locations not readily accessible to mechanical spreaders, acceptable hand spreading methods may be used.

F. Finished surfaces placed adjacent to curbs, gutters, manholes, etc., shall be approximately 1/4-inch above the edges of these structures.

G. Section 32 11 23 - Aggregate Base Course.

3.04 COMPACTION

A. Perform initial rolling with 3-wheel steel roller or a steel wheel 2-axle tandem roller.

B. Follow initial rolling with at least four complete coverages by a pneumatic tired roller.

C. Complete rolling with steel wheel 2-axle tandem roller.

D. Rolling shall start longitudinally at the sides and proceed gradually toward the center of the pavement, overlapping on successive trips approximately 1/2 the width of the roller.

E. Use hand or mechanical tampers in areas not accessible to powered rollers.

F. Surface mixture after compaction shall be smooth and true to the established crown and grade.

3.05 PREPARATION – PRIMER

A. Apply primer in accordance with manufacturer's instructions.

B. Apply primer on aggregate base or sub-base at uniform rate of 1/3 gal/sq yd.

C. Use clean sand to blot excess primer.

3.06 PREPARATION - TACK COAT

A. Apply tack coat in accordance with manufacturer's instructions.

B. Apply tack coat on asphalt or concrete surfaces over subgrade surface at uniform rate of 1/3 gal/sq yd.

C. Apply tack coat to contact surfaces as required.

D. Coat surfaces of manhole frames with oil to prevent bond with asphalt pavement. Do not tack coat these surfaces.

3.07 SEAL COAT

A. Apply seal coat to surface course and asphalt curbs in accordance with AI MS-19.

3.08 TOLERANCES

A. Flatness: Maximum variation of 1/4 inch measured with 10 foot straight edge.

B. Compacted Thickness: Within 1/4 inch of specified or indicated thickness.

C. Variation from True Elevation: Within 1/8 inch, in 6-feet.

D. Free from Bird Baths.

3.09 FIELD QUALITY CONTROL

A. See Section 01 40 00 - Quality Requirements, for general requirements for quality control.

B. Provide field inspection and testing. Take samples and perform tests in accordance with AI MS-2.

C. Flood Test

1. Flood the entire asphaltic concrete paved area with water by use of a tank truck or hoses.

2. If a depression is found where water ponds to a depth of more than 1/8-inch in 6-feet, fill or otherwise correct to provide proper drainage.

3. Feather and smooth the edges of fill so that the joint between fill and original surface is invisible.

3.10 PROTECTION

A. Allow no traffic on surface until the mixture has hardened sufficiently to prevent distortion.

END OF SECTION

SECTION 32 16 00

CURBS AND GUTTERS

PART 1 GENERAL

1.01 DESCRIPTION

A. Work included: Provide cast-in-place concrete, including formwork, where shown on the Drawings, as specified herein, and as needed for a complete and proper installation.

B. Related work:

1. Documents affecting work of this Section include, but are not necessarily limited to, General Conditions, Supplementary Conditions, and Sections in Division 1 of these Specifications.

2. Section 03 30 00 - Cast-in-Place Concrete.

1.02 QUALITY ASSURANCE

A. Use adequate numbers of skilled workmen who are thoroughly trained and experienced in the necessary crafts and who are completely familiar with the specified requirements and the methods needed for proper performance of the work of this Section.

B. Reference standards: Comply with the following codes, specifications and standards, except as otherwise shown or specified:

1. American Concrete Institute (ACI) Publications:

a. ACI 305Recommended Practice for Hot Weather Concreting

b. ACI 306Recommended Practice for Cold Weather Concreting

c. American Society for Testing and Materials (ASTM) Publications:

i. A 185 Welded Steel Wire Fabric for Concrete Reinforcement

ii. C 31 Making and Curing Concrete Test Specimens in the Field

iii. C 33 Concrete Aggregates

iv. C 39-72 Compressive Strength of Cylindrical Concrete Specimens

v. C 94 Ready-Mixed Concrete

vi. C 150 Portland Cement

vii. C 260 Air-Entraining Admixtures for Concrete

C. Testing agency: A testing laboratory will be retained by the Owner to perform material evaluation tests required by these specifications.

D. Qualifications of contractors performing concrete work: Minimum of two (2) years' experience on comparable concrete projects.

E. Plant qualification: Plant equipment and facilities shall meet all requirements of the Check List for Certification of Ready Mixed Concrete Production Facilities of the National Ready Mixed Concrete Association and ASTM C 94.

1.03 SUBMITTALS

A. Comply with the pertinent provisions of Section 01 30 00 – Administrative Requirements.

B. Within fifteen (15) calendar days after receiving the Owner's Notice to Proceed, submit proposed mix designs for approval.

1. Proportions shall be determined by means of laboratory tests of concrete made with the cement and aggregate proposed for use.

2. Provide report in detail from an approved testing laboratory showing 7-day and 28-day strengths obtained using materials proposed.

3. Required average strength above specified strength:

a. Determinations of required average strength above specified strength (f'c) shall be in accordance with ACI 318 and ACI 301.

b. Cost of this work shall be borne by the Contractor.

C. Manufacturer's data: Submit manufacturer's specification with application instructions for proprietary materials and items, including curing compound, form release agents, admixtures, patching compounds, and others as required by the Engineer.

1.04 PRODUCT HANDLING

A. Comply with pertinent provisions of Section 01 60 00 – Product Requirements.

PART 2 PRODUCTS

2.01 FORMS

A. Use form materials conforming to ACI 347.

B. Form coatings: Form release coating shall be neat oil with surface wetting agent or chemical release agent which effectively prevents absorption of moisture, prevents bonding with concrete, is non-staining to concrete and leaves the concrete with a paintable surface.

1. On surfaces to receive an applied coating, use a residual free chemical form release agent that is compatible with the applied coating and will not prevent the applied finish from satisfactorily bonding to the concrete.

2.02 SIDEWALK REINFORCEMENT

A. Fiber reinforcing:

1. Use fiber reinforcing where indicated on the drawings.

2. Provide polypropylene or co-polymer fibers as manufactured by High Tech Fibers, Inc., Fibermesh Company or an approved equal.

3. Where required, use fiber reinforcing at a rate of 2.0 lbs. per cubic yard unless another rate is indicated on the drawings.

B. Provide welded wire mesh for sidewalk reinforcement in compliance with ASTM A 185.

2.03 PREMOLDED JOINT FILLERS

A. In concrete pavements (exterior) and concrete sidewalks, use asphalt impregnated cellulose fiber joint fillers complying with ASTM D 1751.

2.04 CONCRETE MATERIALS

A. Cement: Use Portland cement: ASTM C 150, Type I, Type I-P or Type II, low alkali.

B. Aggregates:

1. Fine aggregate: Conform to ASTM C 33.

2. Coarse aggregate: Conform to ASTM C 33, Size #57.

C. Water: Clean and potable and free from injurious amounts of deleterious materials.

D. Admixtures:

1. Air entraining admixture: ASTM C 260.

2. Water reducing, set controlling admixture: Conform to ASTM C 494.

a. Type A - water reducing.

b. Type D - water reducing and retarding.

c. Do not use admixtures containing calcium chloride.

E. Curing compounds:

1. On all vertical and formed surfaces and construction joints, use a non-residual, non-staining curing compound conforming to ASTM C 309 Type 1 and 1D. Acceptable products are:

a. L&M Cure by L&M Construction Chemicals, Inc.

b. Horn WB-75 by A.C. Horn Company.

c. Sonosil by Sonneborn, Inc.

d. Approved equal.

2.05 CONCRETE MIXES

A. Provide concrete with the compressive strength of 3000 psi for a 28-day strength as minimum.

B. Entrained air: 3000 psi concrete, 5-percent ±1-percent.

C. Slump: 3000 psi concrete, 4-inches ±1-inch.

D. Production of concrete:

1. General: Concrete shall be ready mixed and shall be batched, mixed and transported in accordance with ASTM C 94 except as otherwise indicated.

2. Monitor time and mix proportions by plant delivery slips.

3. Air-entraining admixtures: Add air-entraining admixture into the mixture as a solution and measure by means of an approved mechanical dispensing device.

4. Water reducing and retarding admixture: Add water reducing and retarding admixture and measure as recommended by the manufacturer.

5. Addition of water to the mix upon arrival at the job site shall not exceed that necessary to compensate for a 1-inch loss in slump, nor shall the design maximum water-cement ratio be exceeded. Water shall not be added to the batch at any later time.

6. Weather conditions: Control temperature of mix as required by ACI 306 “Cold Weather Concreting" and by ACI 305 "Hot Weather Concreting".

PART 3 EXECUTION

3.01 SURFACE CONDITIONS

A. Examine the areas and conditions under which work of this Section will be performed. Correct conditions detrimental to timely and proper completion of the Work. Do not proceed until unsatisfactory conditions are corrected.

B. Water, mud, organic, and other detrimental material shall be removed from excavations before concrete is deposited.

C. Notify the Engineer prior to placing concrete and place no concrete until the formwork, reinforcing and embedded items have been inspected by the Engineer.

3.02 FORMWORK

A. General:

1. Construct forms in conformance with ACI 347.

2. Provide formwork sufficiently tight to prevent leakage of cement paste during concrete placement.

3. Coat form contact surfaces with approved form coating compound prior to placing reinforcing steel.

B. Formwork reuse: Reuse only forms that are in good condition and which maintain a uniform surface texture on exposed concrete surfaces.

1. Apply a light sanding as necessary to obtain a uniform texture.

C. Removal of forms:

1. Do not disturb or remove forms until the concrete has hardened sufficiently to permit form removal with complete safety.

2. Exercise care in removing forms from finished concrete surfaces so that surfaces are not marred or gouged and that corners are true, sharp and unbroken.

3. Whenever the formwork is removed during the curing period, continue to cure the exposed concrete by one of the methods specified herein.

3.03 PLACING CONCRETE

A. Preparation:

1. Remove foreign matter accumulated in the forms.

2. Rigidly close openings left in the formwork.

3. Wet wood forms sufficiently to tighten up cracks. Wet other material sufficiently to maintain workability of the concrete.

4. Use only clean tools.

5. Provide and maintain sufficient tools and equipment on hand to facilitate uninterrupted placement of the concrete.

6. Before commencing concrete, inspect and complete installation of formwork and wire mesh.

B. Conveying:

1. Transport and handle concrete from the truck to the place of final deposit as rapidly as practicable by methods which will prevent segregation or loss of ingredients to maintain the quality of the concrete.

2. Provide equipment for lifting, dumping, chuting, pumping or conveying the concrete, of such size and design as to ensure a practically continuous flow of concrete at the delivery and without separation of materials.

3. Do not use concrete that is not placed within 1-1/2 hours after water is first introduced into the mix unless the slump is such that it meets the specified limits without the addition of water to the batch.

C. Placing:

1. Deposit concrete as nearly as practicable in its final location so as to avoid separation due to rehandling and flowing.

2. Place concrete at such a manner that concrete upon which fresh concrete is deposited is still plastic.

D. Hot weather placement: Place concrete in hot weather in accordance with ACI 305 "Hot Weather Concreting" and as specified herein.

1. Do not place concrete whose temperature exceeds 100ºF.

2. Thoroughly wet forms and reinforcing prior to placement of concrete.

3. Use additional set retarder as necessary to increase set time.

4. Start curing as soon as the concrete is sufficiently hard to permit without damage.

E. Cold weather placement: Place concrete in cold weather in accordance with ACI 306 and as specified herein.

1. Do not place concrete when the atmospheric temperature is below 40ºF.

2. Do not add salts, chemicals, or other materials to the concrete mix to lower the freezing point of the concrete.

F. Consolidation:

1. Consolidate each layer of concrete immediately after placing, by use of internal concrete vibrators supplemented by hand spading, rodding, or tamping.

a. Use vibrators having a 2-inch head diameter and a minimum frequency of 8000 vibrations per second.

b. Provide sufficient number of vibrators to properly consolidate the concrete, keeping up with placement operations.

c. Provide at least one spare vibrator on site.

d. Insert and withdraw vibrators at points approximately 18-inches apart.

e. Do not vibrate forms.

f. Do not use vibrators to transport concrete inside the forms.

3.04 PROTECTION

A. Protect the surface finish of newly placed concrete from damage by rainwater or construction traffic.

B. Do not apply design loads to structures until the concrete has obtained the specified strength.

3.05 CURING

A. Beginning immediately after placement, protect concrete from premature drying, excessively hot and cold temperatures and mechanical injury.

B. Curing compound: Apply curing compound immediately after completion of the finish on uniformed surfaces and within two hours after removal of forms on formed surfaces.

1. Spray the entire surface with two coats of liquid curing compound, applying the second coat in the direction of 90-degrees to the first coat.

2. Apply compound in accordance with the manufacturer's instructions to cover the surface with a uniform film that will seal thoroughly.

3.06 CONCRETE FINISHING

A. Finish schedule: Unless otherwise indicated on the drawings, finish all concrete surfaces in accordance with the following schedule:

1. Form finish: Formed surfaces not ordinarily exposed to view, including the underside of slabs not exposed to view.

2. Broom finish: Exterior, outdoor slabs exposed to view including:

a. Outdoor floor slabs and walkways.

b. Other floors which may become wet or otherwise require a non-skid surface.

c. Sidewalks and concrete pavements.

d. Edge finish: Exposed edges of slabs not receiving chamfer including:

i. Sidewalk edges and joints.

ii. Pavement edges and joints.

iii. Other slab edges not chamfered.

B. Finishing procedures:

1. Form finish:

a. Repair defective concrete.

b. Fill depressions deeper than 1/4-inches.

c. Fill tie holes.

d. Remove fins exceeding 1/8-inches in height.

e. Broom finish:

i. Float finish as specified herein.

ii. Provide a scored texture by drawing a broom across the surface.

f. Edge finish: Tool slab edges and joints with a 1/4-inch radius edging tool.

3.07 SURFACE REPAIR

A. Patching mortar:

1. Make a patching mortar consisting of 1 part Portland cement to 2-1/2 parts sand by damp loose volume.

2. Mix the mortar using one part acrylic bonding admixture to two parts water.

3. Surface defects:

a. Remove all defective concrete down to sound solid concrete.

b. Chip edges perpendicular to the concrete surface or slightly undercut, allowing no featheredges.

c. Dampen surfaces to be patched.

d. Patch defects by filling solidly with repair mortar.

4. Allow the Engineer to inspect the work before placing the patching mortar.

5. Repair defective areas greater than 1 sq. ft. or deeper than 1-1/2 inches as directed by the Engineer using materials approved by the Engineer at no additional expense to the Owner.

3.08 JOINTS

A. Construction joints:

1. Unless otherwise approved by the Engineer, provide construction joints every ten (10) feet, or as shown on the drawings.

2. Continue all reinforcing across construction joints and provide 1-1/2-inches deep keyways unless indicated otherwise on the drawings.

B. Expansion joints:

1. Provide 1/2-inch expansion joints with premolded joint filters every thirty (30) feet.

3.09 FIELD QUALITY CONTROL

A. Concrete cylinder tests: Test as specified in Section 01 45 29, Testing Laboratory Services.

1. During construction, prepare test cylinders for compressive strength testing, using 6-inches diameter by 12-inches long single use molds, complying with ASTM C 31.

a. Make a set of three test cylinders from each pour.

b. Identify each and tag cylinder as to date of pour and location of concrete which it represents.

c. Deliver cylinders to testing lab approved by the Owner.

d. Cost for preparation and delivery of cylinders shall be borne by the Contractor. Cost for testing cylinders will be borne by the Contractor.

e. Should strengths shown by test cylinders fail to meet specified strengths for the concrete represented, then:

i. Engineer shall have the right to require changes in the mix proportions as he deems necessary on the remainder of the work.

ii. Additional curing of those portions of the structure represented by the failed test cylinders shall be accomplished as directed by the Engineer.

iii. Upon failure of the additional curing to bring the concrete up to specified strength requirements, strengthening or replacement of those portions of the structure shall be as directed by the Engineer.

iv. The Engineer may require additional testing of concrete in question by either non-destructive methods such as the Swiss Hammer, Windsor Probe, Ultrasonics or by coring and testing the concrete in question in accordance with ASTM C 42. Such testing shall be performed at no additional cost to the Owner.

B. Other field concrete tests:

1. Slump tests: Either the Engineer or a testing laboratory representative will make slump tests of concrete as it is discharged from the mixer.

a. Slump test may be made on any concrete batch at the discretion of the Engineer.

b. Failure to meet specified slump requirements will be cause for rejection of the concrete.

c. Temperature: The concrete temperature may be checked at the discretion of the Engineer.

d. Entrained air: Air content of the concrete will be checked by a representative of the testing laboratory at the discretion of the Engineer.

C. Coordination of laboratory services: The Contractor shall be responsible for coordination of laboratory services.

1. Maintain a log recording quantities of each type of concrete placed, date and location of pour.

2. Inform the testing laboratory of locations and dates of concrete placement and other information as required to be identified in the laboratory's test reports.

D. Tests required because of extensive honeycombing, poor consolidation of the concrete or any suspected deficiency in the concrete will be paid for by the Contractor.

E. Dimensional tolerances for allowable variations from dimensions or locations of concrete work, including the locations of embedded items shall be as given in ACI 301.

F. Concrete which fails to meet strength requirements, dimensional tolerances, watertightness criteria, or is otherwise deficient due to insufficient curing, improper consolidation or physical damage shall be replaced or repaired as instructed by the Engineer at no expense to the Owner.

3.10 MEASUREMENT AND PAYMENT

A. No separate measurement or direct payment will be made for the items under this Section and all costs for same shall be included in the lump sum bid price for the project.

END OF SECTION

SECTION 32 17 23

PAVEMENT MARKINGS

PART 1 GENERAL

1.01 SECTION INCLUDES

A. Parking lot markings, including parking bays, crosswalks, arrows, handicapped symbols and curb markings.

B. Roadway lane markings and crosswalk markings.

C. "No Parking" curb painting.

1.02 RELATED REQUIREMENTS

A. Section 32 13 13 - Bituminous Concrete Paving.

1.03 PRICE AND PAYMENT PROCEDURES

A. See Section 00 62 73 – Schedule of Values, for additional unit price requirements.

1.04 REFERENCE STANDARDS

A. SCDOT Thermoplastic Pavement Markings

B. FS TT-B-1325 - Beads (Glass Spheres); Retro-Reflective; Rev. D, 2007.

C. MPI (APL) - Master Painters Institute Approved Products List; Master Painters and Decorators Association; current edition, www.paintinfo.com.

D. FHWA MUTCD - Manual on Uniform Traffic Control Devices for Streets and Highways; U.S. Department of Transportation, Federal Highway Administration; http://mutcd.fhwa.dot.gov; current edition.

1.05 SUBMITTALS

A. See Section 01 30 00 - Administrative Requirements, for submittal procedures.

B. Product Data: Manufacturer's data sheets on each product to be used, including:

1. Preparation instructions and recommendations.

2. Storage and handling requirements and recommendations.

3. Installation methods.

C. Certificates: Submit for each batch of paint and glass beads stating compliance with specified requirements.

D. Maintenance Materials: Furnish the following for Owner's use in maintenance of project.

1. See Section 01 60 00 - Product Requirements, for additional provisions.

2. Extra Paint: 2 containers, 1 gallon size, of each type and color.

1.06 DELIVERY, STORAGE AND HANDLING

A. Deliver paint in containers of at least 5 gallons accompanied by batch certificate.

B. Deliver glass beads in containers suitable for handling and strong enough to prevent loss during shipment accompanied by batch certificate.

C. Store products in manufacturer's unopened packaging until ready for installation.

D. Store and dispose of solvent-based materials and materials used with solvent-based materials, in accordance with requirements of local authorities having jurisdiction.

1.07 FIELD CONDITIONS

A. Do not install products under environmental conditions outside manufacturer's absolute limits.

PART 2 PRODUCTS

2.01 MATERIALS

The thermoplastic pavement marking material shall be a reflectorized mixture of thermoplastic binder and spherical glass beads upon which additional glass beads are applied by dropping immediately following application. If recommended by the thermoplastic manufacturer, the pavement surface shall be coated with a primer-sealer material before application of the thermoplastic binder material.

A. Thermoplastic Compound. The thermoplastic binder compound shall meet all requirements of AASHTO M 249 with the following adjustments:

1. The material may be shipped in the granulated form or the block form.

2. For longitudinal long line and channelization makings, including gore markings on interstate routes, the material may be either hydrocarbon or Alkyd-based.

3. All handwork consisting of stop-bars, crosswalks, legends and symbols shall be Alkyd- based material only.

B. Glass Beads. The drop-on glass beads shall meet the requirements of AASHTO M 247, Type 1.

C. Primer-Sealer. A primer-sealer as recommended by the manufacturer of the thermoplastic pavement marking material shall be used on all Portland cement pavement surfaces and all bridge surfaces that have not been overlaid with asphalt. The primer-sealer also shall be used on any type of pavement before the placing of any pavement symbols. Primer-sealer shall be used on asphaltic concrete pavement surfaces if recommended by the manufacturer of the thermoplastic pavement marking material. The primer-sealer shall form a continuous film that will mechanically adhere to the pavement and shall neither discolor nor cause any noticeable change in the pavement outside of the finished pavement markings. The primer-sealer shall be applied in accordance with the manufacturer's recommendations.

D. Certification. The Contractor shall obtain from the manufacturer of the thermoplastic binder test results of all requirements of AASHTO M 249 for each batch of material

furnished along with a final certification that the material furnished meets the requirements of the Department's specifications. The Contractor shall also obtain from the manufacturer of the drop-on glass beads a certification stating that the material furnished meets all the requirements of the contract specifications. Copies of the above-described affidavits shall be furnished to the Engineer.

Part 3 EXECUTION

3.01 EQUIPMENT

The application properties of AASHTO M 249 are expanded as follows:

A. Material shall be prepared only by means of an insulated batching machine recommended or furnished by the manufacturer of the compound and shall consist of a special kettle for melting and heating the composition. Applicators may be either a truck-mounted liner or a portable unit. “Truck-mounted” shall be defined as a self-propelled vehicle with six or more wheels and an enclosed cab for housing a driver.

B. If the contract requires extruded application, the material shall be applied to the pavement by an extrusion method herein one side of the shaping die is the pavement surface and the other three sides are contained by, or are part of, suitable equipment for heating and controlling the flow of the material.

C. The batching machine shall be constructed to provide continuous mixing and agitation of the material. All parts of the equipment which come in contract with the material shall be easily accessed and exposed for cleaning and maintenance and designed to prevent accumulation and clogging.

D. The equipment shall be constructed to ensure that all mixing and conveying parts up the final dispensing nozzle/shaping die maintain the material at the appropriate temperature.

E. The controls shall be such that the operator can override set automatic cycles in order to extend a line or to begin a new cycle at any selected point.

F. The applicators shall provide a means for cleanly cutting off square ends. The truck mounted liner shall provide a method of automatically applying “skip” or solid longitudinal lines, including right and left edge lines, or any combination of single or double line configurations (color and pattern) as illustrated in the latest edition of the *SCMUTCD*. The marking machine shall travel only in the direction of normal traffic flow during marking operations. The use of pans, aprons, or similar appliances with the nozzle/die overruns will not be permitted.

G. Glass beads applied to the surface of the completed marking shall be applied by an automatic bead dispenser attached to the applicator in such a manner that the beads are dispensed almost instantly following application of the marking material.

H. The applicators shall be constructed to produce varying width of traffic markings as indicated in the in the latest edition of the *SCMUTCD* and/or in the plans.

I. Kettles and melters must be such that heating is done by controlled heat transfer systems that are oil jacketed or indirect flame air jacketed. Direct flame equipment will not be allowed. All kettles and melters must be equipped with an automatic thermostatic control device and proper thermometers to control the temperature of the material at the manufacturer’s recommended application temperature range.

J. The applicator and kettle must be equipped and arranged as to satisfy the requirements of the National Fire Underwriters and all state and local requirements.

K. The applicators shall be mobile and maneuverable to the extent that straight lines can be followed and normal curves can be made in a true arc.

3.02 PREPARATION

A. Allow new pavement surfaces to cure for a period of not less than 14 days before application of marking materials.

B. Prepare surfaces using the methods recommended by the manufacturer for achieving the best result for the substrate under the project conditions.

C. Obliteration of existing markings using paint is acceptable in lieu of removal; apply the black paint in as many coats as necessary to completely obliterate the existing markings.

D. Clean surfaces thoroughly prior to installation.

1. Remove dust, dirt and other granular surface deposits by sweeping, blowing with compressed air, rinsing with water, or a combination of these methods.

2. Completely remove rubber deposits, existing paint markings and other coatings adhering to the pavement, by scraping, wire brushing, sandblasting, mechanical abrasion, or approved chemicals.

3. Sandblasting: Use equipment of size and capacity necessary, providing not less than 150 cfm of air at pressure not less than 90 psi at each nozzle used.

E. Where oil or grease are present, scrub affected areas with several applications of tri-sodium phosphate solution or other approved detergent or degreaser and rinse thoroughly after each application; after cleaning, seal oil-soaked areas with cut shellac to prevent bleeding through the new paint.

F. Establish survey control points to determine locations and dimensions of markings; provide templates to control paint application by type and color at necessary intervals.

G. Temporary Pavement Markings: When required or directed by Engineer, apply temporary markings of the color(s), width(s) and length(s) as indicated or directed.

1. After temporary marking has served its purpose, remove temporary marking by carefully controlled sandblasting, approved grinding equipment, or other approved method so that surface to which the marking was applied will not be damaged.

2. At Contractor's option, temporary marking tape may be used in lieu of temporary painted marking; remove unsatisfactory tape and replace with painted markings at no additional cost to Owner.

3.03 APPLICATION

A. Preparation of Surface. The pavement shall be dry and free of glaze, oil, dirt, grease, or other foreign contaminants. Where directed by the Engineer, the Contractor shall remove any existing markings that conflict with the Pavement Marking Plans by an approved method before the application of thermoplastic material.

On Portland cement concrete surfaces including bridge decks, the Contractor shall be

required to remove at least 80% of any existing markings by an approved method to provide for adequate bonding of the thermoplastic material. The width of the removal should be 2 inches wider than the line to be applied. A primer sealer recommended by the thermoplastic manufacturer shall be applied to the prepared surface before the application of the thermoplastic material.

When it is necessary to remove old makings from the pavement surface, it shall be the Contractor's responsibility to capture the removed material utilizing a vacuum or other approved system to prevent its dispersal and to properly dispose of this material. The Contractor shall also be responsible for clean-up, removal and proper disposal of excess or waste thermoplastic materials from the project site.

B. Application of the Primer-Sealer. Where used, the primer-sealer shall be sprayed on the pavement surface where the lines are to be applied. The application thickness and curing time on the pavement before thermoplastic application shall be governed by the recommendations of the manufacturer of the primer sealer.

C. Application of the Pavement Marking Material. All longitudinal markings shall be placed with a truck-mounted applicator except when approved by the Engineer. Such a case may occur where the length of a particular marking is too short, or the curvature too great, to permit efficient use of the liner. Transverse markings may be applied with a portable unit.

The markings shall be straight or of uniform curvature and shall conform uniformly with tangents, curves and transitions. Symbols shall be of dimensions shown in the *SCMUTCD*. Markings must be of the dimensions and placed as shown on the Pavement Marking Plans or as directed by the Engineer. The Contractor shall provide, at his own expense, sufficient control points to serve as guides for the application of markings.

The finished line pavement markings shall be free from waviness and the lateral deviations shall not exceed two inches in fifteen feet. Any greater deviation shall be sufficient cause for requiring the Contractor to remove and correct such markings at his own expense. The Contractor shall also be required to remove and correct, at his expense, any symbol pavement markings not meeting the dimensional requirements shown in the *SCMUTCD.*

The Contractor shall protect the pavement markings until dry by placing guarding or warning devices as necessary. In the event, any vehicle should cross the wet marking, such a pavement marking shall be re-applied and any tracking lines made by the moving vehicle shall be removed by the Contractor at no additional expense to the Department.

To avoid poor quality, pavement markings shall be placed only when the surface of the pavement is surface dry as determined by visual inspection and the pavement temperature is minimum 55° F and the air temperature is minimum 50° F. No work will be allowed when any moisture is visible on the pavement surface. The Contractor shall provide each work crew with a hand-held infrared non-contact thermometer with a temperature range of 0° F to 1000° F (Baxter Scientific Products Model No. T 2940-2 or equivalent) to verify the minimum surface temperature and a pocket thermometer capable of accurately measuring air temperature (ERTCO 532PS or equivalent). Air temperature shall be measured away from heat generating equipment.

No thermoplastic pavement markings shall be applied between December 15 and March 15, inclusive. Additionally, the Engineer may disallow application on any days when the weather is cold and/or rainy and there is some question as to whether the surface temperature will be above 55° F for a period of time adequate to obtain quality pavement markings. The Engineer may also disallow application on any day when, in the Engineer's opinion, moisture conditions are not satisfactory for obtaining quality pavement markings.

New asphalt concrete surfaces shall be in place a minimum of twenty (20) days before marking application. On new Portland cement concrete surfaces, the curing compound shall be removed before application.

An adequate number of personnel experienced in the handling and application of this type of material shall be provided by the Contractor to assure the work is done properly.

Work shall be done only during daylight hours unless specified otherwise and all markings shall be sufficiently dry, before sunset, to permit crossing by traffic. All protective devices shall be removed before sunset to allow free movement of traffic at night.

The pavement marking material shall be applied at a temperature that will provide best adhesion to the pavement and shall be between 390° F and 420° F as recommended by the manufacturer. The material shall be heated uniformly throughout and shall have a uniform disbursement of binder, pigment and glass beads when applied to the surface of the pavement.

All extruded lines 12 inches or less in width, shall be applied with a die that equals the width of the line. All extruded lines greater than 12 inches may be applied with two dies whose combined widths equal the width of the line.

D. Rates of Application.

1. Thermoplastic Material. The thermoplastic material shall be applied at the specified widths and at a rate to result in a new material thickness as specified below:

   90 mils for Edge Lines and Median Lines including:

   4 inch solid white lines,
   4 inch solid yellow lines,
   4 inch broken yellow lines,
   6 inch solid white lines and
   6 inch solid yellow lines.
   90 mils for Lane Lines including:
   4 inch broken white lines and
   6 inch broken white lines.

   90 mils for Center Lines on Two Lane Roads including:

   4 inch broken yellow lines and
   4 inch solid yellow lines.

   125 mils for all other lines not listed above.

2. Glass Beads. Drop-on glass beads shall be mechanically applied to the surface of the pavement marking material immediately after the material is applied to the pavement surface and while the pavement marking material is still molten to ensure that the beads will be held by and mechanically embedded in the surface of the material. The beads shall be uniformly distributed over the entire surface of the marking and shall be applied at a minimum rate of 12 pounds per 100 square feet of stripe.

E. Warranty. The Contractor shall transfer to the Department the warranty on thermoplastic materials issued by the manufacturer. The Contractor shall also furnish the Department the normal warranty for material for a stated period beginning with the last date of marking application on the project. Work will not be allowed to commence until the warranties have been received by the Department.

F. Departmental Sampling. In addition to the initial acceptance of the thermoplastic material, a representative of the Department will sample each batch or lot scheduled for shipment for SCDOT projects for testing. Additional sampling and testing at the job site may occur at the discretion of the Department. A certification from the manufacturer must be submitted for each shipment for each project, certifying that the thermoplastic meets the requirements of AASHTO 249 as amended herein for each type of thermoplastic material. No thermoplastic material shall be used nor will payment be made for thermoplastic until the thermoplastic certification is received and accepted by the Engineer. The Department reserves the right to sample and test any thermoplastic material supplied for any SCDOT use at any time.

G. Inspection and Acceptance of Work. All thermo-plastic pavement markings shall be inspected for proper line thickness and width, proper adhesion and proper cycle length. The markings shall also be observed both day and night to determine whether all requirements of the Contract have been met. Any markings failing to have satisfactory appearance, either day or night shall be reapplied by the Contractor at his expense.

The final acceptance of the thermoplastic pavement markings will be delayed for a period of 180 days after the last date of marking on the project to permit observation of performance. The Contractor shall be required to replace any markings or markers that, in the opinion of the Engineer, have not performed satisfactorily during this 180-day period due to defective materials and/or workmanship.

3.04 EPOXY PAVEMENT MARKINGS

A. Description. This item of work consists of the furnishing and application of permanent epoxy pavement markings within the limits of the project to delineate the travel lanes and channelize traffic.

This work shall include protection of pavement markings during construction, protection of traffic during installation of pavement markings, determination of no passing zones for two-lane facilities in accordance with the *South Carolina Manual on Uniform Traffic Control Devices (SCMUTCD)* and providing the Department data used in establishing no passing zones on two-lane facilities.

B. MATERIAL

Epoxy Pavement Marking Material. Epoxy pavement markings are permanent retroreflective (white or yellow) and non-retro-reflective (black) pavement marking materials of the color and pattern indicated on the plans or special provisions. The Contractor shall supply all the necessary equipment and materials for proper surface preparation and correct application of the pavement marking material.

END OF SECTION

SECTION 32 92 00

TURF AND GRASSES

PART 1 GENERAL

1.01 SECTION INCLUDES

A. Seeding and Fertilization

B. Provide grassing for the area specified herein, or as indicated, for a complete and proper installation.

C. Water and sanitary sewer easements, including highway and street shoulders: All areas disturbed by the construction process.

1.02 RELATED REQUIREMENTS

A. Documents affecting work in this section include, but are not necessarily limited to, General Conditions, and Sections in Division 1 of these Specifications.

B. Section 31 23 23.13 – Backfill and Compaction

C. Section 31 25 00 – Erosion and Sedimentation Control

1.03 DEFINITIONS

A. Weeds: Include Dandelion, Jimsonweed, Quackgrass, Horsetail, Morning Glory, Rush Grass, Mustard, Lambsquarter, Chickweed, Cress, Crabgrass, Canadian Thistle, Nutgrass, Poison Oak, Blackberry, Tansy Ragwort, Johnsongrass, Poison Ivy, Nut Sedge, Nimble Will, Blindweed, Bentgrass, Wild Garlic, Perennial Sorrel, and Brome Grass.

1.04 QUALITY ASSURANCE

A. Use adequate numbers of skilled workmen who are thoroughly trained and experienced in the necessary crafts and who are completely familiar with the specified requirements and the methods needed for proper performance of the work of this Section.

B. Seed: Conform to all State laws and to all requirements and regulations of the South Carolina Department of Agriculture.

1. Deliver to site each variety of seed individually packaged and tagged to show name, net weight, origin, and lot number.

C. Fertilizer: Conform to State fertilizer law.

1.05 SUBMITTALS

A. See Section 01 30 00 – Administrative Requirements, for submittal procedures.

B. Comply with pertinent provisions of Section 01 30 00 – Administrative Requirements.

C. Product Data: Within 15 calendar days after the Contractor has received the Owner's Notice to Proceed, submit:

1. Complete materials list of items proposed to be provided under this Section.

2. Material Safety Data Sheets for all materials to be used.

3. Installation/Application Instructions for all relevant materials (i.e. erosion blankets, hydraulic mulches)

1.06 DELIVERY, STORAGE AND HANDLING

A. Deliver grass seed mixture in sealed containers. Seed in damaged packaging is not acceptable. Deliver seed mixture in containers showing percentage of seed mix, year of production, net weight, date of packaging, and location of packaging.

B. Deliver fertilizer in waterproof bags showing weight, chemical analysis, and name of manufacturer.

C. Comply with pertinent provisions of Section 01 60 00 – Produce Requirements

D. At time of delivery, furnish the Engineer invoices of all materials received in order that application rates may be determined.

E. Immediately remove from the site materials that do not comply with the specified requirements, and promptly replace with materials meeting the specified requirements.

PART 2 PRODUCTS

2.01 GRASS SEED

A. Provide grass seed that is:

1. Free from noxious weed seeds

2. Current year crop seed

3. Treated with appropriate fungicide at time of mixing

4. Delivered to the site in sealed containers with dealer's guaranteed analysis

B. Water: Clean, fresh and fee of substances that could inhibit vigorous growth of grass.

C. Stakes: Softwood lumber, chisel pointed

D. String: inorganic fiber

E. Lime and pH Adjustment

1. For Dry Seeding operations provide agricultural grade, standard ground limestone conforming to the current "Rules, Regulations and Standards of the Fertilizer Board of Control" issued at Clemson University.

2. For Hydraulic Seeding operations, provide NeutraLime Dry by Profile Products or approved equal to raise pH or Aqua-pHix by Profile Products or approved equal to lower pH at rate determined by soil analysis or at manufacturer's recommended rate.

3. Bag tags or delivery slip for bulk loads shall indicate brand or trade name, calcium carbonate equivalent, and other pertinent data to identify the lime.

F. Wood Fiber Mulch

1. Provide 100% thermally processed wood fiber or blended 70/30 wood/cellulose fiber manufactured specifically for discharging uniformly on the ground surface when dispersed by a hydro-seeding machine.

2. Material shall contain thermally processed wood fibers so as to contain no germination or growth inhibiting factors and to achieve phyto-sanitization.

3. Material shall contain basic green dye to facilitate visual metering.

G. Flexterra HP-FGM or approved equal

1. Provide Flexterra HP-FGM as manufactured by Profile Products or approved equal.

2. Material shall contain thermally refined wood fibers and crimped synthetic fibers so as to contain no germination or growth inhibiting factors.

3. Materials shall contain non-toxic green dye to facilitate metering.

4. Material shall be 100% Bio-degradable.

H. Straw Mulch/Dry Applied Mulching Pellets

1. Provide straw or hay material.

a. Straw to be stalks of wheat, rye, barley or oats.

b. Hay to be timothy, peavine, alfalfa, or coastal Bermuda

2. Material to be reasonably dry and reasonably free from mature seed bearing stalks, roots, or bulblets or Johnson Grass, Nutgrass, Wild Onion or any other Noxious weeds detailed in part 1.04 of this Section.

3. Seed Aide Aero® manufactured by Profile Products or approved equal at a rate of 3,000 LBS/ACRE can be used as a weed free alternative to straw mulch.

I. Erosion Control Blanket

1. Provide on areas as shown on the plans

2. Provide Erosion Control Blanket S-2, from Western Excelsior, or approved equal.

2.02 TESTS

A. Provide analysis of topsoil fill under provisions of Section 01 40 00 – Quality Requirements

B. Analyze to ascertain the percentage of nitrogen, phosphorus, potash, soluble salt content, organic matter, and pH value.

C. Submit minimum 10 oz (280 g) sample of topsoil proposed. Forward sample to approved testing laboratory in sealed containers to prevent contamination.

D. Testing is not required if recent test are available for imported topsoil. Submit these test results to the testing laboratory for approval. Indicate, by test results, information necessary to determine suitability.

E. If pH is not in the range of 6.0 to 7.0, adjust accordingly with Lime.

F. Organic matter must be 2.0% or greater. If organic matter percentage is less than 2%, contractor shall apply JumpStart or approved equal and/or BioPrime by Profile Products or approved equal to modify soil organic matter. JumpStart or approved equal and BioPrime or approved equal to be applied at rate determined by soil analysis or at manufacturer's recommended rate

PART 3 EXECUTION

3.01 EXAMINATION

A. Verify that prepared soil base is ready to receive the work of this Section.

3.02 PREPARATION

A. Seed these areas immediately upon completion of grading or construction and cleanup operations.

1. Slopes greater than 4:1

2. Utility right-of-ways or any other disturbed area adjacent to wetlands.

B. Bring all areas to proper line, grade and cross section indicated on the plans.

C. Repair erosion damage prior to commencing seeding operations.

D. Loosen seed bed to a minimum depth of 3" and track in slope so as the direction of the track marks is perpendicular to the direction of the slope.

E. Ensure a minimum of 2-inches of topsoil exists in areas to be seeded.

F. Remove all roots, clods, stones larger than 1" in any dimension, and other debris.

3.03 FERTILIZATION

A. Apply fertilizer in accordance with manufacturer's instructions and the Soil Analyses as detailed in part 2.03 of this Section.

B. Apply after smooth raking of topsoil and prior to roller compaction.

C. Mix thoroughly into upper 2 inches (50 mm) of topsoil.

D. If seeding using a hydro-seeder apply fertilizer in slurry with mulch, seed, and lime.

E. Spread uniformly over areas to be seeded at:

1. Rate of 11 LBS/1000 sq. ft. when using 19-19-19.

2. Rate of 20 LBS/1000 sq. ft. when using 10-10-10.

3. Use approved mechanical spreaders for dry seeding application.

F. Second Application of Fertilizer

1. When plants are established and showing satisfactory growth, apply Nitrogen at the rate of 1 lb. per 1000 sq. ft.

2. Apply using dry seeding application unless otherwise directed by Engineer.

3. Do not apply to stands of temporary grasses.

3.04 SEEDING

A. Mixtures of different types of seed for the various schedules shall be weighted and mixed in proper proportions in the presence of the Engineer.

B. Permanent Seeding Mix – Slopes 4:1 or Greater

1. Schedule No. 1 – Planting Dates April 1 – September 15:

a. Slopemaster Spring/Summer Mix by Pennington Seed, Inc. or approved equal.
25% Hulled Sahara Bermudagrass
25% Unhulled Sahara Bermudagrass
25% Pensacola Bahiagrass
10% Durana White Clover
10% Brown Top Millet
5% Weeping Lovegrass

b. Rate 75 LBS/ACRE or 1.75 LBS/1000 sq. ft.

c. Seed to be coated with MYCO Advantage by Pennington Seed, Inc. or approved equal.

2. Schedule No. 2 – Planting Dates September 15 – March 31:

a. Slopemaster Fall/Winter Mix by Pennington Seed, Inc. or approved equal.
25% Unhulled Sericea Lespedeza
20% Unhulled Sahara Bermudagrass
20% Greystone Tall Fescue
10% Pensacola Bahiagrass
10% Durana White Clover
10% Rye Grain

5% Weeping Lovegrass

b. Rate 100 LBS/ACRE or 2.25 LBS/1000 sq. ft.

c. Seed to be coated with MYCO Advantage by Pennington Seed, Inc. or approved equal.

C. Permanent Seeding Mix – Slopes 4:1 or Less

1. Schedule No. 1 – Planting Dates April 1 – September 15:

a. Hulled Sahara Bermudagrass

b. Rate 75 LBS/ACRE or 1.75 LBS/1000 sq. ft.

2. Schedule No. 2 – Planting Dates September 15 – March 31:

a. Unhulled Sahara Bermudagrass

b. Rate 100 LBS/ACRE or 2.25 LBS/1000 sq. ft.

D. Temporary Seeding Mix – All Disturbed Areas

1. Schedule No. 1 – Planting Dates April 1 – September 15:

a. Brown Top Millet

Rate 45 LBS/ACRE or 1 LBS/1000 sq. ft.

2. Schedule No. 2 – Planting Dates September 15 – March 31:

a. Rye Grain

Rate 80 LBS/ACRE or 2 LBS/1000 sq. ft.

E. Do not seed areas in excess of that which can be mulched on same day.

F. Do not sow during rain, when the ground is too dry, or during windy periods.

G. Immediately following seeding and compacting, apply mulch to a thickness of 1/8 inches (3 mm). Maintain clear of shrubs and trees.

H. Apply water with a fine spray immediately after each area has been mulched. Saturate to 4 inches (100 mm) of soil.

I. Following germination, immediately re-seed areas without germinated seeds that are larger than 4 by 4 inches (100 mm by 100mm).

3.05 SOWING METHODS

A. General:

1. Perform seeding during the periods and at the rates specified in the seeding schedules.

2. Do not conduct seeding work when ground is frozen or excessively wet.

3. Produce satisfactory stand of grass regardless of period of the year the Work is performed.

B. Seeding, slopes less than four horizontal to one vertical:

1. Seeding of slopes of 4:1 or less will be done in one of the following two ways:

2. Dry Seeding:

a. Sow seed not more than 24 hours after application of fertilizer and lime.

b. Use mechanical seed drills on accessible areas, rotary hand seeders, power sprayers, etc. may be used on steep slopes or areas not accessible to seed drills.

c. Cover seed and lightly compact with culti-packer if seed drill does not.

d. Within 24 hours following compaction of seeded areas, uniformly apply straw mulch, as defined in Section 2.01, at a rate of 4000 LBS/ACRE or 90 LBS/1000 sq. ft.

3. Hydraulic Seeding:

a. Apply seed, fertilizer, lime, and wood fiber mulch using hydraulic equipment.

b. Equipment to have built-in agitation system with capacity to agitate, suspend and homogeneously mix a slurry of the specified amount of fiber, fertilizer, seed, lime, and water.

c. Minimum capacity of slurry tank: 1000 gallons.

d. Apply 100% wood or 70/30 wood/cellulose blend fiber mulch, defined in Section 2.01, at a rate of 2500 LBS/ACRE or 60 LBS/1000 sq. ft.

e. Regulate slurry mixture so that amounts and rates of application will result in uniform application of all materials at not less than the specified amounts.

f. Apply slurry in two directions so as to avoid “shadowing.”

g. Use color of fiber mulch as guide, spraying the prepared seed bed until a uniform visible coat is obtained.

C. Seeding, slopes greater than four horizontal to one vertical:

1. Seeding of slopes of 4:1 or greater will be done in one of the following two ways

2. Dry Seeding:

a. Sow seed not more than 24 hours after application of fertilizer and lime.

b. Use mechanical seed drills on accessible areas, rotary hand seeders, power sprayers, etc. may be used on steep slopes or areas not accessible to seed drills.

c. Cover seed and lightly compact with culti-packer if seed drill does not.

d. Within 24 hours following compaction of seeded areas, uniformly lay double netted excelsior blanket, as defined in Section 2.01, over seeded areas. Excelsior blanket installation and staple pattern shall conform strictly to manufacturer's instructions.

3. Hydraulic Seeding:

a. Apply seed, fertilizer, lime, and Flexterra HP-FGM or approved equal mulch using hydraulic equipment.

b. Equipment to have built-in agitation system with capacity to agitate, suspend and homogeneously mix a slurry of the specified amount of fiber, fertilizer, seed, lime, and water.

c. Minimum capacity of slurry tank: 1000 gallons.

d. Apply Flexterra HP FGM or approved equal, as defined in Section 2.01, at a rate of 3000 LBS/ACRE or 68 LBS/1000 sq. ft.

e. Regulate slurry mixture so that amounts and rates of application will result in uniform application of all materials at not less than the specified amounts.

f. Apply slurry in two directions so as to avoid "shadowing."

g. Use color of fiber mulch as guide, spraying the prepared seed bed until a uniform visible coat is obtained.

3.06 MAINTENANCE

A. Water to prevent grass and soil from drying out.

B. Roll surface to remove minor depressions or irregularities.

C. Control growth of weeds. Apply herbicides in accordance with manufacturer's instructions.

D. Remedy damage resulting from improper use of herbicides.

E. Areas not showing satisfactory evidence of germination within six weeks of the seeding or which show bare spots, shall be immediately reseeded, fertilized and/or mulched.

F. Protect seeded areas with warning signs during maintenance period.

G. Maintain all seeded areas in satisfactory condition until final acceptance of Work.

H. Repair any eroded areas.

I. Mow as necessary to maintain healthy growth rate until final acceptance of the Work.

3.07 ACCEPTANCE

A. Permanently seeded areas will be accepted when the stand of grass reaches 70% coverage.

B. No acceptance will be made of temporary seeded areas.

3.08 MEASUREMENT AND PAYMENT

A. No separate measurement or direct payment will be made for the work under this Section and all costs for same shall be included in the price bid for the item to which it pertains.

END OF SECTION

SECTION 33 41 00

STORM UTILITY DRAINAGE PIPING

PART 1 GENERAL

1.01 SECTION INCLUDES

A. Storm drainage piping, fittings, and accessories.

B. Drop Inlets, Site surface drainage, Detention outlet structure, and Detention basin.

1.02 RELATED REQUIREMENTS

A. Section 01 71 23 - Field Engineering

B. Section 31 23 16 – Excavation

C. Section 31 23 23.13 – Backfill and Compaction

D. Section 31 23 16.13 - Trenching for Site Utilities

E. Section 03 30 00 - Cast-in-Place Concrete.

1.03 DEFINITIONS

A. Bedding: Fill placed under, beside and directly over pipe, prior to subsequent backfill operations.

1.04 REFERENCE STANDARDS

A. AASHTO M 36 - Standard Specification for Corrugated Steel Pipe, Metallic-Coated, for Sewers and Drains; American Association of State Highway and Transportation Officials; 2003.

B. ASTM A74 - Standard Specification for Cast Iron Soil Pipe and Fittings; 2013a.

C. ASTM C12 - Standard Practice for Installing Vitrified Clay Pipe Lines; 2013.

D. ASTM C14 - Standard Specification for Non-reinforced Concrete Sewer, Storm Drain, and Culvert Pipe; 2011.

E. ASTM C14M - Standard Specification for Non-reinforced Concrete Sewer, Storm Drain, and Culvert Pipe [Metric]; 2011.

F. ASTM C76 - Standard Specification for Reinforced Concrete Culvert, Storm Drain, and Sewer Pipe; 2013a.

G. ASTM C76M - Standard Specification for Reinforced Concrete Culvert, Storm Drain, and Sewer Pipe [Metric]; 2013a.

H. ASTM C425 - Standard Specification for Compression Joints for Vitrified Clay Pipe and Fittings; 2004 (Reapproved 2009).

I. ASTM C443 - Standard Specification for Joints for Concrete Pipe and Manholes, Using Rubber Gaskets; 2012.

J. ASTM C443M - Standard Specification for Joints for Concrete Pipe and Manholes, Using Rubber Gaskets (Metric); 2011.

K. ASTM C700 - Standard Specification for Vitrified Clay Pipe, Extra Strength, Standard Strength, and Perforated; 2011.

L. ASTM D1785 - Standard Specification for Poly (Vinyl Chloride) (PVC) Plastic Pipe, Schedules 40, 80, and 120; 2012.

M. ASTM D2321 - Standard Practice for Underground Installation of Thermoplastic Pipe for Sewers and Other Gravity-Flow Applications; 2011.

N. ASTM D2729 - Standard Specification for Poly (Vinyl Chloride) (PVC) Sewer Pipe and Fittings; 2011.

O. ASTM D2751 - Standard Specification for Acrylonitrile-Butadiene-Styrene (ABS) Sewer Pipe and Fittings; 2005.

P. ASTM D3034 - Standard Specification for Type PSM Poly (Vinyl Chloride) (PVC) Sewer Pipe and Fittings; 2008.

1.05 SUBMITTALS

A. See Section 01 30 00 - Administrative Requirements, for submittal procedures.

B. Product Data: Provide data indicating pipe, pipe accessories, and pipe class.

C. Manufacturer's Installation Instructions: Indicate special procedures required to install Products specified.

D. Manufacturer's Certificate: Certify that products meet or exceed specified requirements.

E. Project Record Documents:

1. Record location of pipe runs, connections, catch basins, cleanouts, and invert elevations.

2. Identify and describe unexpected variations to subsoil conditions or discovery of uncharted utilities.

1.06 REGULATORY REQUIREMENTS

A. Conform to applicable code for materials and installation of the Work of this section.

PART 2 PRODUCTS

2.01 PIPE MATERIALS

A. Concrete Pipe: Reinforced, ASTM C 76 (ASTM C 76M), Class III with Wall Type A; mesh, Tongue and Groove end joints.

B. Furnish pipe with joints designed for flexible watertight gaskets.

C. Reinforced Concrete Pipe Joint Device: ASTM C443 (ASTM C443M) rubber compression gasket joint.

2.02 CATCH BASIN, TRENCH DRAIN, CLEANOUT AND AREA DRAIN COMPONENTS

A. Precast drop inlets, catch basins, outlet structures, etc. shall be as manufactured by Tindall Concrete Products, Inc. or approved equal units by others

.

B. All other precast structures (i.e., headwalls, flared end sections, etc.) shall be approved by Engineer prior to installation.

C. Use precast manholes:

1. Provide reinforced precast concrete ring and eccentric cone sections complying with ASTM C-478 and the following.

2. Use Portland cement complying with ASTM C-150, Type II.

3. Cast ladder rungs into the units.

4. Provide tongue and groove or O-ring rubber gasketed joints.

5. Use vulcanized butyl rubber sealant with tongue and groove joints.

6. Provide flat slab tops where manhole depth is less than 4'0".

D. Steps:

1. Use aluminum or plastic steps.

2. Provide steps having non-skid top surfaces, safety stops at each end, minimum width of 10" and not less than 5" projection from wall.

3. Aluminum steps shall support 1000-pound load at center with no deformation, coat embedded ends with bituminous paint.

4. Provide polypropylene plastic steps reinforced with 3/8" diameter steel rod, M.S.A. Industries, Inc. Model PS-K, or approved equal.

E. Frames and covers:

1. Provide gray iron castings, complying with ASTM A 48, Class 30 iron.

2. Machine all bearing surfaces.

3. Provide frames weighing not less than 195 lbs. with inside opening between 21" and 24".

4. Provide circular cover with two "pick" holes and weighing not less than 120 lbs.

5. Covers to have the words "STORM SEWER" cast in the metal.

6. Coat frames and covers with two (2) shop coats of bitumastic paint.

7. Provide watertight covers, where indicated, conforming to above requirements and with frame tapped for four bolts, countersunk in cover.

a. Provide rubber gasket between frame and cover.

2.03 BEDDING AND COVER MATERIALS

A. Bedding: As specified in Section 31 23 23.13 – Backfill and Compaction.

B. Cover: As specified in Section 31 23 23.13 – Backfill and Compaction.

2.04 OTHER MATERIALS

A. Provide other materials, not specifically described but required for a complete and proper installation, as selected by the Contractor subject to the approval of the Engineer.

PART 3 EXECUTION

3.01 TRENCHING

A. See Section 31 23 16.13 – Trenching for Site Utilities for additional requirements.

B. Hand trim excavation for accurate placement of pipe to elevations indicated.

C. Backfill around sides and to top of pipe with cover fill, tamp in place and compact, then complete backfilling.

3.02 INSTALLATION – PIPE

A. Verify that trench cut is ready to receive work and excavations, dimensions, and elevations are as indicated on layout drawings.

B. Install pipe, fittings, and accessories in accordance with manufacturer's instructions. Seal watertight.

1. Plastic Pipe: Also comply with ASTM D2321.

C. Lay pipe to slope gradients noted on layout drawings; with maximum variation from true slope of 1/8 inch in 10 feet.

D. Connect to building storm drainage system, foundation drainage system, and utility/municipal sewer system.

E. Make connections through walls through sleeved openings, where provided.

F. Connect to building collection pits, through installed sleeves.

3.03 INSTALLATION - CATCH BASINS, TRENCH DRAINS AND CLEANOUTS

A. Form bottom of excavation clean and smooth to correct elevation.

B. Form and place cast-in-place concrete base pad, with provision for sanitary sewer pipe end sections.

C. Level top surface of base pad; sleeve concrete shaft sections to receive storm sewer pipe sections.

D. Establish elevations and pipe inverts for inlets and outlets as indicated.

E. Mount lid and frame level in grout, secured to top cone section to elevation indicated.

3.04 FIELD QUALITY CONTROL

A. If tests indicate Work does not meet specified requirements, remove Work, replace and retest at no cost to Owner.

3.05 PROTECTION

A. Protect pipe and bedding cover from damage or displacement until backfilling operation is in progress.

END OF SECTION