Photo Credit: Bill Stokes

Unified Development Ordinance

Adopted November 28, 2016

Amended through June 22, 2020

Planning Department
101 North Main Street
Lancaster, SC 29720
803.285.6005
www.mylancastersc.org

Lancaster County UDO – TABLE OF CONTENTS

1 INTRODUCTORY PROVISIONS

1.1 LEGAL PROVISIONS 1-1
1.2 ZONING MAP 1-4
1.3 ZONING DISTRICTS 1-5
1.4 GENERAL PROVISIONS 1-6

2 DISTRICT STANDARDS

2.1 INTENT 2-1
2.2 OFFICIAL ZONING MAP 2-1
2.3 DISTRICTS 2-1
2.4 DISTRICT DEVELOPMENT STANDARDS 2-6
2.5 USES PERMITTED 2-10

3 MIXED-USE DISTRICTS

3.1 INTENT 3-1
3.2 MIXED-USE DISTRICTS 3-1
3.3 BUILDING TYPES ESTABLISHED 3-2
3.4 BUILDING TYPES ALLOWED BY DISTRICT 3-4
3.5 URBAN DISTRICT DEVELOPMENT STANDARDS 3-5
3.6 BUILDING TYPE DEVELOPMENT STANDARDS 3-6
3.7 BUILDING ELEMENTS 3-26
3.8 RULES FOR ALL BUILDING TYPES 3-29
3.9 LAND USE 3-34
3.10 SITE DEVELOPMENT 3-34
3.11 STREET TYPES 3-35
3.12 ADMINISTRATION 3-38

4 OVERLAY DISTRICTS

4.1 GENERAL PROVISIONS 4-1
4.2 ENVIRONMENTAL OVERLAYS 4-1
4.3 CORRIDOR OVERLAYS 4-15
4.4 CHARACTER PROTECTION OVERLAYS 4-36

5 USE REGULATIONS

5.1 APPLICABILITY 5-1
5.2 RESIDENTIAL USES 5-2
5.3 LODGING USES 5-7
5.4 OFFICE/SERVICE USES 5.8
5.5 COMMERCIAL/ENTERTAINMENT USES 5-11
5.6 CIVIC USES 5-18
5.7 EDUCATIONAL/INSTITUTIONAL USES 5-21
5.8 AUTOMOTIVE USES 5-22
5.9 INDUSTRY/WHOLESALE/STORAGE USES 5-24
5.10 AGRICULTURE USES 5-37
5.11 INFRASTRUCTURE USES 5-38
5.12 OTHER 5-46

6 SUBDIVISION AND INFRASTRUCTURE STANDARDS

6.1 PURPOSE AND INTENT 6-1
6.2 SCOPE AND APPLICABILITY 6-1
6.3 REQUIRED IMPROVEMENTS FOR ALL DEVELOPMENT 6-3
6.4 CONNECTIVITY 6-3
6.5 COUNTY STREET CLASSIFICATION AND DESIGN 6-6
6.6 SIDEWALKS AND OTHER PEDESTRIAN FACILITIES 6-7
6.7 BICYCLE FACILITIES 6-9
6.8 TRANSPORTATION IMPACT ANALYSIS 6-10
6.9 IMPROVEMENT GUARANTEES 6-14
6.10 EASEMENTS AND DEDICATIONS 6-15
6.11 STREET NAMES AND HOUSE NUMBERS 6-15
6.12 UNIFORM ADDRESSING AND NUMBERING 6-18

6.13 ROADS, BRIDGES, AND PUBLIC WAYS 6-21
6.14 ROAD CONSTRUCTION STANDARDS 6-23
6.15 SIDEWALK STANDARDS 6-31
6.16 UTILITY TRENCH COMPACTION 6-31
6.17 INSPECTIONS 6-31
6.18 UTILITIES 6-32

7 GENERAL DEVELOPMENT STANDARDS

7.1 LANDSCAPING AND SCREENING 7-1
7.2 PARKING AND DRIVEWAYS 7-18
7.3 LIGHTING 7-28
7.4 SIGNS 7-31

8 NATURAL RESOURCES PROTECTION

8.1 GENERAL 8-1
8.2 PROVISIONS FOR FLOOD HAZARD REDUCTION 8-4
8.3 STORMWATER PERMITS-GENERAL 8-12
8.4 SEDIMENT & EROSION CONTROL PERMITS WITHIN THE COUNTY'S REGULATED MS-4 8-16
8.5 SEDIMENT & EROSION CONTROL PERMITS OUTSIDE THE COUNTY'S REGULATED MS-4 8-26
8.6 ENVIRONMENTALLY SENSITIVE LANDS 8-26
8.7 STORMWATER CONVEYANCE SYSTEMS 8-30
8.8 WAVIERS AND APPEALS 8-31
8.9 ACCESS AND INSPECTION 8-32
8.10 ILLICIT DISCHARGES, CONNECTIONS, SPILLS, AND NUISANCES 8-32
8.11 STORMWATER MANAGEMENT UTILITY ESTABLISHED, ADMINISTRATION, POWERS AND DUTIES 8-34

9 ADMINISTRATION

9.1 REVIEW AGENCIES 9-1
9.2 REVIEW PROCEDURES 9-6
9.3 NONCONFORMITIES 9-52
9.4 VIOLATIONS AND PENALTIES 9-58

10 DEFINITIONS

10.1 INTENT 10-1
10.2 RULES OF CONSTRUCTION 10-1
10.3 DEFINITIONS, USE TYPE 10-2
10.4 DEFINITIONS, GENERALLY 10-13

APPENDIX A: LEGACY PLANNED DEVELOPMENT DISTRICTS

APPENDIX B: HIGHWAY CORRIDOR OVERLAY DISTRICT SUPPLEMENTARY DIAGRAMS

APPENDIX C: MANUAL OF SPECIFICATIONS AND STANDARD DETAILS (MSSD)

1 INTRODUCTORY PROVISIONS

1.1 LEGAL PROVISIONS

1.1.1 TITLE

These development ordinances and map delineating the location and use of land for trade, industry, housing, recreation, and other uses, and dividing such uses into zones or zoning districts each with design and development standards, shall be known as the Unified Development Ordinance, or UDO.

1.1.2 AUTHORITY

The development regulations contained in the UDO have been adopted pursuant to the authority conferred by the South Carolina Code of Laws, as amended. Specifically, principal authorization comes in the South Carolina Code of Laws, Title 6, Chapter 29 (South Carolina Local Government Comprehensive Planning Enabling Act of 1994), as amended. The Lancaster County UDO also uses powers granted in other sections of the South Carolina Code of Laws, as amended, relating to particular types of development or particular development issues.

1.1.3 JURISDICTION

The provisions of the UDO shall apply within the boundaries of Lancaster County, South Carolina and outside of the incorporated jurisdictions, as identified on the Zoning Map of Lancaster County. A digital copy of the Zoning Map is on file with the Administrator of this ordinance. The map and its boundaries shall be incorporated and made a part of this ordinance.

1.1.4 PURPOSE AND INTENT

The regulations contained in the UDO have been adopted in accordance with the Comprehensive Plan for Lancaster County, South Carolina, as adopted, in order to:

A. Promote a strong, diverse economy that supports a wide variety of businesses and enterprises.

B. Provide sustainable, well-managed growth that maintains quality of life, protects open space and environmental quality, retains the natural character of the region, and maximizes the efficiency of the infrastructure investments.

C. Promote a safe and healthy environment with good air and water quality.

D. Support increased collaboration among jurisdictions on issues that transcend boundaries, including growth management, transportation, and environmental concerns, in a manner that recognizes both regional and local needs.

E. Promote community leadership and cooperative volunteerism for all residents.

F. Create high quality educational opportunities that are available to all residents.

G. Encourage community and stakeholder collaboration in development decisions, which are predictable, fair, and cost effective.

H. Preserve open space, farmland, natural beauty, and critical environmental areas.

I. Strengthen and direct development towards existing communities.

J. Encourage mix of land uses with compact building design and walkable neighborhoods.

K. Create a range of housing opportunities and choices.

L. Foster distinctive, attractive communities with a strong sense of place.

1.1.5 CONSISTENCY WITH ALL ADOPTED PLANS AND POLICIES

A. PLANS AND POLICIES

In accordance with South Carolina Code of Laws, Title 6, Chapter 29, as amended, all development plans and subdivision master plans shall be in conformance with all adopted plans and policies (including comprehensive plans, transportation plans, neighborhood plans, open space and greenway plans, corridor plans, or any other plan adopted by the Lancaster County Council).

B. PLAN IMPLEMENTATION

The UDO is intended to apply the goals, policies, and implementation actions of the Comprehensive Plan for Lancaster County as adopted on December 8, 2014 and any plans, policies, and resolutions incorporated by reference into that document.

C. UDO AND COMPREHENSIVE PLAN AMENDMENTS

Any amendments to, or actions pursuant to, this ordinance should be consistent with the Comprehensive Plan. The Comprehensive Plan for Lancaster County may be amended, and this Unified Development Ordinance and the incorporated Zoning Map should reflect those changes.

D. VARIATIONS TO ADOPTED PLANS

Specific alignments, locations, or areas of public facilities noted in any adopted plan may be varied on a site by site basis as requested by the developer or the Administrator, provided the integrity of the proposed network and connections, location, or area shown in the plan are maintained. Such variations are subject to the authority of the appropriate approving agency as described in Chapter 9.

E. CONFLICTS WITH ADOPTED PLANS

In the event of a conflict or inconsistency between this ordinance and any adopted plans, the requirements of this ordinance shall take precedence.

1.1.6 REQUIRED CONFORMANCE WITH THIS ORDINANCE AND OTHER LAWS

A. No land or structure shall be used or occupied, and no structure or parts shall be constructed, erected, altered, or moved, unless in conformity with all of the regulations herein specified for the zoning district in which it is located and all other applicable local, state, and federal laws. Every building erected, moved, or structurally altered shall be located on a lot conforming to the requirements of the district.

B. From and after the adoption of the UDO, no real property lying within the unincorporated areas of Lancaster County shall be subdivided except in conformance with all applicable provisions of the UDO. In addition, after the effective date of the UDO, no plat for subdivision of land within the unincorporated areas of Lancaster County shall be certified for recording by the Administrator until it has been submitted and approved in accordance with the provisions of the UDO.

C. All existing lots of record, platted prior to the adoption of this ordinance and upon which no buildings have been erected, shall be grandfathered upon the date of adoption of this ordinance and shall not be subject to the new lot standards herein. However, buildings upon such lots shall be subject to standards in this ordinance, including all related site improvements.

D. All development approvals granted in accordance with the UDO and other County ordinances and policies in effect prior to the effective date for this ordinance established in Section 1.1.11, shall have until 2 years to complete the approved development under the terms of the previous ordinances and policies. After such time, all development must be completed in accordance with the provisions of this UDO.

1.1.7 TRANSITIONAL PROVISIONS

The following transitional provisions shall apply to various activities, actions, and other matters pending or occurring as of the effective date of this ordinance.

A. CONTINUATION OF PERMITS AND APPROVALS ISSUED UNDER PREVIOUS ORDINANCES

Any approval or permit issued for a building, development, or use of property prior to the effective date of the UDO, or any amendment thereto, shall continue to be valid according to the terms of the ordinance under which such approval or permit was granted. If such building, development, or use of property does not comply with the requirements in this ordinance, it shall be subject to the standards of Chapter 9 as a nonconforming use or structure.

B. CONTINUATION OF VIOLATIONS

Any violation of any previous ordinance of Lancaster County shall continue to be a violation under this ordinance and shall be subject to the penalties set forth at the time of the violation, unless the use, development, construction, or other activity is clearly consistent with the express terms of this ordinance.

C. COMPLETION OF CURRENT DEVELOPMENT PLANS UNDER PREVIOUS ORDINANCES

1. Permit Issued

Any building or development for which a permit was issued prior to the effective date of the UDO, or any amendment thereto, may be completed in conformance with the issued permit and other applicable permits and conditions.

2. Application Filed

a. Any type of land development application which has been officially filed with the appropriate County official prior to the effective date of this ordinance or any amendment thereto, may continue to be processed under the land use rules and regulations in effect prior to said date.

b. The application approval process for such applications must be completed within 2 years of the filing date.

c. If the application approval process is not completed within the specified time, then the application process may be completed only in strict compliance with the requirements of this ordinance.

d. The specified time may be extended at the discretion of the Administrator due to delays in approvals from agencies external to Lancaster County.

1.1.8 CONFLICT WITH OTHER LAWS

A. This ordinance is not intended to abrogate any other law, ordinance, or regulation. However, wherever the requirements of this ordinance are in conflict with other requirements of laws of the United States or the State of South Carolina, or with other lawfully adopted County rules, regulations, ordinances, and policies, the most restrictive, or that imposing the highest standards, shall govern.

B. Except as hereinafter provided, these regulations shall not be deemed to interfere with, abrogate, annul, or otherwise affect in any manner whatsoever any easement, covenants, or other agreements between parties. However, where the regulations of this chapter are more restrictive or impose higher standards or requirements than such easement, covenant, or other private agreement, then the requirements of this ordinance shall govern. Unless deed restrictions, covenants, or other contracts directly involve Lancaster County as a party in interest, the County shall have no administrative responsibility for enforcing such deed restrictions or covenants.

C. In the event of a conflict or inconsistency between the text of the UDO and any caption, figure, illustration, or map contained herein, the text shall control.

1.1.9 SEVERABILITY

It is the legislative intent that, in adopting this ordinance, all of its provisions shall be liberally construed to protect and preserve the peace, health, safety, and general welfare of Lancaster County. It is the further legislative intent of the County Council that this ordinance shall stand, notwithstanding the invalidity of any part, and that, should any provision of this ordinance be held to be unconstitutional or invalid, such holding shall not be construed as affecting the validity of the remaining provisions.

1.1.10 INTERPRETATION

In interpreting and applying these regulations, the requirements contained herein are declared to be the minimum requirements necessary to carry out the purpose of these regulations and are adopted for the promotion of the public health, safety, and general welfare of Lancaster County.

1.1.11 EFFECTIVE DATE

Many provisions herein are a restatement of previous provisions of the zoning, subdivision, and other officially adopted ordinances. Those provisions are hereby continued without interruption. All other provisions of this ordinance shall become effective November 28, 2016.

1.2 ZONING MAP

1.2.1 OFFICIAL ZONING MAP

A. **Zoning Districts:** The boundaries of each zoning district are shown on a map entitled "Lancaster County Official Zoning Map" which is hereby made a portion of this ordinance.

B. **Overlay Districts:** Certain overlay districts such as the Carolina Heelspliter Overlay District, Carolina Thread Trail Overlay District, Cluster Subdivision Overlay District, Equestrian Oriented Subdivision Overlay District, Highway Corridor Overlay District, and McWhirter Field Aviation Overlay District are hereby established and incorporated by reference.

C. **Administration and Maintenance of Zoning Map:** The Official Zoning Map shall be maintained in the Lancaster County Planning Department. The Administrator shall separately maintain the digital files that comprise the map. All map amendments will also be contained within these digital files.

1.2.2 INTERPRETATION OF BOUNDARIES

When uncertainty exists with respect to the boundaries or districts as shown on the Official Zoning Map, the following rules shall apply:

A. District boundary lines are generally intended to be along or parallel to property lines or lot lines or the center line of streets, alleys, railroads, easements, rights-of-way, creeks, streams, or other water channels.

B. In the absence of specified distances on the map, dimensions or distances shall be determined by the scale of the Official Zoning Map.

C. Where the Zoning Map shows a district boundary dividing a lot, each part of the lot shall conform to the standards established by this ordinance for the land development or overlay district in which that part is located.

D. When the street or property layout existing on the ground is at variance with that shown on the Official Zoning Map, the Administrator shall interpret the district boundaries of this ordinance in accordance with Chapter 9.

1.3 ZONING DISTRICTS

1.3.1 GENERAL USE ZONING DISTRICTS

The following general use zoning districts are established and applied to property as set forth on the Official Zoning Map:

Rural Districts

- **AR** Agricultural Residential
- **RR** Rural Residential
- **RN** Rural Neighborhood
- **RUB** Rural Business
- **MH** Manufactured Housing

Special Districts

- **INS** Institutional
- **OSP** Open Space Preservation
- **LI** Light Industrial
- **HI** Heavy Industrial
- **M** Mining

Transitional Districts

- **LDR** Low Density Residential
- **MDR** Medium Density Residential
- **PB** Professional Business
- **NB** Neighborhood Business
- **GB** General Business
- **RB** Regional Business

Neighborhood Mixed-Use Districts

- **UR** Urban Residential
- **HDR** High Density Residential
- **RMX** Residential Mixed-Use
- **MX** Mixed-Use
- **IMX** Industrial Mixed-Use

1.3.2 OVERLAY DISTRICTS

The following overlay districts are established and applied to property as set forth on the Official Zoning Map:

- **CHO** Carolina Heelspliter Overlay
- **CTTO** Carolina Thread Trail Overlay
- **CSO** Cluster Subdivision Overlay
- **ESO** Equestrian Oriented Subdivision Overlay
- **HCO** Highway Corridor Overlay
- **MFAO** McWhirter Field Aviation Overlay

Note: Standards for flood damage prevention and river buffers are included in Chapter 8, Natural Resources Protection.

1.3.3 LEGACY DISTRICT

The following district is referred to as a legacy district:

- **PDD** Planned Development District

This district exists in the previous UDO Chapter 2, Zoning Districts and Zoning Map, and will eventually be replaced with a UDO zoning district in 1.3.1. No new legacy district may be added to the Official Zoning Map, nor may any boundary of an existing legacy district be modified. Refer to Appendix A, Legacy Planned Development Districts (PDD), for PDD district numbers, names, ordinance numbers, and development agreement ordinance numbers, as applicable.

1.4 GENERAL PROVISIONS

1.4.1 APPLICABILITY

The provisions of this chapter shall apply generally to all development regardless of the underlying zoning district provisions.

1.4.2 INTERPRETATION OF DIMENSIONAL AND DENSITY STANDARDS

When any requirement of this ordinance results in a fraction of a unit, a fraction of ½ or more shall be considered a whole unit and a fraction of less than ½ shall be disregarded. When the determination of the number of dwelling units permitted on a lot results in a fraction of a dwelling unit, any fractional component shall be disregarded and rounded down to the nearest whole number.

1.4.3 BASIC LOT AND USE STANDARDS

A. LOT DIVISIONS

1. **Lot Lines:** Unless otherwise noted on an existing lot on record or natural features such as streams, side lot lines shall be substantially at right angles to straight street lines and radial to curved street lines for a minimum distance of 100 feet from the front lot line.

2. **Corner Lots:** Corner lots and lots abutting a sidewalk for residential uses shall have extra width to permit appropriate building setback from and orientation to both streets.

3. **Lot Remnants:** All remnants of lots below the minimum required size for the district that are left over after subdividing a larger tract must be added to adjacent lots, rather than allowed to remain as unusable parcels.

B. LOTS TO FRONT ON STREET OR APPROVED PUBLIC SPACE

1. **Stormwater Lots:** Lots platted for the sole purposes of being sites for stormwater control structures or as conservation areas shall not be required to abut a street. Adequate access by easement shall be provided.

2. **Commercial or Mixed-Use Lots:** Commercial or mixed-use buildings (as defined in Chapter 10) may be erected or used on a lot which does not abut a dedicated street provided that the lot is part of a development in which other individual lots abut a street, and provided the lot fronts one of the following:

   a. A privately-maintained drive in a public parking area; or

   b. An approved open space or park shared with other lots; or

   c. Some other designated area used in common with other lots.

3. **Alley Access Residential Lots:** With provision of alley access, residential lots may front upon a public open space, but access shall be of sufficient design to allow for the provision of emergency services.

4. **Other Lots:** All other lots shall front upon a street right-of-way constructed to the infrastructure standards given in Chapter 6.

C. INTERPRETATION OF DIMENSIONAL STANDARDS

1. **Yard Requirements**

   a. **General:** A building, structure, or lot shall not be developed, used, or occupied unless it meets the minimum yard requirements for the district, and any applicable overlay district, in which it is located.

b. Calculating Yards: The minimum yard is the area defined by measuring perpendicularly from, and along the entire boundary of, the lot line (property line) to the building line as shown in the diagram below:

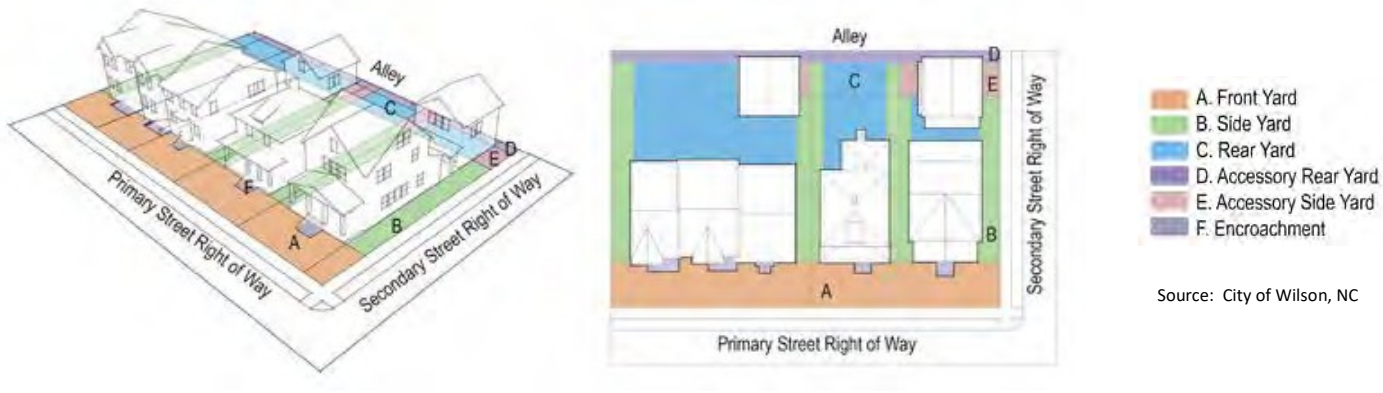

Source: City of Wilson, NC

c. Assumed Right-of-Way: Where no right-of-way exists, or if the right-of-way is only inclusive of the street pavement, then the front setback shall be measured from an assumed right-of-way line that is parallel to the edge of the pavement and setback a minimum of 10 feet. This calculation is for setback calculation purposes only and does not represent any expressed or implied taking of property.

2. Irregular Lot Setbacks

a. General: The location of required front, side, and rear yards (or setbacks) on irregularly shaped lots shall be determined by the Administrator. The determination will be based on the intent and purpose of this ordinance to achieve an appropriate spacing and location of buildings and buildings on individual lots. Where questions arise as to appropriateness, the subdivider may be requested to provide additional design information.

Source: City of Wilson, NC

b. Setbacks Along Thoroughfares: Setbacks along thoroughfares shall be measured from the future right-of-way only if there is a specifically-adopted corridor plan that shows, at a minimum, the horizontal alignment of the future roadway, pedestrian and bicycle amenities, streetscape, and necessary right-of-way.

1.4.4 INFILL LOT AND HOME ADDITIONS

A. INFILL LOTS

1. Front Yard and Street Yard: The minimum front or street yard required may be reduced for any lot where the average established front yard on developed lots located within 300 feet on each side of such lot, and fronting on the same street as such lot, is less than the minimum required yard. In such cases, the minimum front or street yard may be less than that required, but not less than the average of the

existing front yards on the developed lots within 300 feet of each side.

2. **Side Yard and Lot Width:** For existing vacant lots and for new lots created from existing larger lots, the lot width at the front line and the side yard setbacks shall be consistent with the immediately adjacent neighboring parcels on the same side of the street.

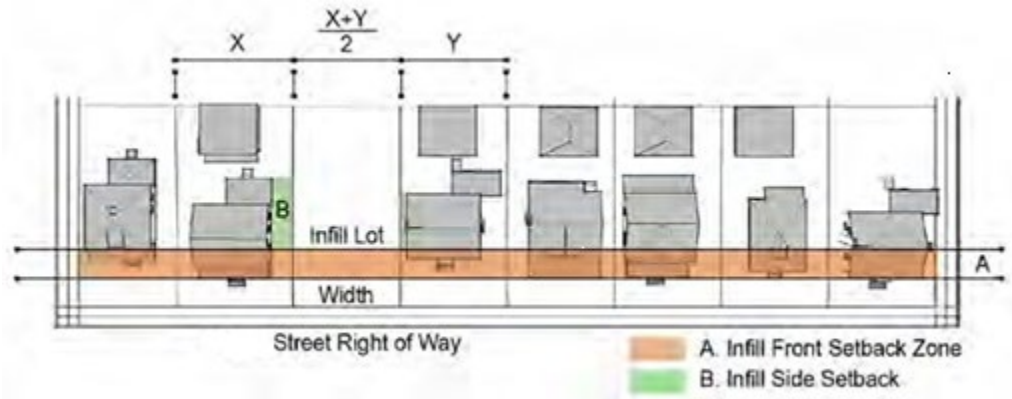

Source: City of Wilson, NC

B. ADDITIONS TO DWELLINGS

1. **Garage Additions:** The required front or street yard for any garage addition to single family homes or two family dwellings shall be the average established front yard on developed lots located within 300 feet on each side of the proposed addition and fronting on the same street as the proposed addition.

2. **All Other Additions:** All other additions to single family homes shall comply with the front and street setbacks established for that district in Chapter 2 and Chapter 3.

1.4.5 ENCROACHMENTS

The features listed below may encroach into a required yard:

A. **Arcades:** Building arcades, if provided, should be designed to avoid the swing of car doors parked parallel to the arcade. In addition, the sidewalk within the arcade should be sufficient to accommodate the intended uses (i.e. outdoor seating) while providing suitable clearances per the Americans with Disabilities Act Accessibility Guidelines (ADAAG).

B. **Awnings and Canopies:** All awnings and canopies, if provided, shall be supported by means of a frame attached directly to the building receiving beneficial use of the awning. In no case shall awnings be supported by a frame attached to a sidewalk or other public right-of-way. Awnings may encroach up to 6 feet into any required front or street yard. Where the required front or street yard is less than 6 feet, awnings may encroach over the sidewalk, but shall not encroach into the street tree planting area or across the street edge of the sidewalk. All awnings and canopies shall allow for a minimum height clearance of at least 8 feet.

C. **Bay Windows and Balconies:** Bay windows, balconies, and similar features projecting from the principal building may encroach up to 3 feet into any yard. Lots with side setbacks less than 10 feet shall not encroach into side setbacks.

D. **Cornices and Gutters:** Cornices and gutters may encroach up to 2 feet into rear required yard.

E. **Fences and Garden Walls:** Fences and garden/yard walls may encroach into required yards, but if higher than 2 feet may not be placed within the site visibility triangle of a street, private street or driveway contained either on the property or on an adjoining property. See Section 6.14.1.J concerning the sight visibility triangle.

F. Handicapped Ramps: Ramps for handicap accessibility and fire escapes that are required by the International Building Code may encroach into any required yard, but may not be closer than 3 feet to any property line.

G. Decks and Patios: Uncovered and unenclosed decks, patios, and other similar above grade features not exceeding an average finished-height-above-grade of 30 inches may encroach into the side and rear setback, but may not be closer than 15 feet to any property line. Lots with side setbacks less than 10 feet shall not encroach into side setbacks.

H. Swimming Pools: Outdoor swimming pools may encroach to within 15 feet of a side or rear property line adjoining a street right-of-way, and to within 5 feet of any other side or rear property line. Lots with side setbacks less than 10 feet shall not encroach into side setbacks.

I. Public Rights-of-Way Encroachments (Air Rights): With approval of the County or South Carolina Department of Transportation (whichever has authority over a street), upper story balconies or bay windows may encroach into the right-of-way, but shall be a minimum of 3 feet behind the curb, and shall allow for a minimum height clearance of at least 8 feet when such encroachments protrude over a sidewalk or pedestrian path.

J. Porches, Steps, and Stairs: Porches, steps, and stairs may not encroach into the public right-of-way. The Administrator may waive this requirement and allow any steps and stairs as deemed necessary for pedestrian access to lots with steep topography.

1.4.6 MEASUREMENT OF HEIGHT (Ord. No. 2019-1608, 11.12.19)

Building heights shall be as specified in Chapter 2 and Chapter 3 and shall be determined according to the provisions below.

A. STORY

A story is a habitable level within a building of no more than 14 feet in height from finished floor to finished ceiling. Unoccupied attics less than 7 feet in height and raised basements less than 6 feet in height (as measured from the average grade of the fronting sidewalk) are not considered stories for the purposes of determining building height. A mezzanine shall be considered a story if it is contiguous with at least 60 percent of the building's front facade, is designed to be occupiable, and maintains an average depth of at least 16 feet. A penthouse shall be considered a story if it exceeds ⅓ of the area of the roof. The under-roof area with dormers does not count as a story.

Unfinished space beneath the base floor elevation of structures which are raised to meet base floor elevation requirements in floodplains are not considered stories for the purposes of determining building height.

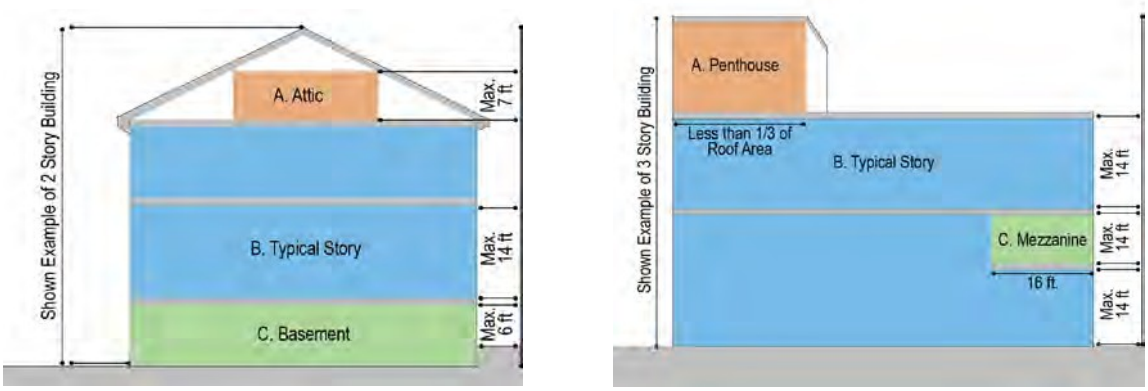

Source: City of Wilson, NC

B. DIMENSIONAL HEIGHT STANDARDS FOR STRUCTURES

Where a specific dimension is used in the calculation of height, it shall be measured from the highest ground level at the structure foundation to the highest point of the structure, excluding chimneys and antennas.

1.4.7 ACCESSORY USES AND STRUCTURES

The purpose of this section is to establish standards for accessory uses and structures in Lancaster County's land use jurisdiction. Except as provided elsewhere in this chapter, it shall be unlawful for any person to erect, construct, enlarge, move, or replace any accessory use or structure without first obtaining a Zoning Permits from the Administrator.

A. GENERAL

1. **Accessory Uses and Structures:** Accessory uses and structures may only be used for purposes permitted in the district in which they are located.
2. **Not for Dwelling Purposes**: Accessory structures shall not be used for dwelling purposes except as approved Accessory Dwelling Units (see Section 5.2.3).
3. **Building Permits May Be Required:** Depending on the size of the structure and the incorporation of various improvements (e.g., electrical, plumbing), a building permit may also be required.

B. LOCATION, MAXIMUM NUMBER, AND MAXIMUM AREA

Standards	Single-Family/Two-Family Lots – Less than ½ Acre	Single-Family/Two-Family Lots – ½ Acre to 2 Acres	All Other Uses and Lots Larger than 2 Acres
1. Permitted Location	Side/rear yard only	Side/rear yard only	Permitted in all yards – may not be closer than 30 ft.to right-of-way
2. Maximum Number Permitted	2	2	No maximum
3. Maximum Building Footprint	750 sq. ft. per structure; Aggregate area no greater than 75% of the principal structure	1500 sq. ft. per structure; Aggregate area no greater than 75% of the principal structure	No maximum

C. OTHER REQUIREMENTS

1. **Distance to Single Family Dwelling:** No accessory uses and/or structures shall be closer than the distance specified in the currently-applicable building code to a single family dwelling; except that an unenclosed (open on all sides) carport and/or an unenclosed breezeway no wider than 9 feet at its widest point may be attached to or placed any distance from a principal building.
2. **Lighting**: Exterior lighting for accessory uses and/or structures shall meet the requirements by which principal structures are governed as set forth in Chapter 7.

D. EXCEPTIONS

The following accessory uses are exempt from the locational requirements of this section and the setback requirements in Chapter 2 as noted below:

1. Transit shelters and bicycle racks may be located in the front or side yard as necessary.
2. Backflow preventers and other customary utility structures may be located in the front yard as necessary.
3. Gatehouses and gazebos, including security gatehouses, may be located in the front yard provided they do not have a footprint greater than 100 square feet.

4. Neighborhood entrance ground signs may be located in the front or side yard of a lot according to the standards of Chapter 7.

5. Neighborhood gatehouses including security gatehouses, may be located in the front yard provided they do not have a footprint greater than 250 square feet.

6. Up to 2 small accessory uses and/or structures, child play structures, or backyard pens/coops located in the side or rear yard are exempt from the limitations in Chapter 2. To be considered exempt, such accessory buildings shall not, under the International Building Code, be required to obtain a building permit.

E. WIRELESS TELECOMMUNICATION FACILITIES AS ACCESSORY STRUCTURES

The following facilities shall be allowed as accessory structures provided they are "related to" and "customarily incidental" to the principal use and/or structure:

1. Television satellite dishes.

2. Antennas and their support structures (including combinations of the two) 60 feet in height or less.

3. Antennas and their support structures (including combinations of the two) more than 60 feet in height, but less than 100 feet provided such structures are accessory to a residence.

2 DISTRICT STANDARDS

2.1 INTENT

For the purposes of this ordinance, the various districts have been categorized as either urban districts as neighborhood mixed-use or rural/suburban districts as rural, transitional, and special districts. In general, standards and provisions for urban districts are designed to create walkable, mixed-use environments whereas the rural and suburban districts are more reflective of the existing, primarily automobile-dependent configuration. In order to implement the intent of this ordinance, there are hereby created several base districts with the designations and general purposes listed under each and the specifically permitted uses, special uses, dimensional standards, and permitted building types included.

2.2 OFFICIAL ZONING MAP

2.2.1 ZONING MAP

A. **Zoning Districts:** The boundaries of each zoning district are shown on a map entitled "Lancaster County Official Zoning Map" which is hereby made a portion of this ordinance.

B. **Overlay Districts:** Certain overlay districts such as the Carolina Heelsplitter Overlay District, Carolina Thread Trail Overlay District, Cluster Subdivision Overlay District, Equestrian Oriented Subdivision Overlay District, Highway Corridor Overlay District, and McWhirter Field Aviation Overlay District are hereby established and incorporated by reference.

C. **Administration and Maintenance of Zoning Map:** The Official Zoning Map shall be maintained in the Lancaster County Planning Department. The Administrator shall separately maintain the digital files that comprise the map. All map amendments will also be contained within these digital files.

2.2.2 INTERPRETATION OF BOUNDARIES

When uncertainty exists with respect to the boundaries or districts as shown on the Official Zoning Map, the following rules shall apply:

A. District boundary lines are generally intended to be along or parallel to property lines or lot lines or the center line of streets, alleys, railroads, easements, rights-of-way, creeks, streams, or other water channels.

B. In the absence of specified distances on the map, dimensions or distances shall be determined by the scale of the Official Zoning Map.

C. Where the Zoning Map shows a district boundary dividing a lot, each part of the lot shall conform to the standards established by this ordinance for the land development or overlay district in which that part is located.

D. When the street or property layout existing on the ground is at variance with that shown on the Official Zoning Map, the Administrator shall interpret the district boundaries of this ordinance in accordance with Chapter 9.

2.3 DISTRICTS

In order to maintain existing auto-oriented commercial and industrial areas, and conventionally-developed residential subdivisions, there are hereby continued several base districts with the designations and general purposes listed under each and the specifically permitted uses, special uses, and dimensional standards included. The mixed-use base districts are established to support pedestrian and employment centers in accordance with the adopted Comprehensive Plan.

BASE DISTRICT	DESCRIPTION
Agricultural Residential District (AR)	The Agricultural Residential District is established as a district in which the principal uses of the land are restricted due to lack of available utilities, unsuitable soil types, steep slopes, or for the protection of prime agricultural lands.
Rural Residential District (RR)	The Rural Residential District is established as a district where the principal use of the land is for large rural living tracts of property with an abundance of open space, agricultural lands, and a high degree of separation between buildings.
Rural Neighborhood District (RN)	The Rural Neighborhood District is established to protect the residential character of communities and neighborhoods in the rural area at a density of 1.0 dwelling unit per acre. The district is intended to promote rural living, protect farmland, and to maintain the low density residential.
Rural Business District (RUB)	The Rural Business District is established for rural crossroads that represent the small nodes of commercial activity along rural highways. This district will accommodate small-scale businesses, such as gas stations, convenience stores, or restaurants, and serve some daily needs of the surrounding rural population.
Manufactured Home District (MH)	The Manufactured Home District accommodates manufactured homes in a variety of settings, including manufactured home parks, manufactured home subdivisions, and a single-lot mobile home district.
Low Density Residential District (LDR)	The Low Density Residential District is established to maintain previously developed or approved single-family residential subdivisions and their related recreational, religious, and educational facilities at a density of 1.5 dwelling units per acre. Intended to act as a transitional zoning district between rural living and urban development, these regulations are further intended to discourage any use which would be detrimental to the predominately residential nature of the areas included within the district.
Medium Density Residential District (MDR)	The Medium Density Residential District is established to maintain previously developed or approved single-family residential subdivisions and their related recreational, religious, and educational facilities at a density of 2.5 dwelling units per acre. Intended to act as a transitional zoning district between rural and urban development, these regulations are further intended to discourage any use which would be detrimental to the predominately residential nature of the areas included within the district.

BASE DISTRICT	DESCRIPTION
Professional Business District (PB)	The Professional Business District is generally located adjacent to neighborhoods and provides opportunities for the provision of office and professional services that do not adversely impact the surrounding communities.
Neighborhood Business District (NB)	The Neighborhood Business District is generally located on thoroughfares and provides opportunities for the provision of neighborhood services that serve as an acceptable transition to generally auto-dependent neighborhoods.
General Business District (GB)	The General Business District is generally located on thoroughfares and provides opportunities for the provision of offices, services, and retail goods in proximity to generally auto-dependent, community neighborhoods. The regulations for this district are intended to accommodate the predominately auto-oriented pattern of existing development while encouraging the transition to pedestrian-friendly, mixed-use areas that avoid strip commercial development.
Regional Business District (RB)	The Regional Business District is generally located on the major thoroughfares in the community and provides opportunities for the provision of offices, services, and retail goods to meet the surrounding region. The regulations for this district are intended to accommodate the predominately auto-oriented pattern of existing development until such time that transportation network is retrofitted to accommodate more urban development patterns.
Institutional District (INS)	This Institutional District is intended to allow for the continued and future use, expansion, and new development of academic and religious campuses, governmental and health facilities and public and private utility infrastructure. The goal is to promote the many varied uses associated with such institutions while maintaining the overall design integrity of the campus setting and minimizing any adverse impacts on the neighboring residential areas. In the attempt to meet this goal numerous requirements are included, such as but not limited to buffers, landscaping, outdoor lighting, parking, signage, building height, setbacks, open space, and the like.
Open Space Preservation District (OSP)	The Open Space Preservation District is established to preserve and protect environmentally sensitive lands (e.g. floodways, wetlands) and properties that are already under public ownership and/or otherwise restricted for use for passive or active recreational use.

BASE DISTRICT	DESCRIPTION
Light Industrial District (LI)	The Light Industrial District is established for activities that can be operated in a relatively clean and quiet manner, and which will not be obnoxious to adjacent residential or business districts. This includes warehousing and wholesaling activities with limited contact with the general public. It is designed to prohibit most heavy industry, which should be properly segregated, and to prohibit any other use which would substantially interfere with the development of industrial establishments in the district. Limited opportunities for retail sales and services are also provided.
Heavy Industrial District (HI)	The Heavy Industrial District is established to accommodate those industrial, manufacturing, or large-scale utility operations that, by their nature, may create some nuisance and which are not properly associated with, nor compatible with, residential, commercial, and service establishments. Retailing of manufactured items may be permitted in certain instances when it is conducted on the same building site as the principal use.
Mining District (M)	The Mining District is established for large-scale operations that extract and process mineral materials. This district may create some nuisance which is not properly associated with, nor compatible with, residential, commercial, and service establishments.
Urban Residential District (UR)	The Urban Residential District is established to accommodate a variety of housing types in a neighborhood setting with a density of 4 dwellings units per acre. The regulations of this district are intended to provide areas of the community for those persons desiring urban-sized in relatively high density neighborhoods within walking or biking distance from mixed-use centers.
High Density Residential District (HDR)	The High Density Residential District is established to serve as a transitional zoning district between rural and urban developments at a density of 8.0 dwelling units per acre. These regulations are further intended to discourage any detrimental effects to the predominately single-family residential areas adjacent to the district that provides for multiple family residential dwellings.
Residential Mixed-Use District (RMX)	The Residential Mixed-Use District is intended to provide for mixed-use transitional areas immediately adjacent to or in close proximity of mixed-use centers that permit some limited commercial uses and a wide variety of housing types in pedestrian-scaled, residential-style structures.

BASE DISTRICT	DESCRIPTION
Mixed-Use District (MX)	The Mixed-Use District is established as a pedestrian-scaled, mixed-use district which caters to the everyday needs of nearby neighborhoods, stressing accessibility by automobiles, bicycles, and pedestrians. This district accommodates an active, pedestrian-friendly area of community-scale commercial, residential, office, and civic uses in both vertically mixed-use, as well as free-standing buildings. Retail should be placed at street level, with residential uses in rear or upper stories.
Industrial Mixed-Use District (IMX)	The Industrial Mixed-Use District is established to promote the development of mixed-use environments supported by artists, craftsman, and cultural activities and may be in transitional areas previously occupied by industrial development. These areas will accommodate limited commercial and institutional uses, some light industrial uses, and a wide variety of residential uses in order to encourage the redevelopment of existing warehouses and the development of a pedestrian-oriented neighborhood.

(Ord. No. 2019-1634, 1.27.20)

2.4 DISTRICT DEVELOPMENT STANDARDS

The following tables outline the primary development standards for each base zoning district in Lancaster County. For development on infill lots and additions to existing development, the standards in Chapter 1 shall also apply.

STANDARD	Agricultural Residential (AR)	Rural Residential (RR)	Rural Neighborhood (RN)	Rural Business (RUB)	Manufactured Housing (MH)
1. DEVELOPMENT STANDARDS					
A. District/Development Area (min)	n/a	n/a	n/a	n/a	n/a
B. Development/District Exterior Setback/Buffer	n/a	n/a	n/a	n/a	n/a
C. Density (max)	1 unit/acre	1 unit/acre	1 unit/acre	1 unit/acre	1 unit/acre
D. Open Space (min)	Exempt	Exempt	Exempt	Exempt	Exempt
E. Park Space (min)	Exempt	Exempt	Exempt	Exempt	Exempt
F. Building Floor Area (max)	n/a	n/a	n/a	n/a	n/a
G. Development Floor Area (max)	n/a	n/a	n/a	n/a	n/a
2. LOT STANDARDS					
A. Lot Area (min)	1.0 acre	1.0 acre	1.0 acre	1.0 acre	1.0 acre (3)
B. Lot Width at Front Setback (min)	130 lf	130 lf	130 lf	130 lf	130 lf
C. Pervious Surface (min)	65%	50%	50%	50%	50%
3. PRINCIPAL BUILDING					
A. Principal Front Setback (min)	40 ft	40 ft	40 ft	40 ft	40 ft
B. Street Side/Secondary Front Setback (min) Corner	20 ft	20 ft	20 ft	20 ft	20 ft
C. Side (from adjacent lot) Setback (min)	20 ft	20 ft	20 ft	20 ft	20 ft
D. Rear Setback (min)	25 ft	25 ft	25 ft	25 ft	25 ft
E. Other Standards	n/a	n/a	n/a	See Below (4)	n/a
4. ACCESSORY STRUCTURE					
A. Side Setback	5 ft	5 ft	5 ft	5 ft	5 ft
B. Rear Setback	5 ft	5 ft	5 ft	5 ft	5 ft
C. Other Standards	See Below (1, 2)	See Below (1, 2)	See Below (1, 2)	See Below (1, 2)	See Below (1, 2)
5. PARKING CONFIGURATION					
A. Parking Location per Section 7.2	See Chart 7.2.3	See Chart 7.2.3	See Chart 7.2.3	See Chart 7.2.3	See Chart 7.2.3
B. Parking in Exterior Setback	n/a	n/a	n/a	n/a	n/a
6. BUILDING HEIGHT					
A. Principal Building (max)	35 ft	35 ft	35 ft	35 ft	35 ft
B. Accessory Structure (max)	35 ft	35 ft	35 ft	35 ft	35 ft
C. Additional Height Permitted with Additional Setback	n/a	n/a	n/a	n/a	n/a

1. *Accessory structures over 600 sf must comply with principal setback requirement.*
2. *No accessory structures may be located on corner lots between the street and wall line of the principal structure, unless front setback requirements are provided on both streets.*
3. *Manufactured/Mobile Home Parks have additional standards that apply to each designated manufactured/mobile home space as required in Chapter 5.*
4. *For any nonresidential structure which is located immediately adjacent to a single family residential use or district, the lot boundary line minimum distance shall be determined as follows: For every foot building height, the developer shall provide setbacks equal to the height of the building. At no time shall the setback be less than what is indicated in the above table.*

STANDARD	Low Density Residential (LDR)	Medium Density Residential (MDR	Professional Business (PB)	Neighborhood Business (NB)	General Business (GB)	Regional Business (RB)
1. DEVELOPMENT STANDARDS						
A. District/Development Area (min)	n/a	n/a	n/a	n/a	n/a	n/a
B. Development/District Exterior Setback/Buffer	n/a	n/a	n/a	n/a	n/a	n/a
C. Density (max)	1.5 unit/acre	2.5 units/acre	n/a	n/a	n/a	n/a
D. Open Space (min)	10%	20%	n/a	n/a	n/a	n/a
E. Park Space (min)	5%	5%	n/a	n/a	n/a	n/a
2. LOT STANDARDS						
A. Lot Area (min)	29,040 sf	10,000 sf	5,000 sf	n/a	n/a	n/a
B. Lot Width at Front Setback (min)	90 ft Water/Sewer OR 130 ft Septic See Below (5)	70 ft Water/Sewer OR 130 ft Septic See Below (5)	100 ft	100 ft	100 ft	100 ft
C. Pervious Surface (min)	45%	45%	24%	24%	24%	24%
3. PRINCIPAL BUILDING						
A. Principal Front Setback (min)	40 ft	30 ft	10 ft	25 ft	50 ft	50 ft
B. Street Side/Secondary Front Setback (min)	20 ft	15 ft	10 ft	10 ft	15 ft	15 ft
C. Side (from adjacent lot) Setback (min)	20 ft	10 ft	10 ft	10 ft	15 ft	15 ft
D. Rear Setback (min)	25 ft	25 ft	10 ft	10 ft	15 ft	15 ft
E. Other Standards	n/a	n/a	See Below (4)	See Below (4)	See Below (4)	See Below (4)
4. ACCESSORY STRUCTURE						
A. Side Setback	5 ft	5 ft	40 ft	40 ft	50 ft	50 ft
B. Rear Setback	5 ft	5 ft	30 ft	30 ft	30 ft	30 ft
C. Other Standards	See Below (1,3)	See Below (1, 2)	See Below (1, 2)	See Below (1,2)	See Below (1, 2)	See Below (1, 2)
5. PARKING CONFIGURATION						
A. Parking Location per Section 7.2.3	See Chart 7.2	See Chart 7.2		Per building type	Per building type	Per building type
B. Parking in Exterior Setback/Buffer	n/a	n/a	n/a	n/a	n/a	n/a
6. BUILDING HEIGHT						
A. Principal Building (max)	35 ft	35 ft	35 ft	35 ft or 3 stories (whichever is greater)	35 ft or 3 stories (whichever is greater)	50 ft
B. Accessory Structure (max)	2 stories	2 stories	35 ft	35 ft	35 ft	35 ft
C. Additional Height Permitted with Additional Setback	n/a	n/a	n/a	n/a	1 ft additional height permitted with each 2 ft horizontal setback	1 ft additional height permitted with each 2 ft horizontal setback

1. *Accessory structures over 600 sf must comply with principal setback requirement.*
2. *No accessory structures may be located on corner lots between the street and wall line of the principal structure.*
3. *No accessory structures may be located on corner lots between the street and wall line of the principal structure, unless front setback requirements are provided on both streets.*
4. *For any nonresidential structure which is located immediately adjacent to a single family residential use or district, the lot boundary line minimum distance shall be determined as follows: For every foot building height, the developer shall provide setbacks equal to the height of the building. At no time shall the setback be less than what is indicated in the above table.*
5. *Any development/subdivision connected to both public water and sewer shall utilize the alternate dimensional standards given in the table.*

.

STANDARD	Institutional (INS)	Open Space Preservation (OSP)	Light Industrial (LI)	Heavy Industrial (HI)	Mining (M)
1. DEVELOPMENT STANDARDS					
A. District/Development Area (min)	1.5 acres	n/a	2 acres*	6 acres	20 acres
B. Development/District Exterior Setback/Buffer	30 ft setback from adjacent AR, RR, RN, MH, LDR, MDR, HDR, OSP Districts. 10 ft setback from all other adjacent properties and adjacent streets.	n/a	25 ft setback from adjacent RB and GB Districts. 50 ft setback from all other adjacent properties and adjacent streets.	75 ft setback from adjacent RB and GB Districts.150 ft setback from all other adjacent properties and adjacent streets. See Below (4)	75 ft setback from adjacent RB and GB Districts.150 ft setback from all other adjacent properties and adjacent streets. See Below (4)
C. Density (max)	n/a	n/a	n/a	n/a	n/a
D. Open Space (min)	6%	n/a	n/a	n/a	n/a
E. Park Space (min)	n/a	n/a	n/a	n/a	n/a
2. LOT STANDARDS					
A. Lot Area (min)	1.5 acres	n/a	n/a	n/a	n/a
B. Lot Width at Front Setback (min)	100 ft	n/a	n/a	n/a	n/a
C. Pervious Surface (min)	n/a	n/a	n/a	n/a	n/a
3. PRINCIPAL BUILDING					
A. Principal Front Setback (min)	40 ft (3)	n/a	40 ft (3)	50 ft (3)	50 ft (3)
B. Street Side/Secondary Front Setback (min)	35 ft	n/a	35 ft	35 ft	35 ft
C. Side (from adjacent lot) Setback (min)	35 ft	n/a	35 ft	35 ft	35 ft
D. Rear Setback (min)	35 ft	n/a	35 ft	35 ft	35 ft
E. Other Standards	See Below (3)	See Below (3)	See Below (3)	See Below (3)	See Below (3)
4. ACCESSORY STRUCTURE					
A. Side Setback	5 ft	n/a	5 ft	5 ft	5 ft
B. Rear Setback	5 ft	n/a	5 ft	5 ft	5 ft
C. Other Standards	See Below (1, 2)	See Below (1, 2)	See Below (1, 2)	See Below (1, 2)	See Below (1, 2)
5. PARKING CONFIGURATION					
A. Parking Location per Section 9.3	7.2.3		7.2.3	7.2.3	7.2.3
B. Parking in Exterior Setback/Buffer	n/a	n/a	n/a	n/a	n/a
6. BUILDING HEIGHT					
A. Principal Building (max)	50 ft	35 ft	50 ft	50 ft	60 ft
B. Accessory Structure (max)	35 ft	35 ft	35 ft	35 ft	35 ft
C. Additional Height Permitted with Additional Setback	1 ft additional height permitted with each 2 ft horizontal setback		1 ft additional height permitted with each 2 ft horizontal setback	1 ft additional height permitted with each 2 ft horizontal setback	1 ft additional height permitted with each 2 ft horizontal setback

1. *Accessory structures over 600 sf must comply with principal setback requirement.*
2. *No accessory structures may be located on corner lots between the street and wall line of the principal structure.*
3. *For any nonresidential structure which is located immediately adjacent to a single family residential use or district, the lot boundary line minimum distance shall be determined as follows: For every foot building height, the developer shall provide setbacks equal to the height of the building. At no time shall the setback be less than what is indicated in the above table.*
4. *The Development/District Exterior Setback/Buffer shall not apply between adjacent LI and HI districts. A waiver of these requirements may be granted by the Administrator for LI and HI lots existing at the adoption date of this ordinance which do not meet the specified minimum District/Development Area. In such instances the building setback standards for the AR District shall apply. A waiver of these requirements may also be granted by the Administrator in order to permit access to an adjacent railroad right-of-way.*

5. *Subject to approval by the Fire Marshal Office, the height limitations of this ordinance shall not apply to church spires, belfries, cupolas, and domes not intended for human occupancy, monuments, water towers, mechanical penthouses (provided they are set back 20 feet from the front elevation), observation towers, transmission towers, chimneys, smokestacks, tanks, equipment, conveyors, flagpoles, masts, and antennas (provided evidence from appropriate authorities is submitted to the effect that such building or buildings will not interfere with any airport zones or flight patterns). With the exception of water towers, observation towers, transmission towers, and antennas, in no instance shall a non-habitable structure exempted under this section exceed a height of 90-ft or 70-ft when located within 100 feet of a residential use or district. Said height exemption for non-habitable structures shall also apply to the UDO Chapter 3 MX Districts subject to Fire Marshal Office approval. See Section 4.2.1, McWhirter Field Aviation Overlay District, and Chapter 5, Use Regulations, for additional height limitations related to airports zones and communications towers.* (Ord. No. 2019-1608, 11.12.19)

2.5 USES PERMITTED

2.5.1 USE CATEGORIES

All uses permitted in this ordinance have been divided into 10 general categories and are generally defined as follows:

A. **Residential:** Premises available for long-term human habitation by means of ownership and rental, but excluding short-term leasing or rental of less than a month's duration.

B. **Lodging:** Premises available for short-term human habitation, including daily and weekly rental. These are measured in terms of lodging units: a lodging unit is a furnished room of a minimum 200 square feet that includes sanitary facilities and may include limited kitchen facilities.

C. **Office/Service:** Premises available for the transaction of general business and the provision of services, but excluding retail sales and manufacturing, except as a minority component (less than 50% of the gross square footage).

D. **Commercial/Entertainment:** Premises available for the commercial sale of merchandise, prepared foods, and food and drink consumption, but excluding manufacturing.

E. **Civic:** Premises available for organizations dedicated to religion, government, arts and culture, recreation and sports, and other similar areas of public assembly.

F. **Educational/Institutional:** Uses and premises dedicated to education, social service, health care, and other similar functions.

G. **Automotive:** Uses and premises accessed predominately by or dedicated to the sale, maintenance, servicing and/or storage of automobiles or similar vehicles.

H. **Manufacturing/Wholesale/Storage:** Premises available for the creation, assemblage, storage, and repair of items including their wholesale or retail sale.

I. **Agriculture:** Premises for growing crops, raising animals, harvesting timber, and harvesting fish and other animals from a farm, ranch, or their natural habitat and all related functions.

J. **Infrastructure:** Uses and structures dedicated to transportation, communication, and utilities.

2.5.2 INTERPRETATION OF USE MATRICES

A. **Permitted/ Prohibited Uses:** Uses not listed as Permitted (P); Permitted with Review (PR); Permitted with Conditional Use (CU); or requiring a Special Exception (SE) are Prohibited (-) from the applicable zoning district and PR, CU, and SE are defined in Section 5.1.1.

B. **Uses Not Listed:** In the event that a particular use is not listed in the Use Matrix, and such use is not listed as a prohibited use and is not otherwise prohibited by law, the Administrator shall determine whether a materially similar use exists in this chapter. Should the Administrator determine that a materially similar use does exist, the regulations governing that use shall apply to the particular use not listed and the Administrator's decision shall be recorded in writing. Should the Administrator determine that a materially similar use does not exist, this chapter may be amended to establish a specific listing for the use in question through the text amendment process established in Chapter 9 and the use definition added in Chapter 10.

C. **Materially Similar Uses:** The Administrator may determine that a use is materially similar if a permitted use is similarly classified by one or more of the following use classification systems:

1. American Planning Association Land-Based Classification Standards (LBCS)
2. North American Industrial Classification System (NAICS)
3. Institute of Transportation Engineers (ITS) Trip Generation Guide

Section 2.5.3 Use Table (For detailed Use Definitions see Chapter 10.)

USE TYPES	RURAL					TRANSITIONAL						SPECIAL					NEIGHBORHOOD					
A. RESIDENTIAL	AR	RR	RN	RUB	MH	LDR	MDR	PB	NB	GB	RB	INS	OSP	LI	HI	M	UR	HDR	RMX	MX	IMX	REF
Dwelling - Single Family	P	P	P	-	P	P	P	P	-	-	-	-	-	-	-	-	P	-	P	-	-	
Dwelling - Two Family	-	-	-	-	-	-	PR	PR	-	-	-	-	-	-	-	-	-	PR	-	-	-	5.2.1
Dwelling – Three Family, Four Family	-	-	-	-	-	-	-	PR	-	-	-	-	-	-	-	-	-	-	-	-	-	5.2.3
Dwelling - Townhome	-	-	-	-	-	-	-	P	-	-	-	-	-	-	-	-	P	P	P	P	P	
Dwelling - Multifamily	-	-	-	-	-	-	-	-	-	-	PR	-	-	-	-	-	-	PR	PR	PR	-	5.2.2
Dwelling - Accessory	PR	PR	PR	-	-	PR	PR	PR	-	-	-	-	-	-	-	-	PR	PR	-	-	-	5.2.3
Halfway Homes	-	-	-	-	-	-	-	-	-	SE	-	SE	-	-	-	-	-	-	-	-	-	5.2.4
Live-Work Units	-	-	-	PR	-	-	-	PR	PR	-	-	-	-	-	-	-	-	-	PR	PR	PR	5.2.5
Manufactured Housing	PR	PR	-	-	PR	-	-	-	-	-	-	-	-	-	-	-	-	-	-	-	-	5.2.6
Manufactured Home Park	SE	-	-	-	SE	-	-	-	-	-	-	-	-	-	-	-	-	-	-	-	-	5.2.6
Residential/Family Care Home (5 or fewer residents)	P	P	P	-	P	P	P	-	-	-	-	-	-	-	-	-	-	P	P	P	P	
Residential Care Facilities (6 or more residents)	-	-	-	PR	-	-	-	-	PR	PR	PR	PR	-	-	-	-	-	-	-	PR	PR	5.2.7
B. LODGING	AR	RR	RN	RUB	MH	LDR	MDR	PB	NB	GB	RB	INS	OSP	LI	HI	M	UR	HDR	RMX	MX	IMX	REF
Bed and Breakfast Homes (up to 8 rooms)	PR	PR	PR	PR	-	PR	-	PR	PR	-	-	PR	-	-	-	-	PR	PR	-	PR	PR	5.3.1
Bed and Breakfast Inn (up to 12 rooms)	-	-	-	-	-	-	-	-	PR	-	-	PR	-	-	-	-	-	-	-	PR	PR	5.3.1
Boarding or Rooming House	-	-	-	-	-	-	-	-	-	-	-	PR	-	-	-	-	-	-	-	-	-	5.3.2
Campground	SE	SE	-	-	-	-	-	-	-	-	-	-	SE	-	-	-	-	-	-	-	-	5.3.3
Dormitory	-	-	-	-	-	-	-	-	-	-	-	P	-	-	-	-	-	-	-	-	-	
Fraternity/Sorority House	-	-	-	-	-	-	-	-	-	-	-	P	-	-	-	-	-	-	-	-	-	
Hotel/Motel	-	-	-	-	-	-	-	-	-	P	P	P	-	-	-	-	-	-	-	P	P	
C. OFFICE/SERVICE	AR	RR	RN	RUB	MH	LDR	MDR	PB	NB	GB	RB	INS	OSP	LI	HI	M	UR	HDR	RMX	MX	IMX	REF
ATM	-	-	-	P	-	-	-	-	P	P	P	P	-	P	-	-	-	-	-	P	P	
Banks, Credit Unions, Financial Services	-	-	-	P	-	-	-	-	P	P	P	P	-	P	-	-	-	-	-	P	P	
Business Support Services	-	-	-	-	-	-	-	-	P	P	P	P	-	P	-	-	-	-	-	P	P	
Crematoria	-	-	-	-	-	-	-	-	-	-	CU	-	-	CU	-	-	-	-	-	-	-	5.4.1
Dry Cleaning and Laundry Services	-	-	-	-	-	-	-	-	P	P	P	-	-	P	-	-	-	-	-	P	P	
Funeral Homes	-	-	-	P	-	-	-	-	P	P	P	-	-	-	-	-	-	-	-	P	P	
Home Occupation	PR	PR	PR	-	PR	PR	PR	-	-	-	-	-	-	-	-	-	PR	PR	PR	PR	PR	5.4.2
Kennels, Indoor	PR	PR	PR	PR	-	-	-	-	PR	PR	PR	PR	-	PR	-	-	-	-	-	PR	PR	5.4.3
Kennels, Outdoor	PR	PR	CU	PR	-	-	-	-	-	-	CU	CU	-	CU	-	-	-	-	-	-	-	5.4.4
Medical Clinic	-	-	-	PR	-	-	-	PR	PR	PR	PR	-	-	-	-	-	-	-	-	PR	PR	5.4.5

P – Permitted by Right **PR** – Permitted with Review **CU** – Conditional Use Required **SE** – Special Exception Required

Lancaster County Unified Development Ordinance – Use Table

USE TYPES	RURAL					TRANSITIONAL						SPECIAL					NEIGHBORHOOD					
C. OFFICE/SERVICES (CONTINUED)	AR	RR	RN	RUB	MH	LDR	MDR	PB	NB	GB	RB	INS	OSP	LI	HI	M	UR	HDR	RMX	MX	IMX	REF
Personal Services	-	-	-	P	-	-	-	-	P	P	P	P	-	P	-	-	-	-	-	P	P	
Personal Services, Restricted	-	-	-	-	-	-	-	-	-	-	PR	-	-	-	-	-	-	-	-	-	-	5.4.6
Post Office	-	-	-	P	-	-	-	P	P	P	P	P	-	-	-	-	-	-	-	P	P	
Professional Services	-	-	-	P	-	-	-	P	P	P	P	P	-	P	-	-	-	-	-	P	P	
Small Equipment Repair/Rental	-	-	-	P	-	-	-	-	-	P	P	-	-	P	-	-	-	-	-	P	P	
Veterinary Clinic	-	-	-	P	-	-	-	-	P	P	P	-	-	P	-	-	-	-	-	P	P	-

D. COMMERCIAL/ENTERTAINMENT	AR	RR	RN	RUB	MH	LDR	MDR	PB	NB	GB	RB	INS	OSP	LI	HI	M	UR	HDR	RMX	MX	IMX	REF
Alcoholic Beverage Sales Store	-	-	-	P	-	-	-	-	-	P	P	-	-	-	-	-	-	-	-	P	-	
Amusements, Indoor	-	-	-	P	-	-	-	-	-	P	P	-	-	P	-	-	-	-	-	P	P	
Amusements, Outdoor	-	-	-	PR	-	-	-	-	-	-	CU	-	-	CU	-	-	-	-	-	-	-	5.5.1
Bar/Tavern/Brew Pub	-	-	-	CU	-	-	-	-	-	CU	PR	-	-	-	-	-	-	-	-	PR	-	5.5.2
Billiard/Pool Hall	-	-	-	CU	-	-	-	-	-	-	P	-	-	-	-	-	-	-	-	-	-	
Brewery	-	-	-	P	-	-	-	-	-	P	P	-	-	-	-	-	-	-	-	-	P	
Distillery	-	-	-	-	-	-	-	-	-	-	P	-	-	P	-	-	-	-	-	-	-	
Food Truck	-	-	-	-	-	-	-	-	-	PR	PR	PR	-	PR	PR	-	-	-	-	PR	PR	5.5.3
General Commercial	-	-	-	PR	-	-	-	-	PR-	PR	PR	-	-	-	-	-	-	-	-	PR	PR	5.5.4
Night Club	-	-	-	-	-	-	-	-	-	-	PR	-	-	-	-	-	-	-	-	-	-	
Outside Sales	-	-	-	PR	-	-	-	-	PR	PR	PR	PR	-	-	-	-	-	-	-	PR	PR	5.5.5
Outside Sales, Sidewalk Sales	-	-	-	PR	-	-	-	-	PR	PR	PR	PR	-	-	-	-	-	-	-	PR	PR	5.5.6
Pawnshops	-	-	-	PR	-	-	-	-	-	PR	PR	-	-	-	-	-	-	-	-	-	-	5.5.7
Racetrack	-	-	-	-	-	-	-	-	-	-	-	-	-	-	CU	-	-	-	-	-	-	5.5.8
Restaurant	-	-	-	PR	-	-	-	-	CU	PR	PR	PR	-	-	-	-	-	-	-	PR	PR	5.5.9
Riding Stables	P	P	P	P	-	-	-	-	-	-	-	-	P	-	-	-	-	-	-	-	-	
Sexually Oriented Business/Adult Entertainment	-	-	-	-	-	-	-	-	-	-	-	-	-	-	SE	-	-	-	-	-	-	5.5.10
Shooting Range, Indoor	-	-	-	PR	-	-	-	-	-	PR	PR	-	-	PR	PR	-	-	-	-	-	-	5.5.11
Shooting Range, Outdoor	SE	-	-	-	-	-	-	-	-	-	-	-	-	SE	SE	-	-	-	-	-	-	5.5.12
Theater, Indoor Movie or Live Performance	-	-	-	-	-	-	-	-	-	P	P	P	-	-	-	-	-	-	-	P	P	
Theater, Outdoor (Amphitheater)	PR	-	-	PR	-	-	-	-	-	-	PR	PR	PR	-	-	-	-	-	-	PR	PR	5.5.13

P – Permitted by Right **PR** – Permitted with Review **CU** – Conditional Use Required **SE** – Special Exception Required

Lancaster County Unified Development Ordinance – Use Table

USE TYPES	RURAL					TRANSITIONAL						SPECIAL					NEIGHBORHOOD					
E. CIVIC	AR	RR	RN	RUB	MH	LDR	MDR	PB	NB	GB	RB	INS	OSP	LI	HI	M	UR	HDR	RMX	MX	IMX	REF
Cemetery	PR	PR	PR	PR	-	PR	PR	-	PR	PR	PR	PR	-	-	-	-	-	PR	-	-	PR	5.6.1
Conference/Convention Center	-	-	-	-	-	-	-	-	-	P	P	P	-	-	-	-	-	-	-	P	P	
Cultural or Community Facility	-	-	-	P	-	-	-	-	P	P	P	P	-	-	-	-	-	-	-	P	P	
Event Venue/Banquet Hall	P	P	PR	PR	-	PR	PR	PR	PR	PR	PR	PR	-	-	-	-	-	-	-	PR	PR	5.6.2
Places of Assembly	PR	PR	PR	PR	CU	CU	CU	PR	PR	PR	PR	PR	-	PR	-	-	-	CU	-	CU	CU	5.6.3
Private Recreation Facilities	-	-	-	PR	-	-	-	-	PR	PR	PR	PR	-	-	-	-	-	-	-	PR	PR	5.6.4
Public Recreation Facilities	PR	PR	PR	PR	PR	PR	PR	PR	PR	PR	PR	PR	PR	-	-	-	PR	PR	PR	PR	PR	5.6.5
Public Safety Station	P	P	P	P	-	-	-	P	P	P	P	P	-	P	P	-	-	-	-	P	P	
Sports Arena/Stadium (4,000 or more seats)	-	-	-	-	-	-	-	-	-	-	CU	CU	-	CU	-	-		-	-	-	CU	5.6.6
F. EDUCATIONAL/INSTITUTIONAL	AR	RR	RN	RUB	MH	LDR	MDR	PB	NB	GB	RB	INS	OSP	LI	HI	M	UR	HDR	RMX	MX	IMX	REF
Child/Adult Day Care Home (5 or fewer persons)	PR	PR	PR	PR	PR	PR	PR	PR	PR	PR	PR	PR	-	-	-	-	PR	PR	-	PR	PR	5.7.1
Child/Adult Day Care Home (6 or more persons)	-	-	-	-	-	-	-	-	PR	PR	PR	PR	-	-	-	-	-	-	-	PR	PR	5.7.2
College/University	-	-	-	-	-	-	-		-	-	-	P	-	-	-	-	-	-	-	P	P	
Community Support Facility	-	-	-	PR	-	-	-	-	-	PR	PR	PR	-	-	-	-	-	-	-	-	-	5.7.3
Correctional Institution	-	-	-	-	-	-	-	-	-	-	-	CU	-	SE	SE	-	-	-	-	-	-	5.7.4
Day Treatment Center	-	-	-	-	-	-	-	-	-	PR	PR	PR	-	PR	-	-	-	-	-	-	-	5.7.5
Hospital	-	-	-	-	-	-	-	-	-	-	P	P	-	P	-	-	-	-	-	-	-	
Operations, Maint., and Fleet Service Facility	-	-	-	SE	-	-	-	-	-	PR	PR	PR	-	PR	PR	-	-	-	-	-	PR	5.7.6
Schools – Elementary and Secondary	PR	PR	PR	PR	-	PR	CU	CU	CU	CU	CU	PR	-	-	-	-	CU	CU	CU	CU	CU	5.7.7
Schools – Vocational/Technical	-	-	-	P	-	-	-	-	P	P	P	P	-	P	P	-	-	-	-	P	P	
Studio – Art, dance, martial arts, music	P	-	-	P	-	-	-	P	P	P	P	P	-	P	-	-	-	-	-	P	P	
G. AUTOMOTIVE	AR	RR	RN	RUB	MH	LDR	MDR	PB	NB	GB	RB	INS	OSP	LI	HI	M	UR	HDR	RMX	MX	IMX	REF
Drive-Thru/Drive-In Facility	-	-	-	PR	-	-	-	-	CU	PR	PR	-	-	PR	PR	-	-	-	-	PR	PR	5.8.1
Electric Vehicle Charging Stations	PR	PR	PR	PR	PR	PR	PR	PR	PR	PR	PR	PR	PR	PR	PR	PR	PR	PR	PR	PR	PR	5.8.2
Heavy Equipment/Manufactured Home Rental/Sales/Repair	-	-	-	-	-	-	-	-	-	-	SE	-	-	PR	PR	-	-	-	-	-	-	5.8.3
Parking Lot/Structure – Principal Use	-	-	-	-	-	-	-	-	-	PR	PR	PR	-	PR	PR	-	-	-	-	PR	PR	5.8.4
Vehicle Rental/Leasing/Sales	-	-	-	PR	-	-	-	-	-	PR	PR	-	-	-	-	-	-	-	-	CU	CU	5.8.5
Vehicle Services – Minor Maintenance/Repair	-	-	-	P	-	-	-	-	CU	CU	PR	-	-	PR	PR	-	-	-	-	CU	CU	5.8.6
Vehicle Services – Major Repair/Body Work	-	-	-	PR	-	-	-	-	-	CU	PR	-	-	PR	PR	-	-	-	-	-	-	5.8.7

P – Permitted by Right **PR** – Permitted with Review **CU** – Conditional Use Required **SE** – Special Exception Required

Lancaster County Unified Development Ordinance – Use Table

USE TYPES	RURAL					TRANSITIONAL						SPECIAL					NEIGHBORHOOD					
H. INDUSTRY/WHOLESALE/STORAGE	AR	RR	RN	RUB	MH	LDR	MDR	PB	NB	GB	RB	INS	OSP	LI	HI	M	UR	HDR	RMX	MX	IMX	REF
Artist Studio/Light Manufacturing Workshops	-	-	-	P	-	-	-	-	-	P	P	-	-	P	P	-	-	-	-	P	P	
Industry, Light	-	-	-	-	-	-	-	-	-	-	-	-	-	P	P	-	-	-	-	-	-	
Industry, Heavy	-	-	-	-	-	-	-	-	-	-	-	-	-	-	P	-	-	-	-	-	-	
Industry, Restricted	-	-	-	-	-	-	-	-	-	-	-	-	-	-	PR	-	-	-	-	-	-	5.9.1
Junkyard	-	-	-	-	-	-	-	-	-	-	-	-	-	-	SE	-	-	-	-	-	-	5.9.2
Landfill – Class Two	-	-	-	-	-	-	-	-	-	-	-	-	-	SE	SE	-	-	-	-	-	-	5.9.3
Landfill – Class Three	-	-	-	-	-	-	-	-	-	-	-	-	-	-	SE	-	-	-	-	-	-	5.9.4
Mining - Major In-Depth Resource Extraction	-	-	-	-	-	-	-	-	-	-	-	-	-	-	SE	P	-	-	-	-	-	5.9.5/6
Mining - Minor Surface Resource Extraction	PR	PR	PR	PR	-	-	-	-	-	PR	PR	PR	-	PR	PR	P	-	-	PR	PR	PR	5.9.6/7
Private Recycling Collection Stations	-	-	-	-	-	-	-	-	-	-	-	PR	-	PR	PR	-	-	-	-	-	-	5.9.8
Public Recycling and Waste Collection Facilities	-	-	-	PR	-	-	-	-	-	-	-	PR	-	PR	PR	-	-	-	-	-	-	5.9.9
Research and Development Facilities	-	-	-	-	-	-	-	-	-	P	P	-	-	P	P	-	-		-	-	P	
Storage – Outdoor Storage Yard	-	-	-	-	-	-	-	-	-	PR	PR	-	-	PR	PR	-	-	-	-	-	-	5.9.10
Storage – Self Service (Mini)	-	-	-	-	-	-	-	-	-	PR	PR	-	-	PR	PR	-	-	-	-	-	-	5.9.11
Storage – Warehouse Indoor	-	-	-	-	-	-	-	-	-	CU	PR	-	-	PR	PR	-	-	-	-	-	PR	5.9.12
Storage – Warehouse Indoor, Restricted	-	-	-	-	-	-	-	-	-	-	-	-	-	PR	PR	-	-	-	-	-	-	5.9.13
Wholesaling and Distribution	-	-	-	-	-	-	-	-	-	-	PR	-	-	P	P	-	-	-	-	-	P	5.9.14
Wholesaling and Distribution, Restricted	-	-	-	-	-	-	-	-	-	-	-	-	-	PR	PR	-	-	-	-	-	-	5.9.15

I. AGRICULTURE	AR	RR	RN	RUB	MH	LDR	MDR	PB	NB	GB	RB	INS	OSP	LI	HI	M	UR	HDR	RMX	MX	IMX	REF
Agriculture and Crop Production/Harvesting	P	P	P	P	-	-	-	-	-	-	-	P	P	P	P	-	-	-	-	-	-	
Agricultural Support Services/Nurseries	P	P	P	P	-	-	-	-	P	P	P	-	-	P	P	-	-	-	-	-	P	
Agritourism	P	P	P	P	-	-	-	-	-	-	-	-	-	-	-	-	-	-	-	-	-	
Animal Production/General Farms	PR	PR	PR	PR	-	PR	-	-	-	-	-	-	-	-	-	-	-	-	-	-	-	5.10.1
Animal Production Facilities, Non-Swine	PR	-	-	-	-	-	-	-	-	-	-	-	-	-	-	-	-	-	-	-	-	5.10.2
Animal Production Facilities, Swine	SE	-	-	-	-	-	-	-	-	-	-	-	-	-	-	-	-	-	-	-	-	5.10.3
Apiculture (Bee Keeping)	P	P	P	P	-	P	-	-	P	-	-	P	P	-	-	-	-	-	-	-	P	
Backyard Pens/Coops	P	P	P	P	-	P	PR	PR	-	-	-	PR	-	-	-	-	-	-	-	-	PR	5.10.4

P – Permitted by Right **PR** – Permitted with Review **CU** – Conditional Use Required **SE** – Special Exception Required

Lancaster County Unified Development Ordinance – Use Table

USE TYPES	RURAL					TRANSITIONAL						SPECIAL					NEIGHBORHOOD					
I. AGRICULTURE (CONTINUED)	AR	RR	RN	RUB	MH	LDR	MDR	PB	NB	GB	RB	INS	OSP	LI	HI	M	UR	HDR	RMX	MX	IMX	REF
Commercial Stables	P	P	P	P	-	-	-	-	P	P	P	-	-		-	-	-	-	-	-	-	
Ecotourism	P	P	P	P	-	-	-	-	-	-	-	-	-	-	-	-	-	-	-	-	-	
Farmer's Markets and Roadside Stands	PR	PR	PR	PR	PR	PR	PR	PR	PR	PR	PR	PR	PR	PR	PR	PR	PR	PR	PR	PR	PR	
Forestry	P	P	P	P	-	P	-	-	-	P	P	P	P	P	P	P	-	-	-	-	-	
Gardens (Community and Private)	P	P	P	P	P	P	P	P	P	P	P	P	P	P	P	P	-	P	P	P	P	
Wineries	PR	PR	PR	PR	-	-	-	-	-	-	-	-	-	-	-	-	-	-	-	-	-	

J. INFRASTRUCTURE	AR	RR	RN	RUB	MH	LDR	MDR	PB	NB	GB	RB	INS	OSP	LI	HI	M	UR	HDR	RMX	MX	IMX	REF
Airstrip/Airport	-	-	-	-	-	-	-	-	-	-	-	PR	-	-	PR	-	-	-	-	-	-	5.11.1
Geothermal Energy Systems	PR	PR	PR	PR	PR	PR	PR	PR	PR	PR	PR	PR	PR	PR	PR	PR	PR	PR	PR	PR	PR	5.11.2
Solar Energy Systems	PR	PR	PR	PR	PR	PR	PR	PR	PR	PR	PR	PR	PR	PR	PR	PR	PR	PR	PR	PR	PR	5.11.3
Solar Farms	CU	-	-	-	-	-	-	-	-	-	-	-	-	-	-	-	-	-	-	-	-	5.11.4
Utilities – Class 1	P	P	P	P	P	P	P	P	P	P	P	P	P	P	P	P	P	P	P	P	P	
Utilities – Class 2	P	P	P	P	P	P	P	P	P	P	P	P	P	P	P	P	P	P	P	P	P	
Utilities – Class 3	P	P	-	-	-	-	-	-		-	-	PR	-	P	P	-	-	-	-	-	-	5.11.6
Wireless Communication Facility (Concealed)	PR	PR	PR	PR	PR	PR	PR	PR	PR	PR	PR	PR	-	PR	PR	PR	PR	PR	PR	PR	PR	5.11.5
Wireless Communication Facility (Up to 60.00')	PR	PR	PR	PR	PR	PR	PR	PR	PR	PR	PR	PR	-	PR	PR	PR	PR	PR	PR	PR	PR	5.11.5
Wireless Communication Facility (60.01'to 199.99')	SE	SE	SE	SE	SE	SE	SE	PR	PR	PR	PR	PR	-	PR	PR	PR	SE	SE	SE	SE	SE	5.11.5
Wireless Communication Facility (200' and Over)	-	-	-	-	-	-	-	-	-	-	-	-	-	SE	SE	SE	-	-	-	-	-	5.11.5

K. OTHER	AR	RR	RN	RUB	MH	LDR	MDR	PB	NB	GB	RB	INS	OSP	LI	HI	M	UR	HDR	RMX	MX	IMX	REF
Temporary Uses	PR	PR	PR	PR	PR	PR	PR	PR	PR	PR	PR	PR	PR	PR	PR	PR	PR	PR	PR	PR	PR	5.12

P – Permitted by Right **PR** – Permitted with Review **CU** – Conditional Use Required **SE** – Special Exception Required

(Ord. No. 2017-1468, 9.25.17; Ord. No. 2018-1492, 2.12.18; Ord. No. 2018-1494, 3.12.18; Ord. No. 2018-1519, 7.16.18; Ord No. 2019-1607, 10.14.19; Ord No. 2019-1620, 12.9.19; Ord No. 2019-1634, 1.27.20; Ord No. 2020-1645, 2.24.20)

3 MIXED-USE DISTRICTS

3.1 INTENT

For the purposes of this ordinance, the standards and provisions for mixed-use districts are designed to create walkable, mixed-use environments whereas the rural, transitional, or special districts are more reflective of the existing, primarily automobile-dependent configuration. The mixed-use base districts that are reflected in this chapter include the dimensional standards and permitted building types.

3.2 MIXED-USE DISTRICTS

The mixed-use districts included in this chapter have urban streets with curbs and gutters with regularly placed street trees, sidewalks, and building forms that are more regular in form and spacing. These districts are also referred to as "form-based districts" because each has detailed provisions for the mix of uses, building type and design, density, height, street design, the design of parks and open space, parking, and other aspects of the urban form of the human environment. Images that reflect Lancaster County's mixed-use form-based districts are as follows:

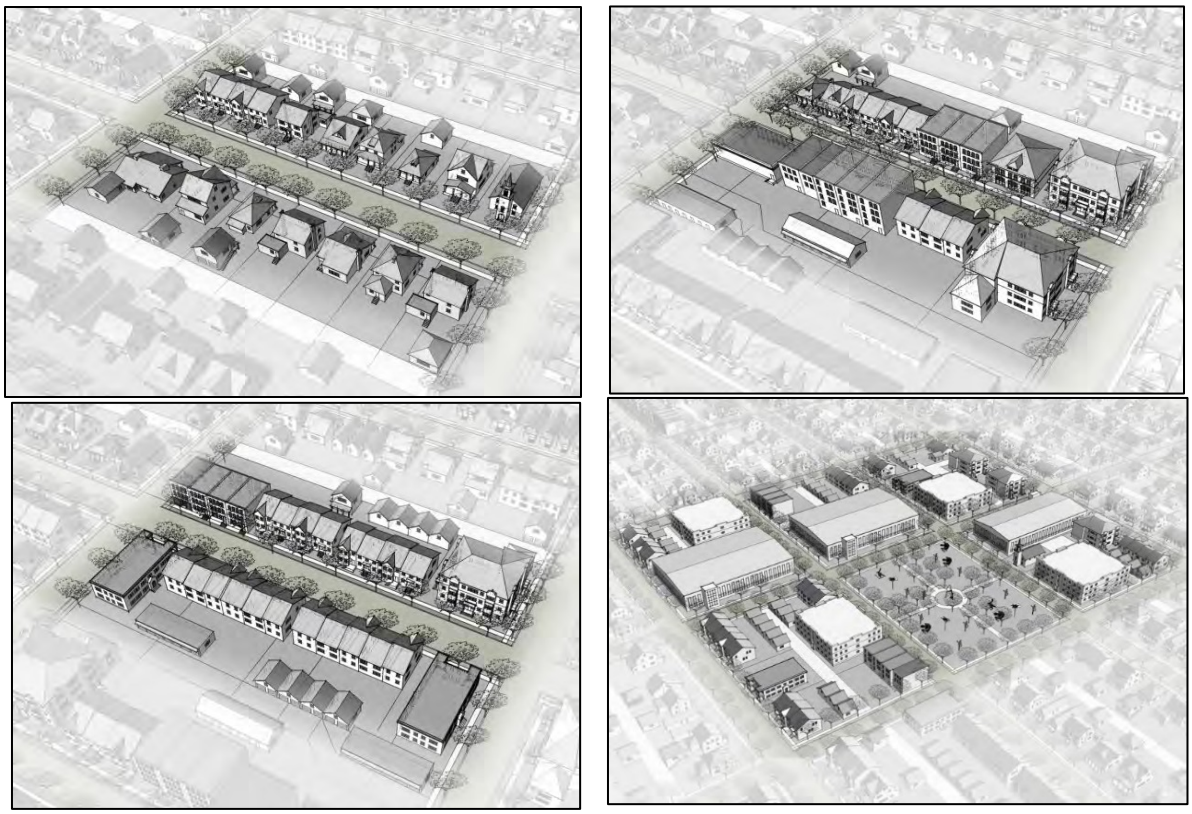

Source: City of Wilson, NC

3.3 BUILDING TYPES ESTABLISHED

This section establishes and defines each building type to ensure that proposed development is consistent with the district goals for building form, physical character, land use, and quality.

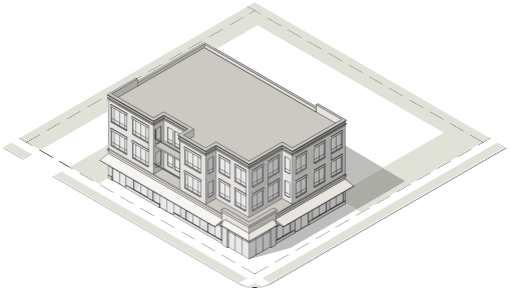

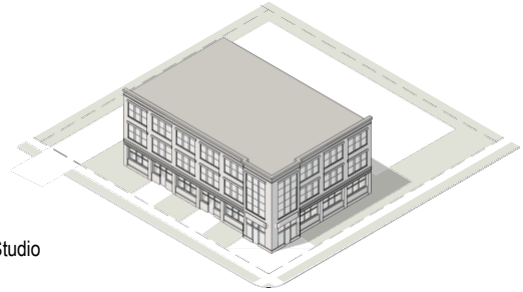

Source: Code Studio

A. Mixed Use Building

A multi-story building type that typically includes ground floor retail uses with upper-story residential or commercial use. Not intended for ground floor residential use.

B. General Building

A building type that typically accommodates commercial uses. Not intended for retail or residential use.

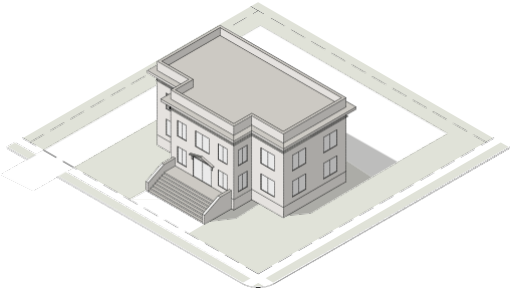

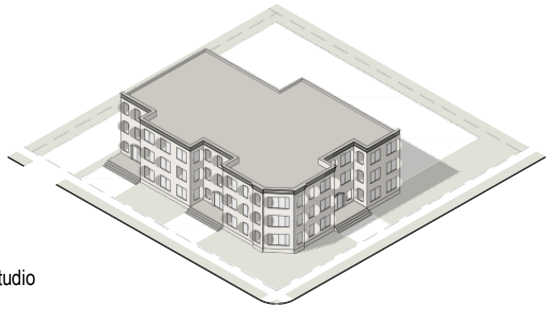

Source: Code Studio

C. Civic Building

A building type that accommodates specifically identified civic uses (see Section 3.6,. Civic Building). Not intended for retail, commercial, or residential uses

D. Apartment Building

A building type that accommodates 12 or more attached dwelling units vertically and horizontally integrated. Not intended for non-residential use.

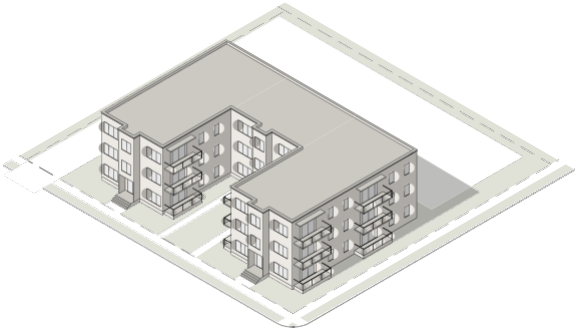

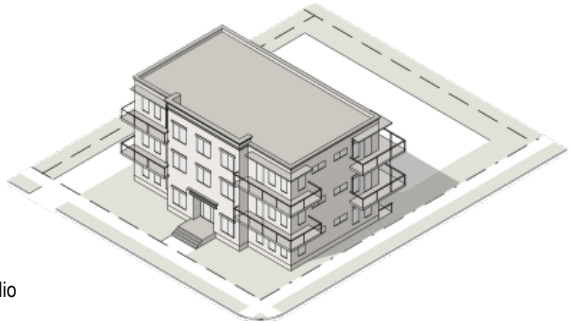

Source: Code Studio

E. Apartment Court

A building type that accommodates 12 or more attached dwelling units vertically and horizontally integrated and organized around a courtyard that fronts a primary street. Not intended for non-residential use.

F. Garden Apartment

A building type that accommodates 3 to 12 attached dwelling units vertically and horizontally integrated. Not intended for non-residential use.

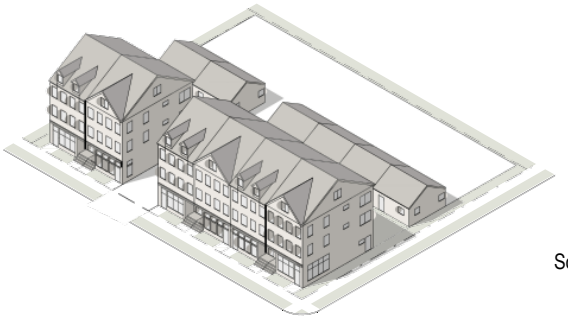

Source: Code Studio

G. Stacked Flat

A multi-story building type that accommodates side-by-side attached units where units can be used for both non-residential and residential use. Ground floor units can be separated from upper-story units or units can be internally connected.

H. Townhouse

A building type that accommodates 3 or more dwelling units where each unit is separated vertically by a common side wall. Units cannot be vertically mixed. Not intended for non-residential uses.

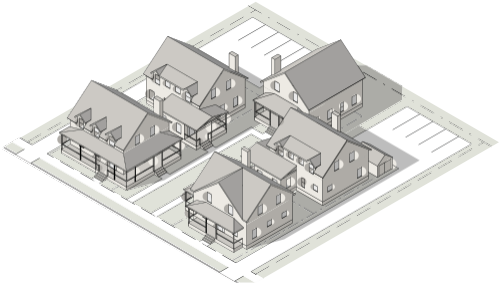

Source: Code Studio

I. Cottage Court

A development building type with 5 to 9 detached houses and organized around a common courtyard that fronts a primary street. Not intended for non-residential uses.

.

J. Detached House

A building type that accommodates one dwelling unit on an individual lot with yards on all sides and may include a rear accessory dwelling unit at grade or above a garage (carriage house). Not intended for non-residential uses.

3.4 BUILDING TYPES ALLOWED BY DISTRICT

Building types are allowed by district as set forth below:

BUILDING TYPE	Urban Residential (UR)	High Density Residential (HDR)	Residential Mixed-Use (RMX)	Mixed-Use (MX)	Industrial Mixed-Use (IMX)
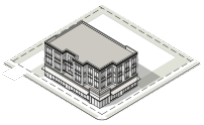 Mixed-Use Building				P	P
General Building				P	P
Civic Building	P	P	P	P	P
Apartment Building		P		P	P
Apartment Court		P		P	P
Garden Apartment		P	P	P	P
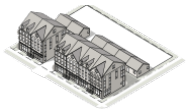 Stacked Flat			P	P	
Townhouse	P	P	P	P	P
Cottage Court	P		P		
Detached House	P		P		

Key: P = Permitted Blank Cell = Not Permitted

* In RMX, a stacked flat is only allowed on a lot located at the intersection of streets.

3.5 URBAN DISTRICT DEVELOPMENT STANDARDS

Base Districts	Urban Residential UR	High Density Residential HDR	Residential Mixed-Use RMX	Mixed-Use MX	Industrial Mixed-use IMX
1. BUILDING TYPE	Section 3.4	Section 3.4	Section 3.4	Section 3.4	Section 3.4
2. PERMITTED BUILDING ELEMENTS	Section 3.6	Section 3.6	Section 3.6	Section 3.6	Section 3.6
3. DEVELOPMENT STANDARDS					
A. Max. Density (Units/Acre)	4 dua	8 dua	Attached - 12 dua * Detached – 9 dua	15 dua * and **	12 dua
B. Minimum Development Size	25 acres***	25 acres***	25 acres***	25 acres***	25 acres***
4. BUILDING PLACEMENT	Section 3.6	Section 3.6	Section 3.6	Section 3.6	Section 3.6
5. ACCESSORY STRUCTURE	Section 3.6	Section 3.6	Section 3.6	Section 3.6	Section 3.6
6. PARKING CONFIGURATION	By building type – See Chapter 7	By building type - See Chapter 7	By building type – See Chapter 7	By building type – See Chapter 7	By building type – See Chapter 7
7. HEIGHT					
A. Min. Height	Section 3.6	Section 3.6	Section 3.6	Section 3.6	Section 3.6
B. Max. Height	Section 3.6	Section 3.6	Section 3.6	Section 3.6	Section 3.6

*A density bonus of up to 15% may be considered by the Planning Commission and County Council when the development provides 10% of the total housing units for affordability and housing diversity. This may be achieved through smaller square footage units being incorporated into the Master Development Plan for families with moderate incomes of at least 50% but less than 80% of median incomes for the Charlotte –Gastonia-Salisbury Combined Statistical Area.

**Additional density may be considered during the Mixed-Use District / Master Development Plan process by the Planning Commission and County Council.

***For existing properties zoned with a mixed-use designation prior to the adoption of the minimum mixed-use development size standards and without a previously approved mixed-use master plan, a 20% reduction in the minimum mixed-use development size may be requested as a matter of right. (Ord. No. 2019-1600, 9.9.19)

Development Agreements shall be required for all mixed-use zoning district rezoning applications, as consistent with Section 9.2.18 of this UDO. (Ord. No. 2019-1600, 9.9.19)

For the purposes of this ordinance, the standards and provisions for mixed-use districts including UR, HDR, RMX, MX, and IMX require the development and approval of a Mixed-Use District / Master Development Plan in accordance with Chapter 9. Such plans must be approved prior to the issuance of any other land development permits except for a preliminary or final plats necessary to subdivide the development to provide access to the tract.

3.6 BUILDING TYPE DEVELOPMENT STANDARDS

3.6.1 MIXED USE BUIDING

A. LOT

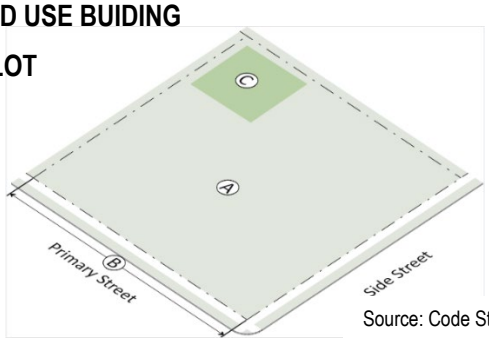

Source: Code Studio

B. PLACEMENT

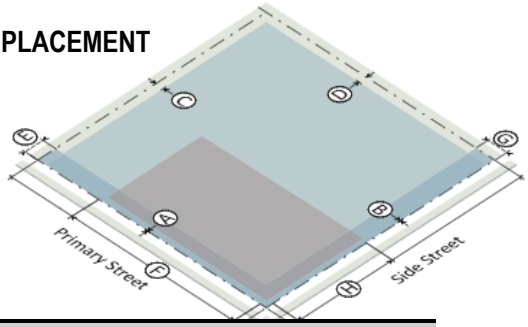

Lot Dimensions		
A	Lot area (min)	5,000 SF
B	Lot width (min)	50’
Lot Parameters		
C	% of outdoor amenity space (min)	10%

Building Setbacks		
A	Primary street (min)	0’
B	Side street (min)	0’
C	Side interior (min)	0’ or 5’
C	Side interior, abutting protected district, RMX or UR (min)	10’
D	Rear (min)	0’ or 5’
D	Rear, abutting protected district, RMX or UR	20’
D	Abutting alley (min)	5’
Build-to Zone (BTZ)		
E	Primary street (min/max)	0’ to 10’
F	Building in primary street BTZ (min % of lot width)	70%
G	Side street (min/max)	0’ to 10’
H	Building in side street BTZ (min % of lot width)	35%
Parking Location		
I	On-site parking not allowed between the building and the street.	

C. Height

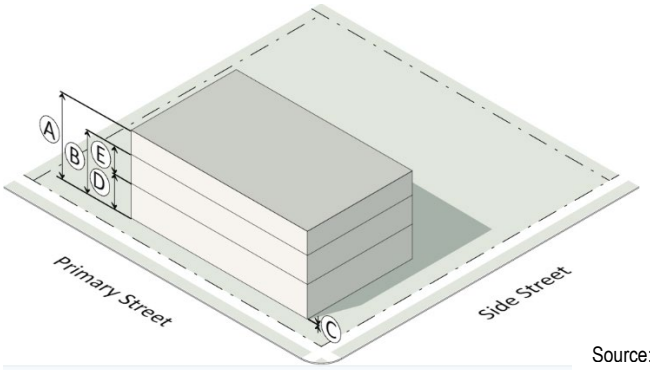

D. Activation

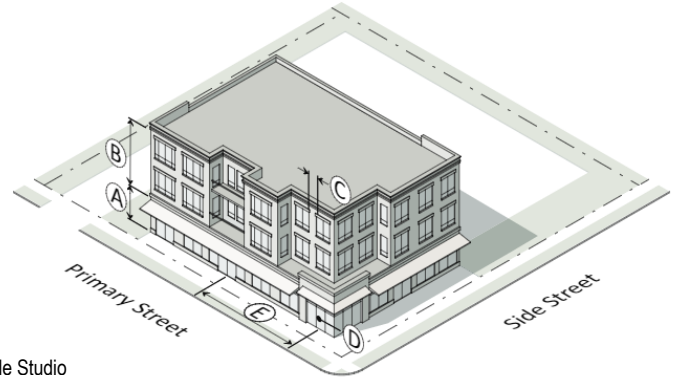

Source: Code Studio

	Building Height	
A	Building height (max)	
	RMX, MX, IMX	3 stories/45’
	MX, IMX	4 stories/55’
	MX, IMX	5 stories/67’
	Reduced height may be required when abutting a protected district (see Section 3.7.J)	
B	Building height (min)	2 stories
	Story Height	
C	Ground floor elevation	0’
D	Ground story height, floor to ceiling (min)	13’
E	Upper story height, floor to ceiling (min)	9’

	Transparency	
A	Ground story (min)	60%
B	Upper story (min)	20%
C	Blank wall area (max)	30’
	The street-fronting, street-level window pane surface area must allow views into the ground story use for a depth of at least 8 feet.	
	Pedestrian Access	
D	Entrance facing primary street	Required
E	Entrance spacing along primary street (max)	75’
	Permitted Building Elements	
	Porch	No
	Stoop	No
	Balcony	Yes
	Gallery	Yes
	Awning/Canopy	Yes
	Forecourt	Yes

3.6.2 GENERAL BUILDING

A. LOT

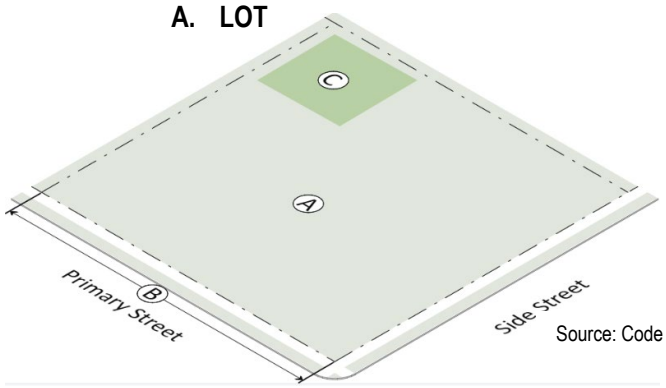

Source: Code Studio

B. PLACEMENT

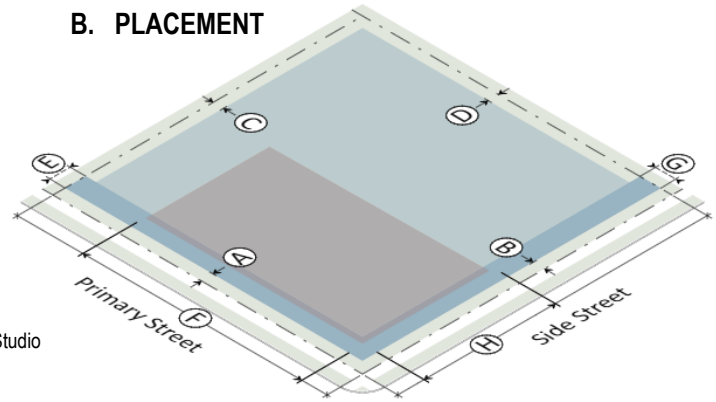

Lot Dimensions		
A	Lot area (min)	5,000 SF
B	Lot width (min)	50’
Lot Parameters		
C	% of outdoor amenity space (min)	10%

Building Setbacks		
A	Primary street (min)	5’
B	Side street (min)	5’
C	Side interior (min)	0’ or 5’
C	Side interior, abutting protected district, RMX or UR (min)	10’
D	Rear (min)	0’ or 5’
D	Rear, abutting protected district, RMX or UR (min)	20’
D	Abutting alley (min)	5’
Build-to Zone (BTZ)		
E	Primary street (min/max)	5’ to 20’
F	Building in primary street BTZ (min % of lot width)	70%
G	Side street (min/max)	5’ to 20’
H	Building in side street BTZ (min % of lot width)	35%
Parking Location		
	On-site parking not allowed between the building and the street.	

C. HEIGHT

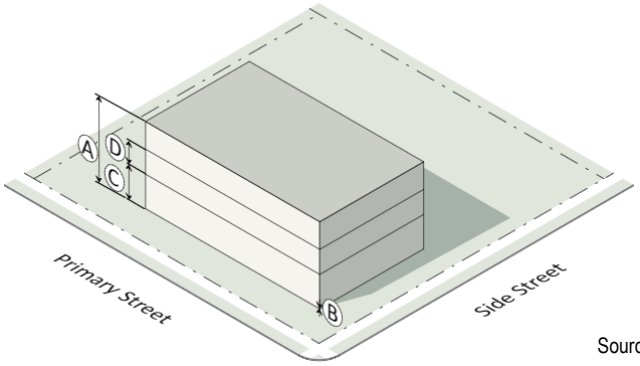

D. ACTIVATION

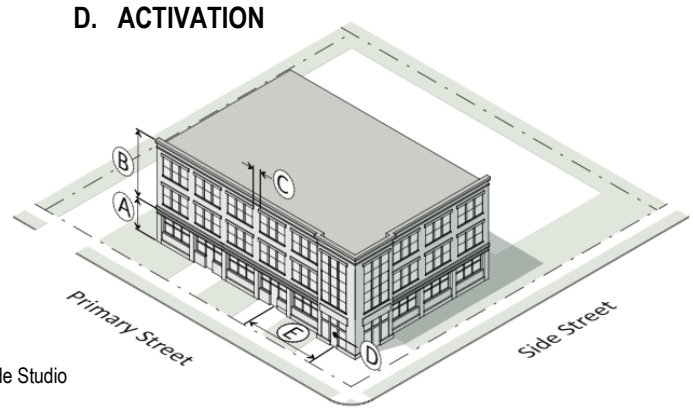

Source: Code Studio

Building Height		
A	Building height (max)	
	MX, IMX	2 stories/35’
	MX, IMX	3 stories/45’
	MX, IMX	4 stories/60’
	Reduced height may be required when abutting a protected district (see Section 3.7.J)	
Story Height		
B	Ground floor elevation	0’
C	Ground story height, floor to ceiling (min)	11’
D	Upper story height, floor to ceiling (min)	9’

Transparency		
A	Ground story (min)	40%
B	Upper story (min)	20%
C	Blank wall area (max)	35’
Pedestrian Access		
D	Entrance facing primary street	Required
E	Entrance spacing along primary street (max)	100’
Permitted Building Elements		
	Porch	No
	Stoop	No
	Balcony	Yes
	Gallery	Yes
	Awning/Canopy	Yes
	Forecourt	Yes

3.6.3 CIVIC BUILDING

A. LOT

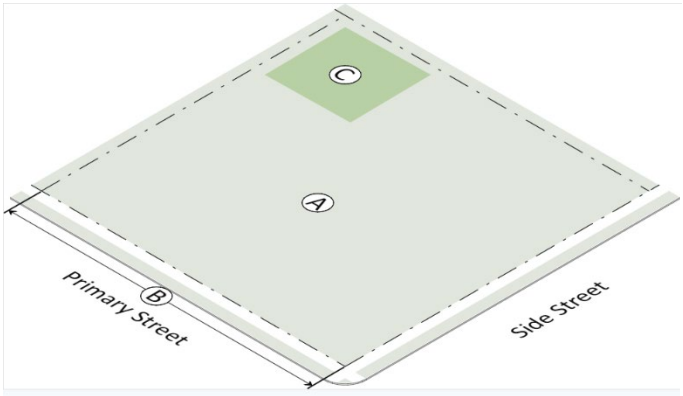

B. PLACEMENT

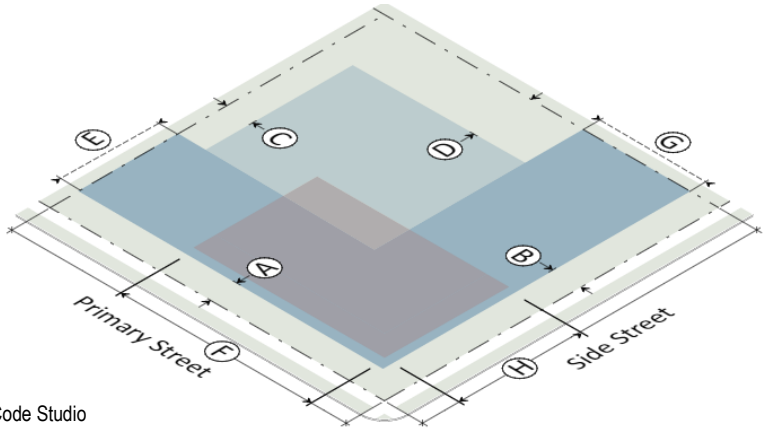

Source: Code Studio

Lot Dimensions		
A	Lot area (min)	5,000 SF
B	Lot width (min)	50’
Lot Parameters		
C	% of outdoor amenity space (min)	10%

Building Setbacks		
A	Primary street (min)	10’
B	Side street (min)	10’
C	Side interior (min)	10’
D	Rear (min)	20’
D	Abutting alley (min)	5’
Build-to Zone (BTZ)		
E	Primary street (min/max)	10’ to 40’
F	Building in primary street BTZ (min % of lot width)	40%
G	Side street	10’ to 40’
H	Building in side street BTZ (min % of lot width)	20%
Parking Location		
I	On-site parking not allowed between the building and the street.	

C. HEIGHT

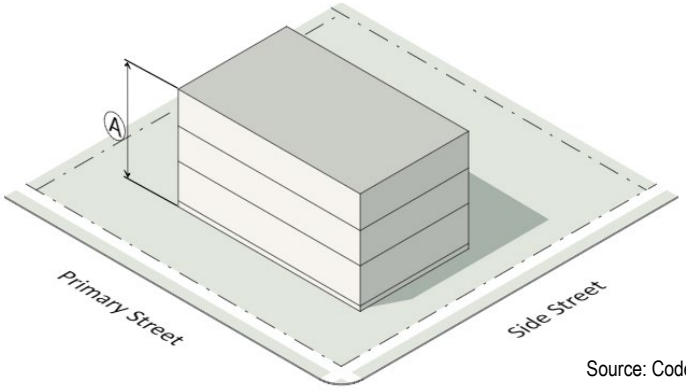

D. ACTIVATION

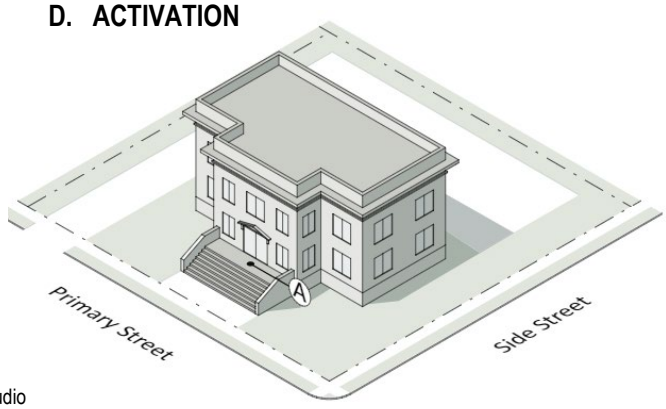

Source: Code Studio

	Building Height	
A	Building height (max)	
	UR	2 stories/35'
	RMX, MX, IMX	3 stories/45'
	MX, IMX	4 stories/55'
	Reduced height may be required when abutting a protected district (see Section 3.7.J)	

	Pedestrian Access	
A	Entrance facing primary street	Required
	Allowed Building Elements	
	Porch	Yes
	Stoop	Yes
	Balcony	Yes
	Gallery	Yes
	Awning/Canopy	Yes
	Forecourt	Yes

Uses Allowed in a Civic Building Type

Only the following uses are allowed in a civic building type (see Section 2.5.3, Permitted Use Table):

- College, university.
- Museum, library.
- Places of assembly.
- School (K-12).

3.6.4 APARTMENT BUILDING

A. LOT

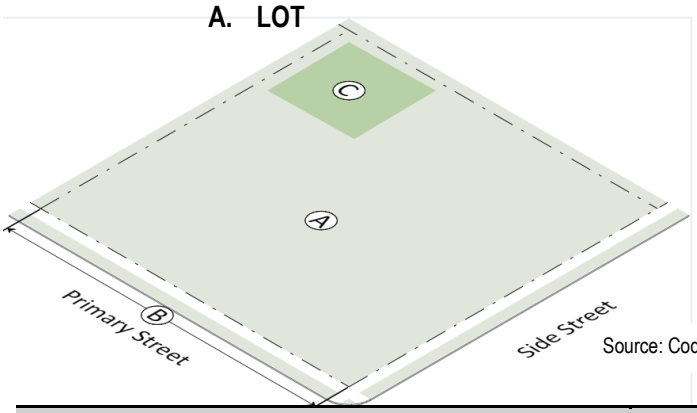

Source: Code Studio

B. PLACEMENT

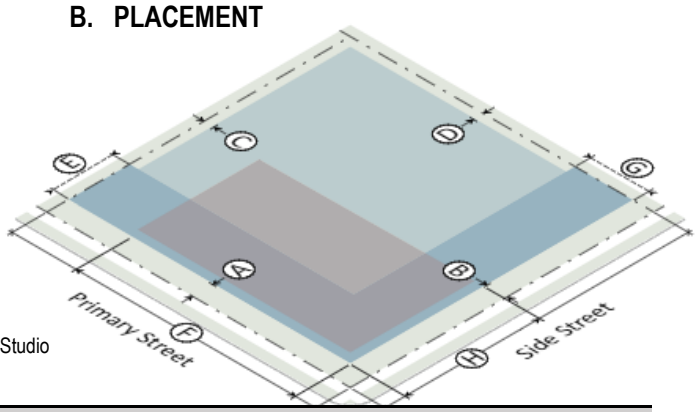

Lot Dimensions		
A	Lot area (min)	12,5000 SF
B	Lot width (min)	100’
Lot Parameters		
C	% of outdoor amenity space (min)	10%

Building Setbacks		
A	Primary street (min)	10’
B	Side street (min)	10’
C	Side interior (min)	0’ to 5’
C	Side interior, abutting protected district, RMX or UR (min)	10’
D	Rear (min)	0’ to 5’
D	Rear, abutting protected district, RMX or UR (min)	20’
D	Abutting alley (min)	5’
Build-to Zone (BTZ)		
E	Primary street (min/max)	10’ to 20’
F	Building in primary street BTZ (min % of lot width)	70%
G	Side street (min/max)	10’ to 20’
H	Building in side street BTZ (min % of lot width)	35%
Parking Location		
I	On-site parking not allowed between the building and the street.	

C. HEIGHT

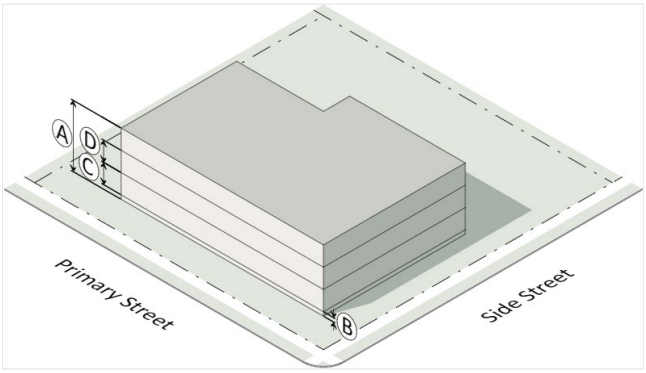

D. ACTIVATION

Source: Code Studio

Building Height		
A	Building height (max)	
	MX, IMX	2 stories/35’
	MX, IMX	3 stories/45’
	MX, IMX	4 stories/55’
	Reduced height may be required when abutting a protected district (see Section 3.7.J)	
Story Height		
B	Ground floor elevation	2’
C	Ground story height, floor to ceiling (min)	10’
D	Upper story height, floor to ceiling (min)	9’

Transparency		
A	Ground story (min)	20%
B	Upper story (min)	20%
C	Blank wall area (max)	35’
Pedestrian Access		
D	Entrance facing primary street	Required
E	Entrance spacing along primary street (max)	100’
Permitted Building Elements		
	Porch	Allowed
	Stoop	Allowed
	Balcony	Allowed
	Gallery	Not Allowed
	Awning/Canopy	Allowed
	Forecourt	Allowed

3.6.5 APARTMENT COURT

A. LOT

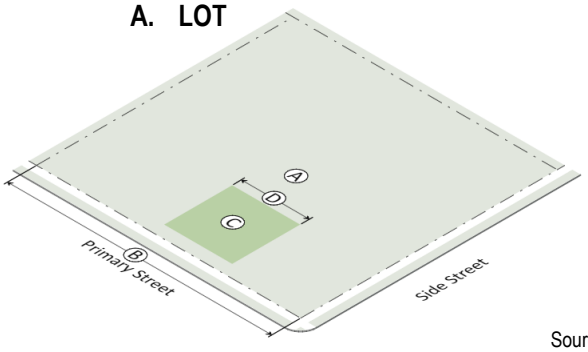

B. PLACEMENT

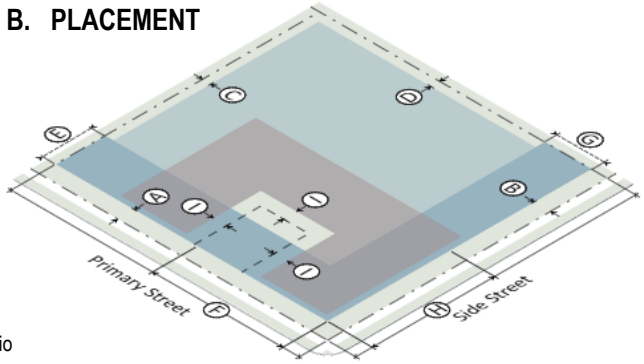

Source: Code Studio

Lot Dimensions		
A	Lot area (min)	30,000 SF
B	Lot width (min)	150’
Courtyard Dimensions		
C	Area (min)	2,000 SF
C	% of outdoor amenity space (min)	10%
D	Width (min)	45’

Area devoted to courtyard counted toward outdoor amenity space.

Building Setbacks		
A	Primary street (min)	10’
B	Side street (min)	10’
C	Side interior (min)	0’ or 5’
C	Side interior, abutting protected district, RMX or UR (min)	10’
D	Rear (min)	0’ or 5’
D	Rear, abutting protected district, RMX or UR (min)	20’
D	Abutting alley (min)	5’
Build-to Zone (BTZ)		
E	Primary street (min/max)	10’ to 20’
F	Building in primary street BTZ (min % of lot width”	40%
G	Side street (min/max)	10’ to 20’
H	Building in side street BTZ (min % of lot width	40%
Courtyard Encroachment		
I	Porch including steps (max)	8’
I	Balcony (max)	6’
Parking Location		
J	On-site parking not allowed between the building and the street.	

C. HEIGHT

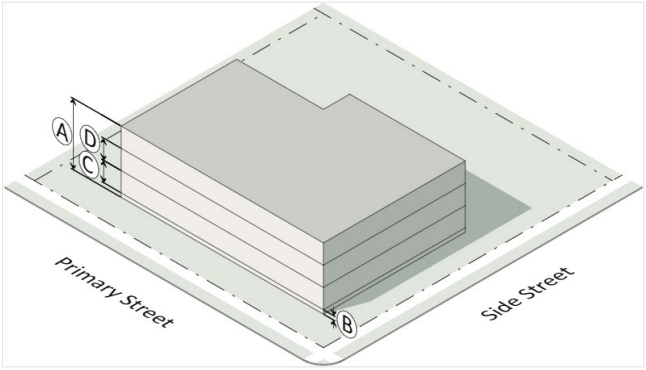

D. ACTIVATION

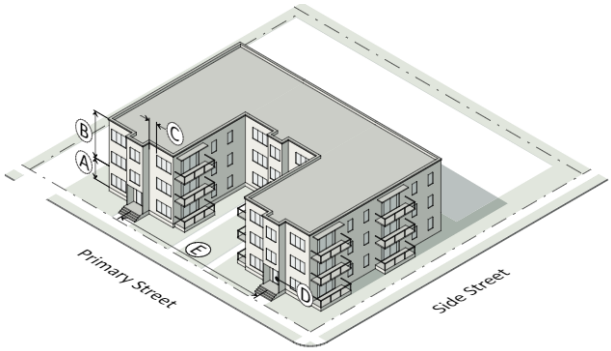

Source: Code Studio

Building Height		
A	Building height (max)	
	MX, IMX	2 stories/35’
	MX, IMX	3 stories/45’
	MX, IMX	4 stories/55’
	Reduced height may be required when abutting a protected district (see Section 3.7.J)	
Story Height		
B	Ground floor elevation	2’
C	Ground story height, floor to ceiling (min)	10’
D	Upper story height, floor to ceiling (min)	9’

Transparency		
A	Ground story (min)	20%
B	Upper story (min)	20%
C	Blank wall area (max)	35’
Pedestrian Access		
D	Entrance facing primary street	Required
E	Entrance spacing along primary street (max)	100’
Permitted Building Elements		
	Porch	Allowed
	Stoop	Allowed
	Balcony	Allowed
	Gallery	Not Allowed
	Awning/Canopy	Allowed
	Forecourt	Not Allowed

3.6.6 GARDEN APARTMENT

A. LOT

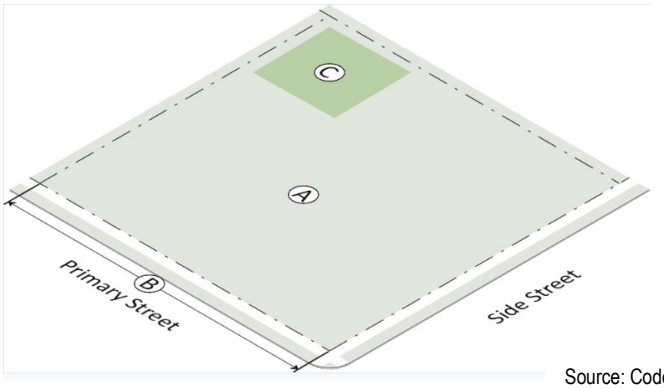

B. PLACEMENT

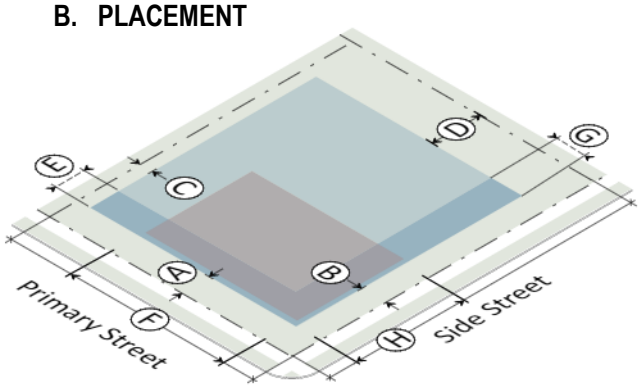

Source: Code Studio

Lot Dimensions		
A	Lot area (min)	12,500 SF
B	Lot width (min)	100’
Lot Parameters		
C	% of outdoor amenity space (min)	10%
D	Dwelling units per building (max)	12

Building Setbacks		
A	Primary street (min)	10’
B	Side street (min)	10’
C	Side interior (min)	5’
C	Side interior, abutting protected district or UR (min)	10’
D	Rear (min)	20’
D	Abutting alley (min)	5’
Build-to Zone (BTZ)		
E	Primary street (min/max)	10’ to 20’
F	Building in primary street BTZ (min % of lot width)	70%
G	Side street	10’ to 20’
H	Building in side street BTZ (min % of lot width)	35%
Parking Location		
I	On-site parking not allowed between the building and the street.	

C. HEIGHT

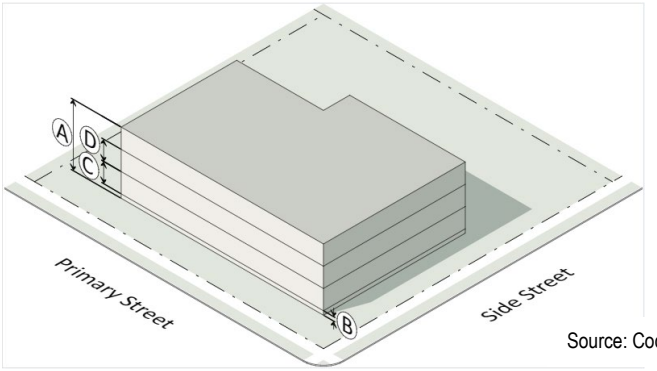

Source: Code Studio

Building Height		
A	Building height (max)	
	RMX	2 stories/35’
	RMX, MX, IMX	3 stories/45’
	Reduced height may be required when abutting a protected district (see Section 3.7.J)	
Story Height		
B	Ground floor elevation (min)	2’
C	Ground story height, floor to ceiling (min)	10’
D	Upper story height, floor to ceiling (min)	9’

D. ACTIVATION

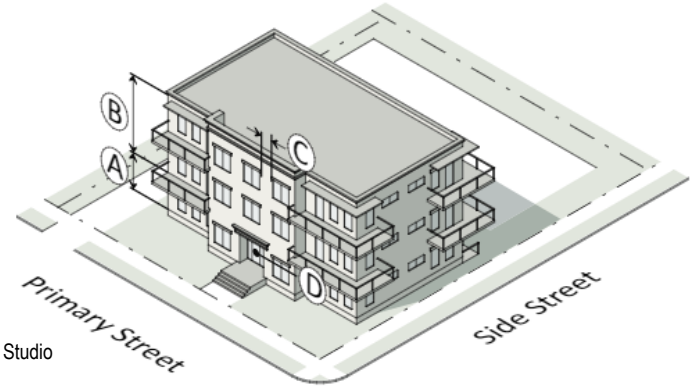

Transparency		
A	Ground story (min)	20%
B	Upper story (min)	20%
C	Blank wall area (max)	35’
Pedestrian Access		
D	Entrance facing primary street	Required
E	Entrance spacing along primary street	100’
Building Elements		
	Porch	Allowed
	Stoop	Allowed
	Balcony	Allowed
	Gallery	Not Allowed
	Awning/Canopy	Allowed
	Forecourt	Allowed

3.6.7 STACKED FLAT

A. LOT

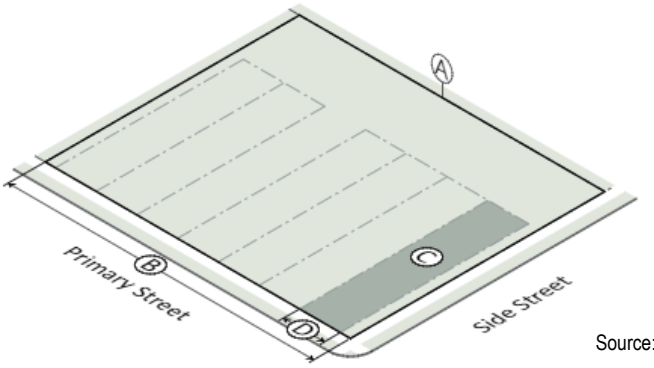

B. PLACEMENT

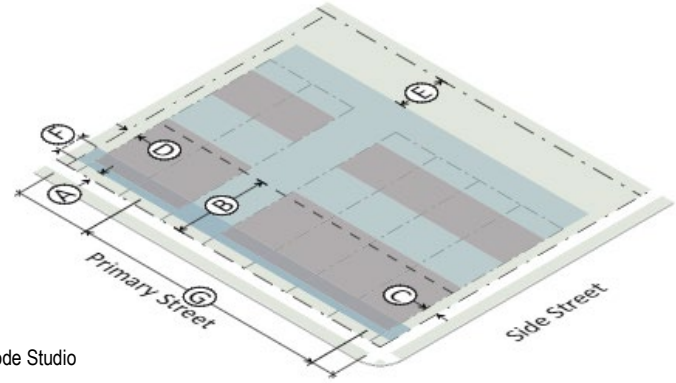

Source: Code Studio

Site Dimensions		
A	Site area (min)	12,500 SF
B	Site width (min)	100’
Lot Dimensions		
C	Lot area (min)	1,300 SF
D	Unit width (min/max)	20’ to 30’

Building Setbacks		
A	Primary street - principal buliding (min)	5’
B	Primary street - accessory structures (min)	40’
C	Side street (min)	5’
D	Side interior, end unit only (min)	5’
D	Side interior, abutting protected district, RMX or UR (min)	10’
E	Rear (min)	20’
E	Abutting alley	4’ or 20’ min
Build-to Zone (BTZ)		
F	Primary street (min/max)	5’ to 10’
G	Building in primary street BTZ (min % lot width)	70%
Parking Location		
H	On-site parking not allowed between the building and the street.	

C. HEIGHT

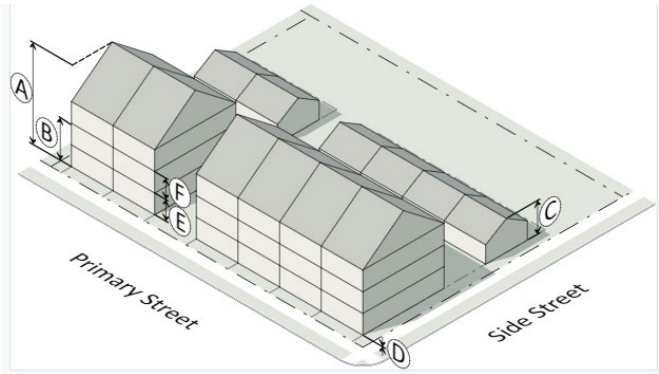

D. ACTIVATION

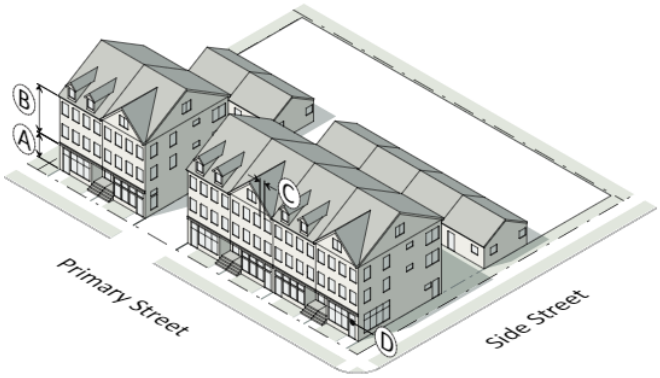

Source: Code Studio

	Building Height	
A	Principal building (max)	
	RMX	2 stories/35’
	RMX, MX, IMX	3 stories/45’
	Reduced height may be required when abutting a protected district (see Section 3.7.J)	
B	Principal building (min)	2 stories
C	Accessory structure (max)	24’
	Story Height	
D	Ground floor elevation	0’
E	Ground story height, floor to ceiling (min)	12’
F	Upper Story height, floor to ceiling (min)	9’

	Transparency	
A	Ground story (min)	40%
B	Upper story (min)	20%
C	Blank wall area (max)	35’
	Pedestrian Access	
D	Entrance facing primary street (each ground floor unit)	Required
	Building Elements	
	Porch	Not Allowed
	Stoop	Allowed
	Balcony	Allowed
	Gallery	Not Allowed
	Awning/Canopy	Allowed
	Forecourt	Not Allowed

3.6.8 TOWNHOUSE

A. LOT

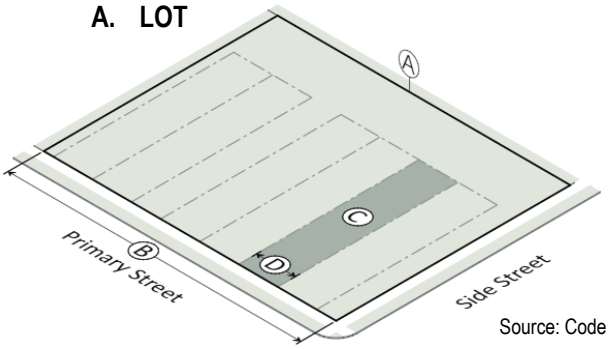

B. PLACEMENT

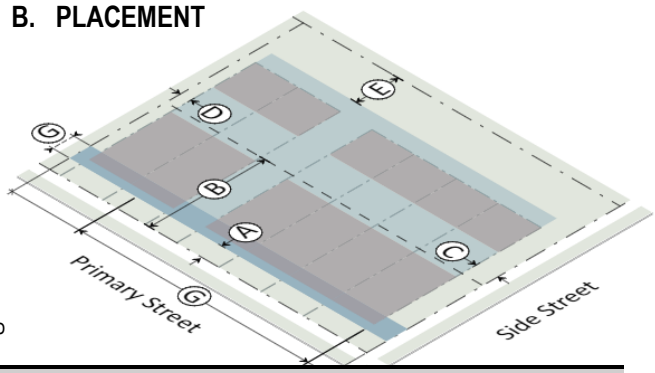

Source: Code Studio

Site Dimensions		
A	Site area (min)	10,000 SF
B	Site width (min)	100’
Lot Dimensions		
C	Lot area (min)	1,300 SF
D	Unit width (min/max)	20’ to 30’
E	RMX: Dwelling units per building (max)	6

Building Setbacks		
A	Primary street - principal buliding (min)	5’
B	Primary street - accessory structures (min)	40’
C	Side street (min)	10’
D	Side interior, end unit only (min)	5’
D	Side interior, abutting protected district, RMX or UR (min)	10’
E	Rear (min)	20’
E	Abutting alley	4’ or 20’ min
Build-to Zone (BTZ)		
F	Primary street (min/max)	5’ to 15’
G	Building in primary street BTZ (min % lot width)	70%

Parking Location

1. On-site parking not allowed between the building and the street.
2. Parking must be placed entirely to the rear of the townhouse and be rear-accessed.
3. Front-loaded townhouses are not allowed.
4. Garage doors must face the rear alley.

C. HEIGHT

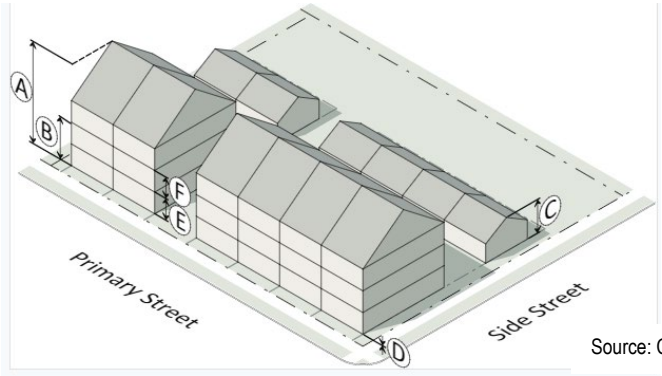

D. ACTIVATION

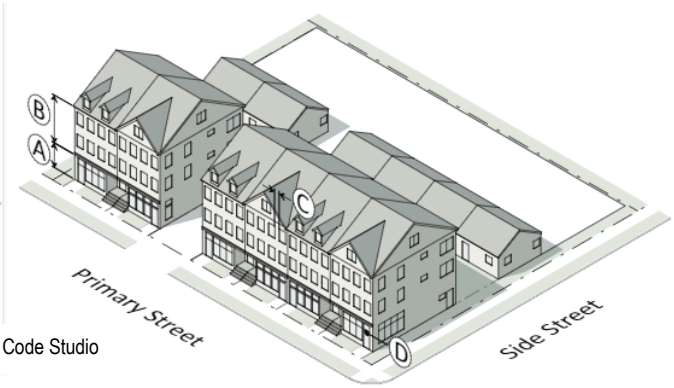

Source: Code Studio

Building Height		
A	Principal building (max)	
	UR, RMX, MX, IMX	2 stories/35’
	RMX, MX, IMX	3 stories/45’
	Reduced height may be required when abutting a protected district (see Section 3.7.J)	
B	Accessory structure (max)	24’

Story Height		
C	Ground floor elevation (min)	2’
D	Ground story height, floor to ceiling (min)	10’
E	Upper Story height, floor to ceiling (min)	9’

Transparency		
A	Ground story (min)	20%
B	Upper story (min)	20%
C	Blank wall area (max)	35’

Pedestrian Access		
D	Entrance facing primary street (each ground floor unit)	Required

Building Elements	
Porch	Allowed
Stoop	Allowed
Balcony	Allowed
Gallery	Not Allowed
Awning/Canopy	Not Allowed
Forecourt	Not Allowed

3.6.9 COTTAGE COURT

A. LOT **B. PLACEMENT**

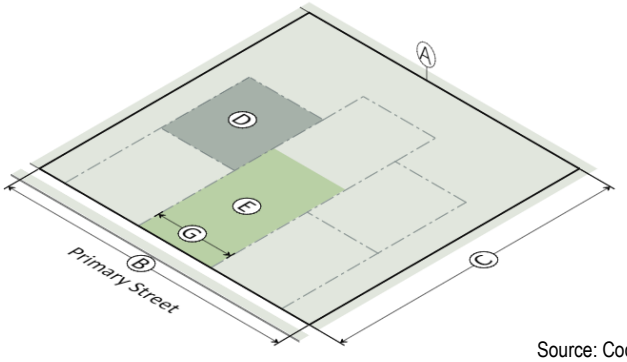

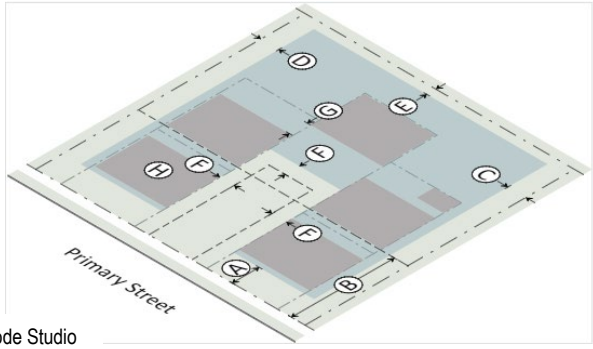

Source: Code Studio

Site Dimensions			Building Setbacks		
A	Site area (min)	22,500 SF	A	Primary street - principal buliding (min)	15’
	Site area per detached house (min)	4,500 SF	B	Primary street - accessory structures (min)	30’
	Detached houses per site (max)	9	C	Side street (min)	10’
B	Site width (min)	150’	D	Side interior (min)	7.5’
C	Site depth (min)	150’	E	Rear (min)	10’
Lot Dimensions			E	Abutting alley	4’ or 20’ min
D	Lot area (min)	1,200 SF	F	Abutting courtyard	0’
Courtyard			**Placement Limitations**		
E	Area (min)	3,000 SF	G	Building separation (min)	15’
F	Courtyard area per detached house (min)	600 SF	H	Principal building footprint (max)	1,200 SF
G	Width (min)	40’	**Parking Location**		
	A cottage lot abutting a courtyard that meets the above standards meets the platting requirements for frontage on an improved public street.		I	On-site parking not allowed between the building and the street.	

C. HEIGHT

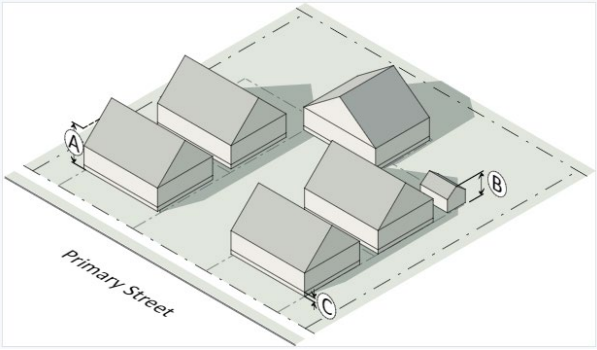

D. ACTIVATION

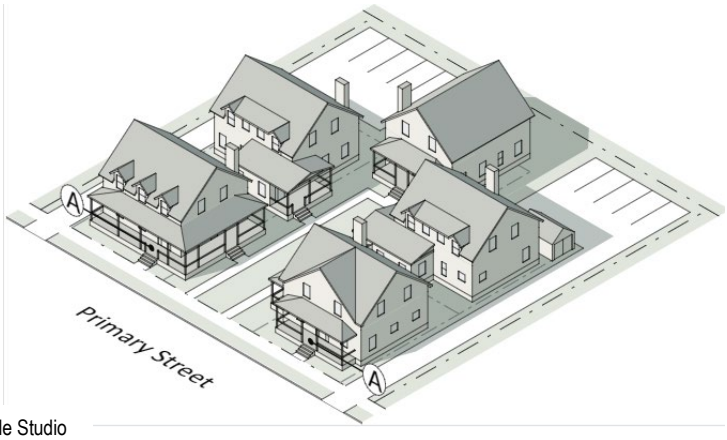

Source: Code Studio

Building Height		
A	Principal building (max)	
	UR	1 story/25’
	UR, RMX	2 stories/40’
B	Accessory structures (max)	18’
Story Height		
C	Ground floor elevation (min)	2’

Pedestrian Access		
A	Entrance facing primary street	Required for end units
Building Elements		
	Porch	Allowed
	Stoop	Allowed
	Balcony	Allowed
	Gallery	Not Allowed
	Awning/Canopy	Not Allowed
	Forecourt	Not Allowed

3.6.10 DETACHED HOUSE

A. LOT

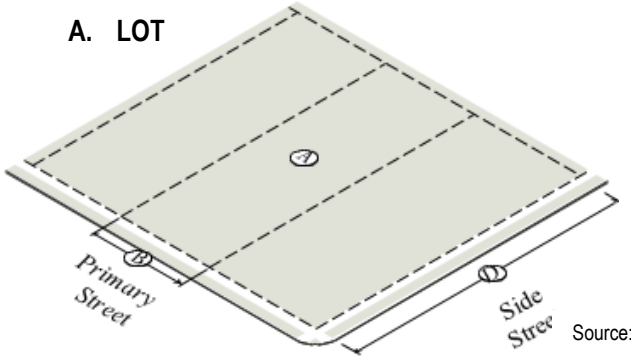

B. PLACEMENT

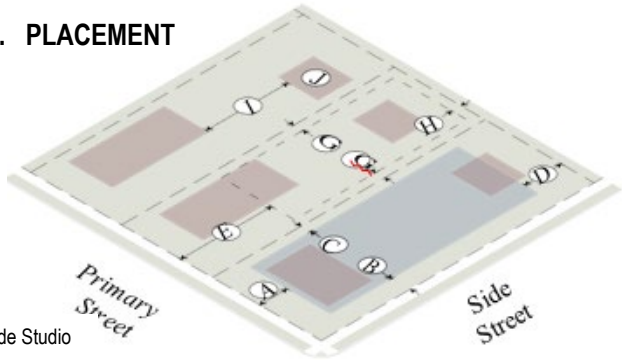

Source: Code Studio

Lot Dimensions		
A	Lot area (min)	7,500 SF
A	Lot area – rear loaded (min)	5,000 SF
B	Lot width (min)	50’
B	Lot width – rear loaded (min)	40’
C	Dwelling units per lot (max)	1

Principal Building Setbacks		
A	Primary street (min)	15’
B	Side street (min)	10’
C	Side interior (min)	7.5’
D	Rear (min)	20’
D	Abutting alley	4’ or 20’ min

Additional Requirements with Carriage House		
D	Lot depth (min)	120’
E	Additional detached dwelling unit (max)	1
F	Additional on-site parking (min)	1 space

Accessory Structure/Carriage House		
E	Primary street (min)	50’
F	Side street (min)	10’
G	Side interior (min)	7.5’
H	Rear (min)	5’
H	Abutting alley	4’ or 20’ min

Accessory Structure/Carriage House Limitations		
I	Building separation (min)	15’
J	Conditioned space (max)	600 SF

Parking Location

K The combined parking and driveway area cannot be more than 40% of the area between the front building facade and the front property line. Any parking in the front setback must have sufficient depth so that parked cars do not encroach on the adjacent sidewalk.

C. HEIGHT

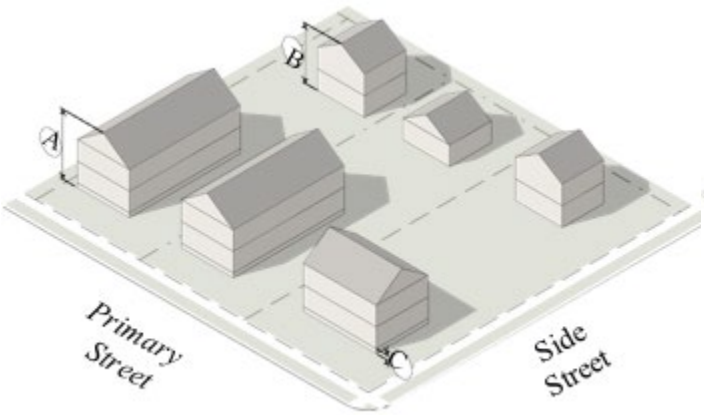

D. ACTIVATION

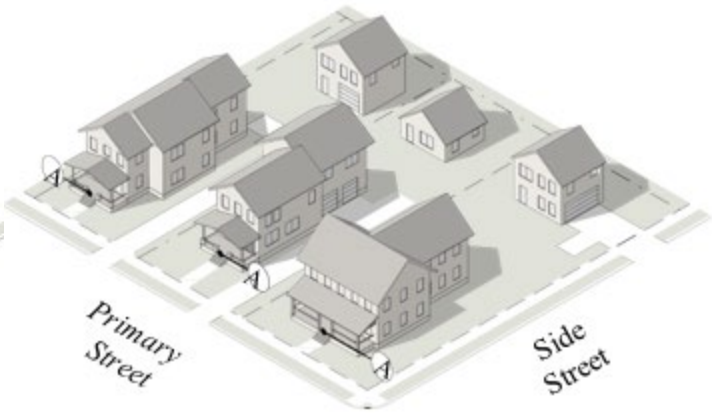

Source: Code Studio

Building Height		
A	Principal building (max)	
	UR, RMX	2 stories/35’
	UR, RMX	3 stories/40’
B	Accessory structure	24’
Story Height		
C	Ground floor elevation (min)	2’

Pedestrian Access		
A	Entrance facing primary street	Required
Building Elements		
	Porch	Allowed
	Stoop	Allowed
	Balcony	Allowed
	Gallery	Not Allowed
	Awning/Canopy	Not Allowed
	Forecourt	Not Allowed

3.7 BUILDING ELEMENTS

Individual building elements are allowed or required by each specific building type (see Section 3.6.1 to Section 3.6.10).

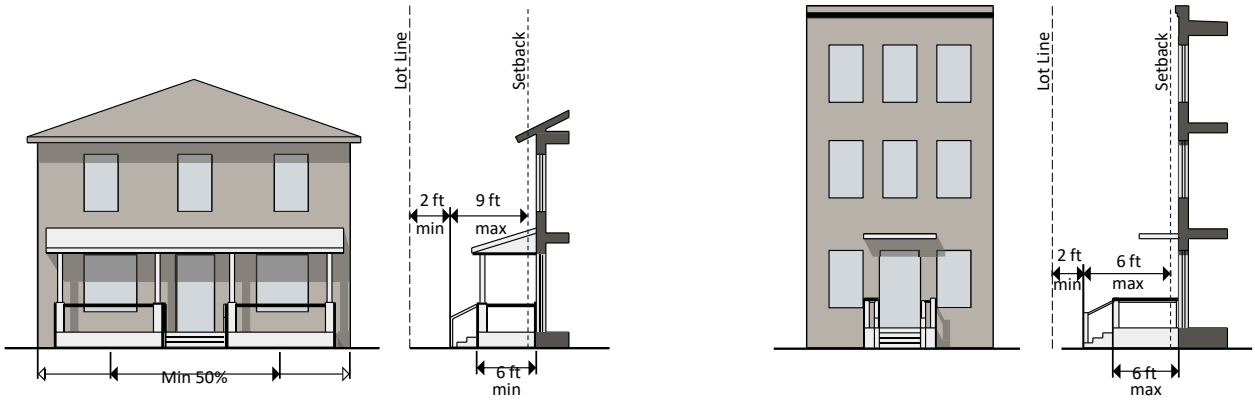

Source: Code Studio

3.7.1 PORCH

A. Defined

A raised structure attached to a building, forming a covered entrance to a doorway.

B. Standards

1. A front porch must be at least 6 feet deep (not including the steps).
2. A front porch must be contiguous, with a width not less than 50% of the building facade from which it projects.
3. A front porch must be roofed and may be screened, but cannot be fully enclosed.
4. A front porch may extend up to 9 feet, including the steps, into a required setback, provided that such extension is at least 2 feet from the vertical plane of any lot line.
5. A front porch may not encroach into the public right-of-way.

3.7.2 STOOP

A. Defined

A small raised platform that serves as an entrance to a building.

B. Standards

1. A stoop must be no more than 6 feet deep (not including the steps).
2. A stoop may be covered but cannot be fully enclosed.
3. A stoop may extend up to 6 feet, including the steps, into a required setback, provided that such extension is at least 2 feet from the vertical plane of any lot line.
4. A stoop may not encroach into the public right-of-way.

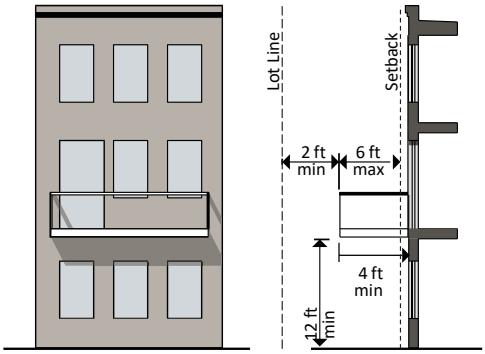

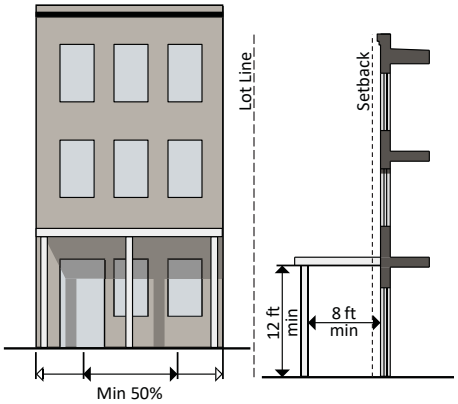

Source: Code Studio

3.7.3 BALCONY

A. Defined

A platform projecting from the wall of a building with a railing along its outer edge, often with access from a door or window.

B. Standards

1. A balcony must be at least 4 feet deep and may extend up to 6 feet into a required setback, provided that such extension is at least 2 feet from the vertical plane of any lot line, with the exception of paragraph b. below.
2. A balcony may encroach over a public sidewalk within the public right-of-way, if such encroachment is approved by the Administrator.
3. A balcony must have a clear height above the sidewalk of at least 12 feet.
4. A balcony may be covered and screened, but cannot be fully enclosed.

3.7.4 GALLERY

A. Defined

A covered passage extending along the outside wall of a building supported by arches or columns that is open on 3 sides.

B. Standards

1. A gallery must have a clear depth from the support columns to the building's facade of at least 8 feet and a clear height above the sidewalk of at least 12 feet.
2. A gallery must be contiguous and extend over at least 50% of the width of the building facade from which it projects.
3. A gallery may extend into a required setback.
4. A gallery may encroach over a public sidewalk within the public right-of-way, if such encroachment is approved by the Administrator.

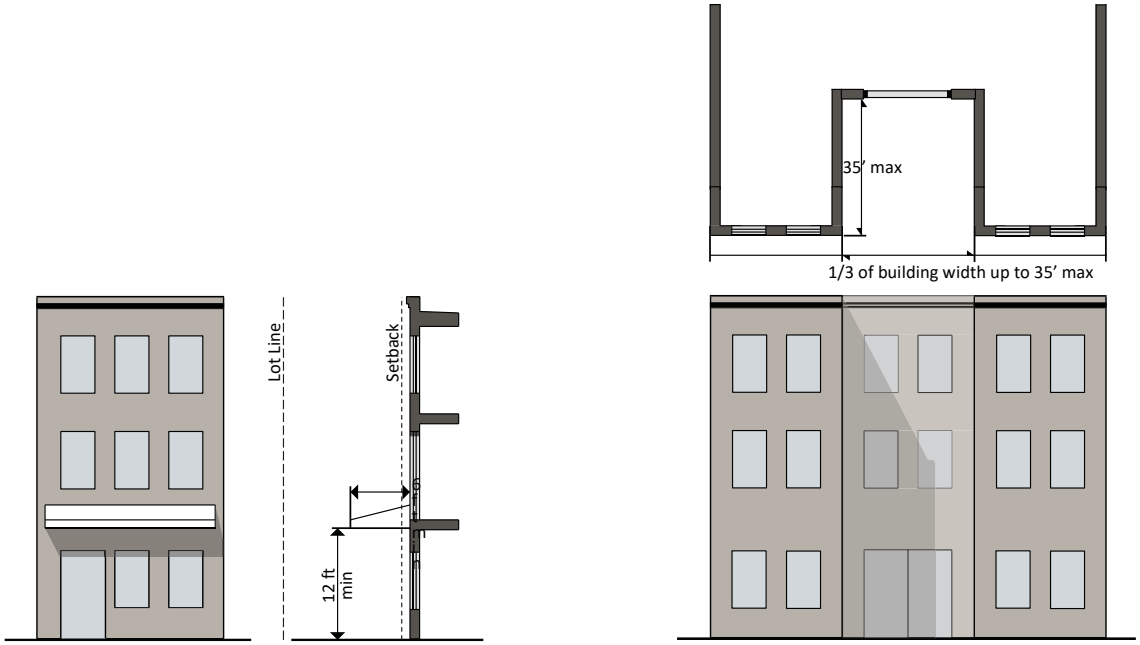

Source: Code Studio

3.7.5 AWNING/CANOPY

A. Defined

A wall-mounted, cantilevered structure providing shade and cover from the weather for a sidewalk.

B. Standards

1. An awning/canopy must be a minimum of 12 feet clear height above the sidewalk and must have a minimum depth of 6 feet.
2. An awning/canopy may extend into a required setback.
3. An awning/canopy may encroach over a public sidewalk within the public right-of-way, if such encroachment is approved by the Administrator.

3.7.6 FORECOURT

A. Defined

An open area at grade or within 30 inches of grade that serves as an open space, plaza or outdoor dining area.

B. Standards

1. A forecourt must be no more than 1/3 of the width of the building face and in no case wider than 35 feet in width.
2. A forecourt may be no more than 35 feet in depth.
3. A maximum of one forecourt is permitted per lot.
4. A forecourt meeting the above requirements is considered part of the building for the purpose of measuring the build-to zone.

3.8 RULES FOR ALL BUILDING TYPES

A. Site

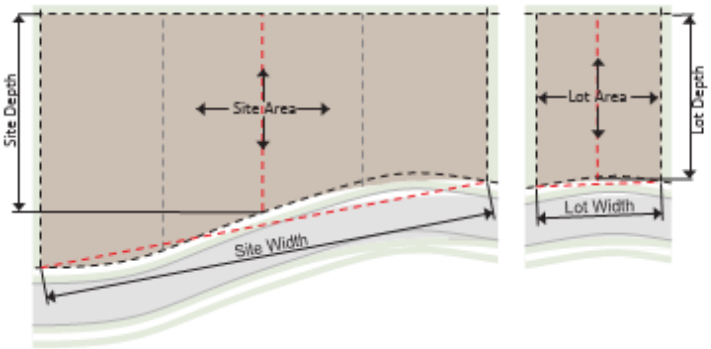

Source: Code Studio

B. Lot

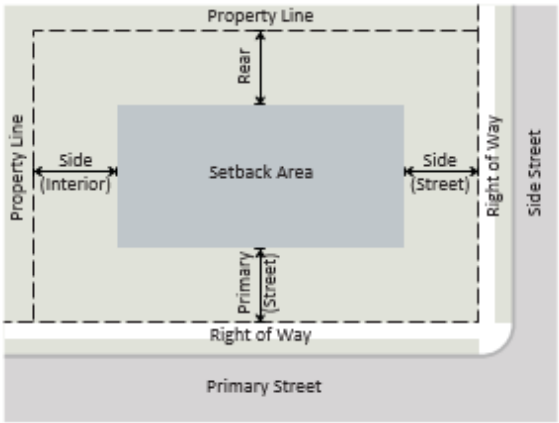

C. Building Setbacks

1. **Generally:** There are 4 types of setbacks – primary street, side street, side interior, and rear.
2. **Measurement of Building Setbacks**
   - **i.** Primary and side street setbacks are measured from the edge of the right-of-way.
   - **ii.** Side interior setbacks are measured from the side property line.
   - **iii.** When the side interior setback is 0 or 5 feet, the building or structure must be placed on the side property line or be placed a minimum of 5 feet from the side property line.
   - **iv.** Rear setbacks are measured from the rear property line or the edge of the right-of-way where there is an alley.
   - **v.** When the rear setback is 4 or 20 feet, the building or structure must be placed exactly 4 feet from the rear property line or be placed a minimum of 20 feet from the rear property line.

D. Courtyards

1. Where required, a courtyard must be one contiguous open area that meets the dimensional requirements under the specific building type.
2. A required courtyard must be provided at grade and cannot be built, parked or driven upon, except for emergency access and permitted temporary events.

E. Outdoor Amenity Space

1. **Generally:** Where required, outdoor amenity space must be provided on the lot and must be available for use by the occupants of the development.

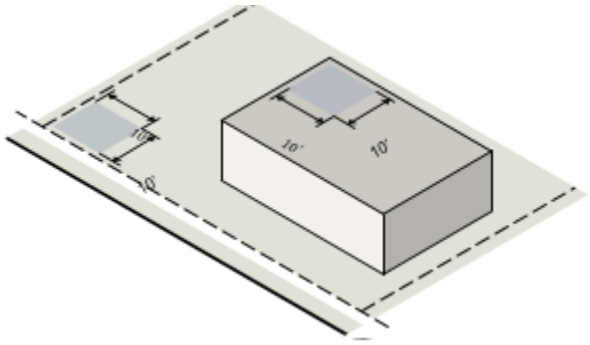

Source: Code Studio

2. Standards:

a. Outdoor amenity space may be met in one contiguous open area or in multiple open areas on the lot; however, to receive credit the area must be at least 10 feet in width and length.

b. Outdoor amenity space may be located at or above grade, except in RMX where outdoor amenity space must be located at grade.

c. Active outdoor amenities include a playground, athletic court, pool deck, spray deck, promenade, or dog park.

d. Passive park areas must include improvements such as trails, paths and seating areas. Formal or informal gardens, as well as greenbelts, are considered acceptable outdoor amenity areas.

e. Outdoor amenity space may include structures such as kiosks, bicycle racks, benches or other seating, sculpture, fountains and similar amenities. Such areas must not include signs unrelated to the amenities, utility areas, dumpsters or similar structures.

f. Outdoor amenity space provided at grade cannot be built, parked or driven upon, except for emergency access and permitted temporary events.

g. Outdoor amenity space provided above grade may be roofed but cannot be enclosed. Examples include a pavilion or gazebo.

F. Build-to Zone

1. Defined

a. The build-to zone is the area on the lot where a certain percentage of the front building facade must be located, measured as a minimum and maximum setback range from the edge of the right-of-way.

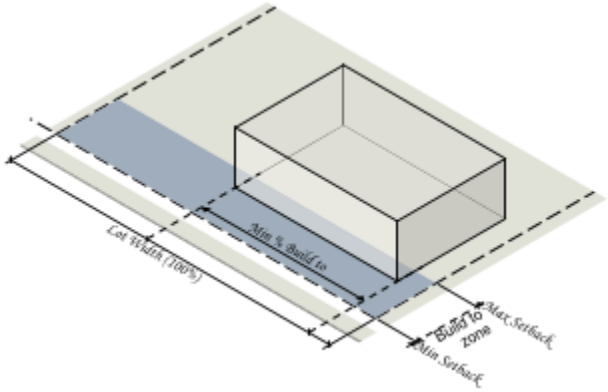

Source: Code Studio

b. The required percentage specifies the amount of the front building facade that must be located in the build-to zone, measured based on the width of the building divided by the width of the lot.

c. The build-to requirement does not apply to a designated service street in the approved Mixed-Use District/Master Development Plan.

2. Corner Lots

On a corner lot, a building facade must be placed within the build-to zone for the first 30 feet along the street extending from the block corner, measured from the intersection of the two right-of- way lines.

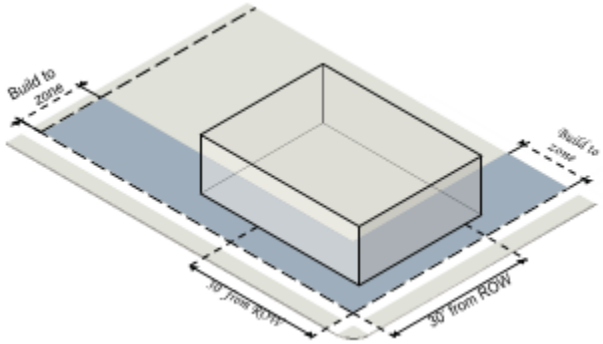

Source: Code Studio

3. Uses Allowed

With the exception of parking spaces, all structures and uses allowed on the lot are allowed in the build-to zone. Does not include encroachment into a required setback unless specifically permitted.

G. Transparency

1. The minimum percentage of windows and doors that must cover a ground story facade is measured between 2 and 12 feet above the abutting sidewalk.

Source: Code Studio

2. The minimum percentage of windows and doors that must cover an upper story facade is measured from the top of the finished floor to the top of the finished floor above. When there is no floor above, upper story transparency is measured from the top of the finished floor to the top of the wall plate.

3. Transparency applies to primary and side street-facing facades only.

4. Glass is considered transparent where it has a transparency higher than 80% and external reflectance of less than 15%.

5. Windows cannot be made opaque by window treatments (except operable sunscreen devices within the conditioned space).

H. Blank Wall Area

1. Blank wall area means a portion of the exterior facade of the building that does not include: windows or doors; columns, pilasters or other articulation greater than 12 inches in depth; or a substantial material change (paint color is not considered a substantial change).

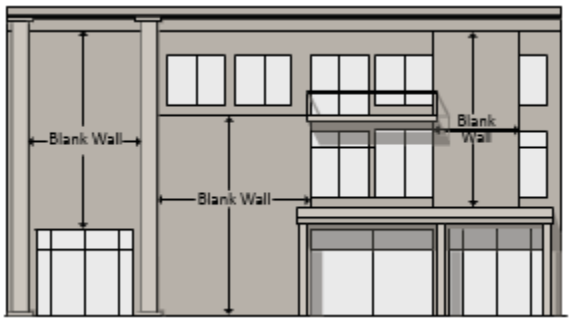

Source: Code Studio

2. Blank wall area applies in both a vertical and horizontal direction.
3. Blank wall area applies to ground and upper story primary and side street-facing facades.

I. Pedestrian Access

1. An entrance providing both ingress and egress, operable to residents or customers at all times, is required to meet the street-facing entrance requirements. Additional entrances off another street, pedestrian area or internal parking area are permitted.
2. The entrance spacing requirements must be met for each building, but are not applicable to adjacent buildings.
3. An angled entrance may be provided at either corner of a building along the street to meet the street-facing entrance requirements.

J. Protected Districts

1. **Applicability**
   a. Any protected district triggers the application of the following requirements.
   b. A protected district is defined as any RN, LDR or MDR district.
2. **Bulk Plane:** A bulk plane is required where a Mixed-Use District abuts a protected district. When abutting a protected district, a building must not extend into a 45-degree angular plane projecting over the subject property measured from a height of 35 feet at the side interior or rear setback line.

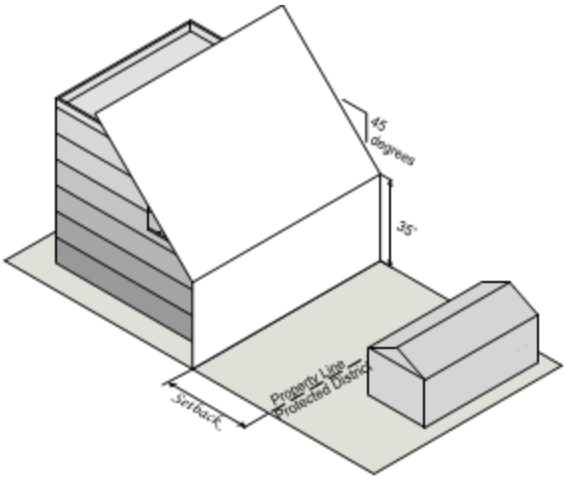

Source: Code Studio

3. Buffer Strip

A buffer strip meeting the standards is required where a Mixed-Use District abuts a protected district.

K. Building Materials

1. **Applicability:** The requirements of this section apply to all building facades.
2. **Primary Materials**: The following materials are required for not less than 75% of the building wall surface area on each facade:
   - **a.** Brick;
   - **b.** Cementitious siding;
   - **c.** Glass curtain wall;
   - **d.** Stone;
   - **e.** Stucco (cementitious finish); and
   - **f.** Wood (only permitted in RMX - Detached).
3. **Material Change:** Primary material changes must occur only at inside corners
4. **Accent Materials:** The following materials may make up 25% of the building wall surface area on each facade:
   - **a.** Cementitious siding;
   - **b.** External Insulation Finishing System - EIFS (for trim and cornice elements only);
   - **c.** Glass block;
   - **d.** Gypsum Reinforced Fiber Concrete (GFRC— for trim elements only);
   - **e.** Metal (for beams, lintels, trim elements and ornamentation only);
   - **f.** Pre-cast masonry (for trim and cornice elements only);
   - **g.** Split-faced block (for piers, foundation walls and chimneys only); and,
   - **h.** Wood – for trim elements in all districts and for siding or shingles in the RMX-Detached Building Types.

5. Alternate Materials: Alternate building materials or those not normally permitted as primary materials may be approved by the Midtown Development Review Committee.

3.9 LAND USE

3.9.1. RMX District – Attached Building Types Permited retail uses such as art galleries, personal services, repair services (not including repairs to cars and trucks), restaurant, and retail sales are permitted in a RMX – Attached Building subject to the following:

- The use must be located on the first floor of a stacked flat.
- The stacked flat must be on a lot loacated at the intersection of two public streets; and
- The use cannot exceed 1,500 square feet in gross floor area.

3.9.2 PERMITTED USES

A. Uses allowed in each district are shown in Chapter 2. A lot or building must be occupied with only the uses allowed on the permitted use table in Section 2.5.3 Use Table.

B. Any one or more land uses allowed in a district may be established on any lot within that district, subject to the permitted use table and in compliance with all applicable requirements of the UDO.

3.10 SITE DEVELOPMENT

3.10.1 PARKING

A. Applicability: No permit for the construction, reconstruction, extension or alteration of any building, structure or use of land and no building or land, or any part of any building or land, may be occupied or used until parking has been provided in accordance with the requirements of the UDO.

B. Vehicle Parking

1. The minimum vehicle parking spaces are required in Chapter 7.

2. Outdoor dining areas that are located in the build-to-zone or a forecourt allowed under *Building Elements* are exempt from the calculation of required vehicle parking spaces.

3. In each parking lot or garage containing over 100 parking spaces, at least 2 spaces within the 10 spaces closest to the primary entrance to the building must be reserved for a hybrid or electric vehicle and must have a sign indicating that reservation.

C. Location of Parking: Required vehicle parking must be located on the same lot as the use they are intended to serve, except as listed below.

1. On-Street Parking

a. One on-street parking space may be substituted for every required parking space, provided the on-street space is located on a public right-of-way immediately abutting the subject property.

b. Each on-street parking space may only be counted for one property. Where a space straddles an extension of a property line, the space may only be counted by the owner whose property abuts 50% or more of the on-street parking space.

2. Remote Off-Site Parking

a. All required parking spaces, except required accessible spaces, can be located off-site if

the remote parking area is located within 660 feet from the primary entrance of the use served.

b. Up to 50% of the required parking spaces can be located between 660 feet and 1,320 feet from the primary entrance of the use served.

c. All remote parking spaces used to meet an on-site parking requirement must be located within the boundaries of a Mixed-Use District.

d. The remote parking area is measured in walking distance from the nearest point of the remote parking area to the primary entrance of the use served.

3.11 STREET TYPES

The following streetscapes are examples of varying dimensional and installation street types that may be required for the development of mixed-use districts to provide for vehicle, pedistrian, and bicycle transportation choices:

A. Highway 521 / One-Way Lane with Bike Lane, Reversed On-Street Parking and Sidewalk

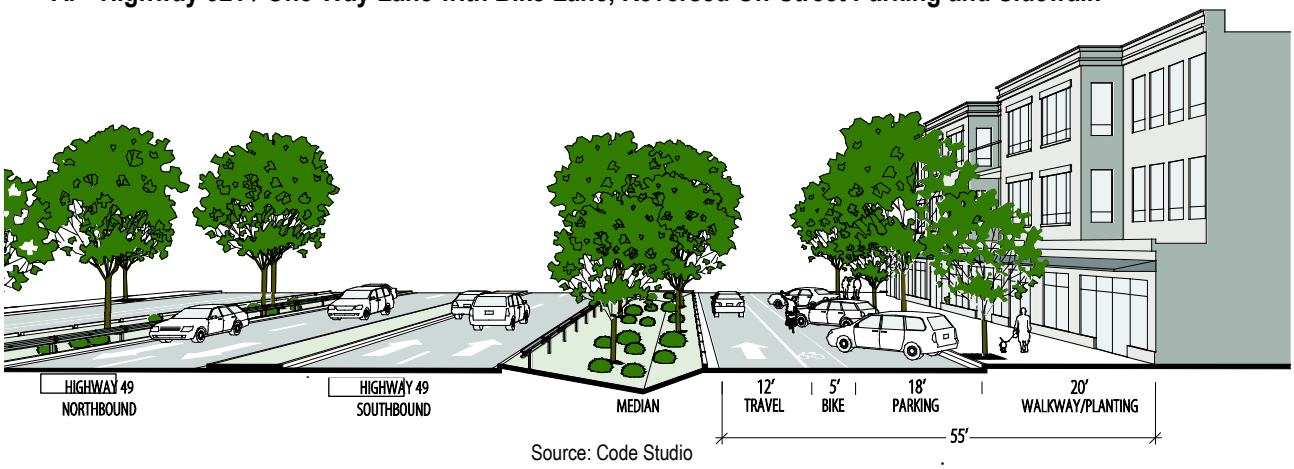

Source: Code Studio

B. Two-Lane Divided with On-Street Parking and Sidewalks

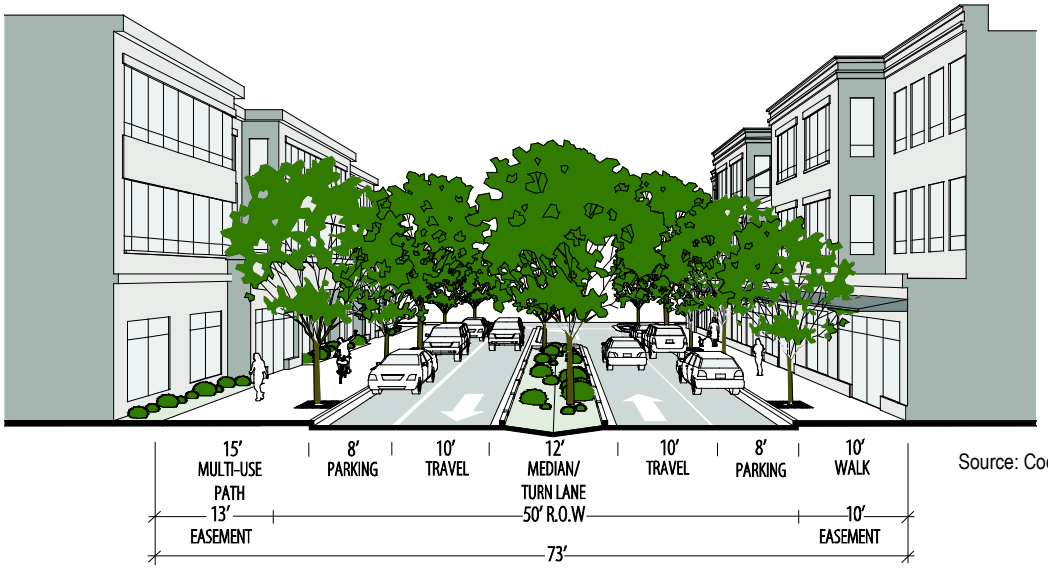

Source: Code Studio

C. Two-Lane with Bike Lanes, On-Street Parking and Sidewalks

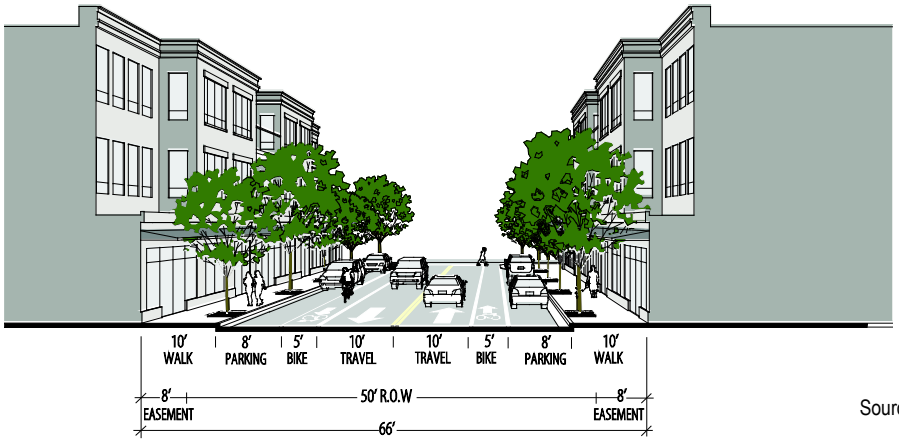

Source: Code Studio

D. Two-Lane with On-Street Parking, Multi-Use Path, and Sidewalk

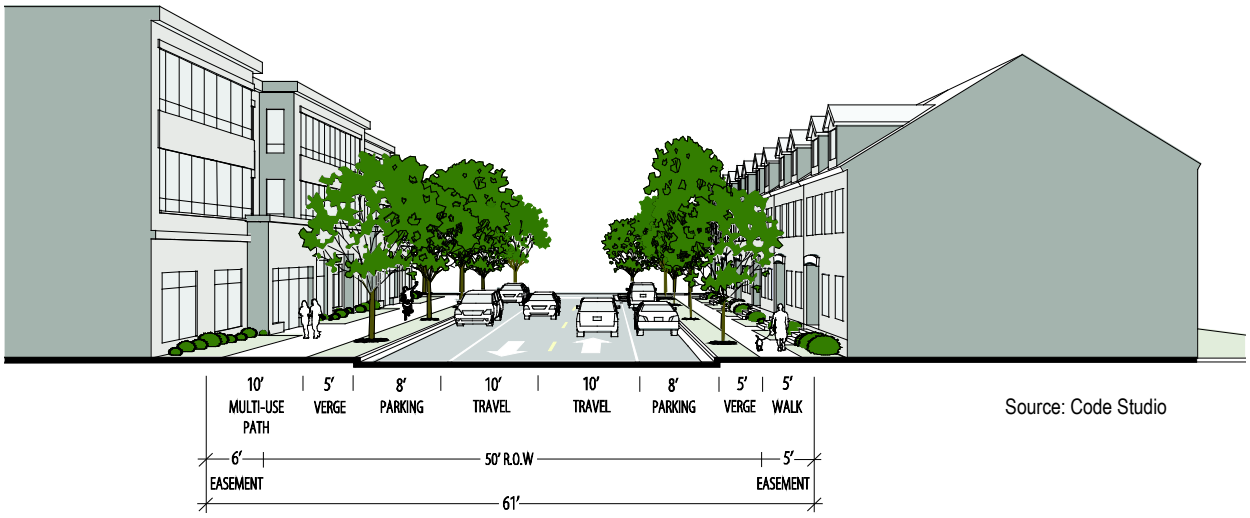

Source: Code Studio

E. Two-Lane Divided with Bike Lanes and Sidewalks

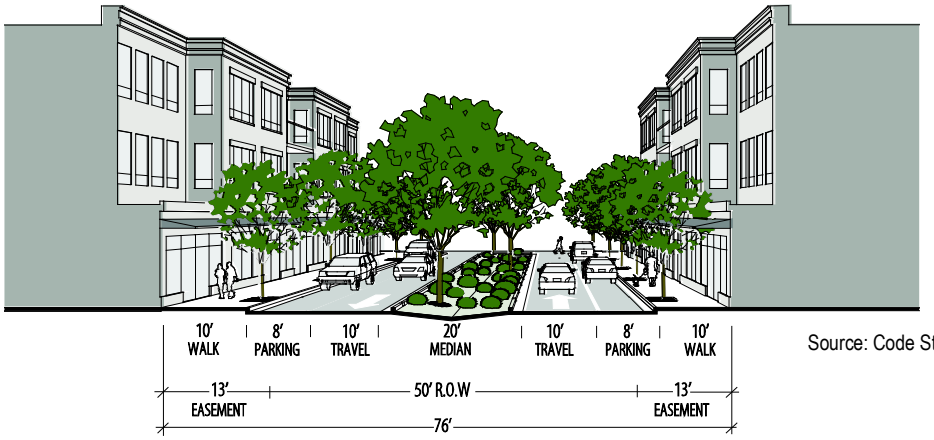

Source: Code Studio

F. Two-Lane Divided with On-Street Parking and Sidewalks

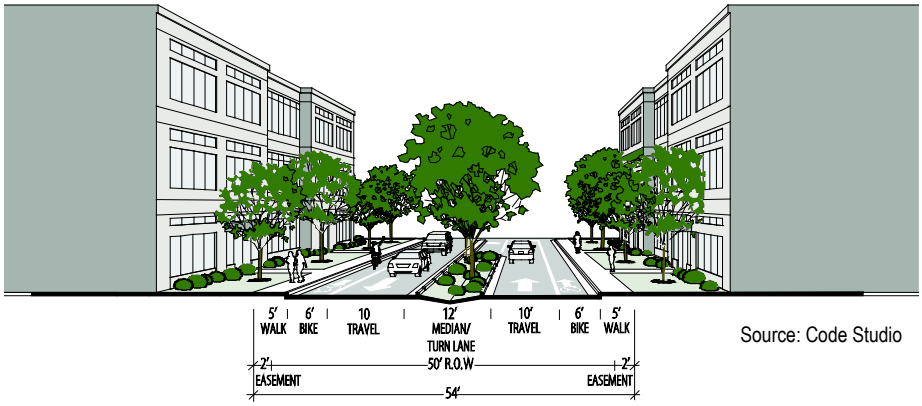

Source: Code Studio

G. Two-Lane with On-Street Parking and Sidewalks

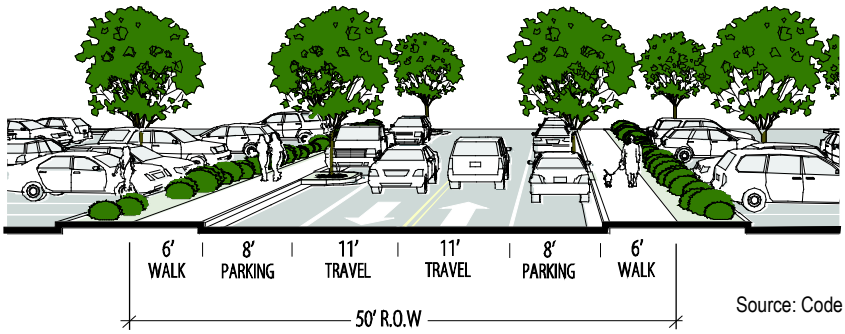

Source: Code Studio

H. Two-Lane with On-Street Parking, Verge (Border), and Sidewalks

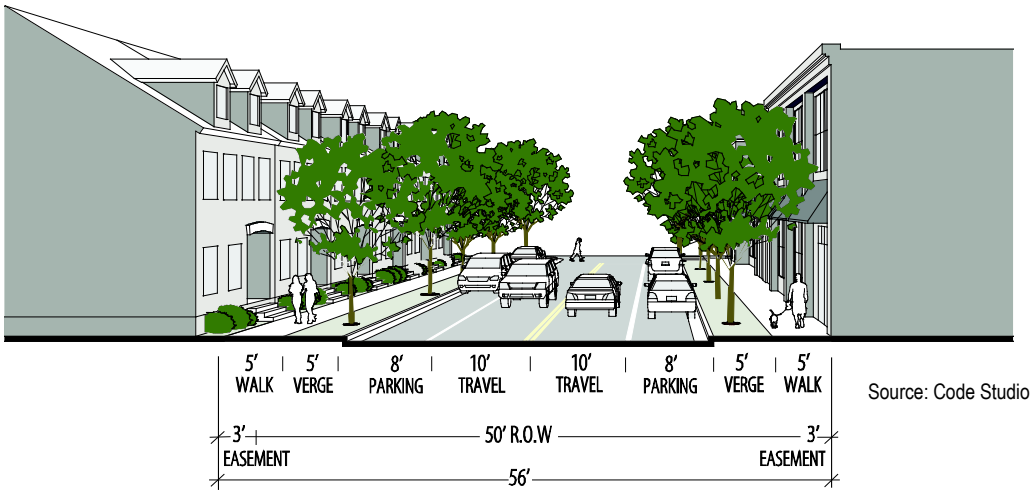

Source: Code Studio

3.12 ADMINISTRATION

The Technical Review Committee is designated as the Committee whose purpose and responsibility as related to the Mixed-Use Districts is to utilize to the fullest extent possible its individual and collective technical expertise, to coordinate and expedite the review, processing, recommendation and pre-hearing procedures.

All procedures for permits, amendments and variances must follow the applicable requirements and procedures as established by County codes, or other chapters of the UDO, such as Chapter 9, Administration.

3.12.1 DEVIATIONS

A. Authority

During the Site Plan Review process, the Technical Review Committee is authorized to recommend approval of deviations to certain provisions of the UDO, where, due to special conditions, strict enforcement would be physically impractical. This optional process may occur only where the applicant requests a deviation to a standard as specified below.

B. Permitted Deviations

The Technical Review Committee must review the request in light of the purpose and intent of this Code. The Technical Review Committee is authorized to recommend the approval of a deviation for the following:

1. **Build-to Zone (BTZ)**
   a. Increase or reduction of up to 20% of the minimum or maximum required primary street or side street setback.
   b. Reduction of up to 5% of the minimum required build-to percentage.
2. **Ground Floor Elevation:** Reduction of up to 1' of the minimum required ground floor elevation.
3. **Story Height:**

   Reduction of up to 10% of the minimum required ground and upper story floor heights.
4. **Transparency:** Reduction of up to 5% of the minimum percentage of windows and doors that must cover street-facing building facades.
5. **Blank Wall Area:** Reduction of up to 15% of the maximum allowed blank wall area on street-facing building facades.
6. **Pedestrian Access:** Reduction of up to 10% of the minimum required distance between street-facing entrances.
7. **Alternate Materials:** Alternate building and fence and wall materials. Alternate materials must be considered equivalent or better than the materials listed and regionally-available materials are preferred.
8. **Parking:** Reduction of 10% of the minimum required vehicle parking spaces may be recommended by the TRC, on a case-by-case basis, based on applicant-submitted parking data that illustrates that the required parking ratios do not accurately apply to their specific development or on the basis of transit service, shared parking or transportation demand management measures.

C. Unlisted Standards

Any request for relief from a required standard, other than those listed above, must be reviewed pursuant to the procedures contained in the UDO, Chapter 9.

3.12.2 NONCONFORMITIES

A. Purpose: The purpose of this section is to establish regulations and limitations on the continued existence of uses, buildings and structures established prior to the effective date of the UDO that do not conform to the provisions of this Code.

B. Nonconforming Uses

Authority to Continue: Any existing use that does not conform to this Code may be continued as long as it remains otherwise lawful, subject to the provisions of Chapter 9.

C. Nonconforming Buildings or Structures

1. **Authority to Continue:** Any existing building or structure that does not conform to this Code may be continued as long as it remains otherwise lawful, subject to the provisions of Chapter 9.

2. **Enlargement, Repair, Alterations:** Any existing building or structure that does not conform to this Code may be enlarged, maintained, repaired, or altered; provided, that no enlargement, maintenance, repair or alteration creates an additional nonconformity or increases the degree of the existing nonconformity of all or any part of the building or structure, except as specified in Section 3.12.E. Nonconforming Build-to Requirement.

3. **Damage or Destruction**

   a. When an existing building or structure that does not conform to this Code is damaged or destroyed by 50% or more of the fair market value of the building or structure immediately prior to the damage, the building or structure must conform, in its entirety, to the requirements of this UDO.

   b. When an existing building or structure that does not conform to this UDO is damaged or destroyed by less than 50% of the fair market value of the building or structure immediately prior to the damage, the building or structure may be repaired and reconstructed as it was before the damage or destruction, provided that the repair or reconstruction is completed within 12 months of the date of the damage. Upon evidence of hardship, the Administrator may extend the above time limit once, up to a time period of 12 consecutive months.

D. Relocation: An existing building or structure that does not conform to this Code cannot be relocated in whole or in part to any other location on the same or any other lot unless the entire building or structure conforms to this Code after being relocated, except as specified in Section 3.12.E Nonconforming Build-to Requirement.

E. Nonconforming Build-to Requirement

1. **Additions.** When an existing building is being expanded and the building doesn't meet the build-to requirement, the following nonconforming provisions apply.

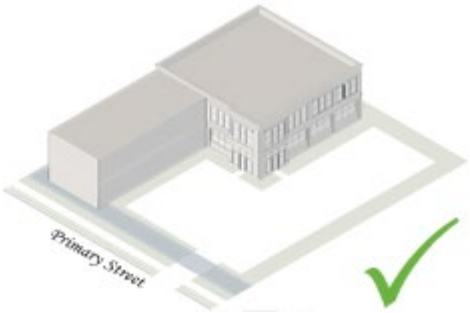

Front Addition. Any addition to the front must be placed in the build-to zone. The addition does not have to meet the build-to percentage for the lot.

Rear Addition. Rear additions are allowed because the extension does not increase the degree of the nonconformity.

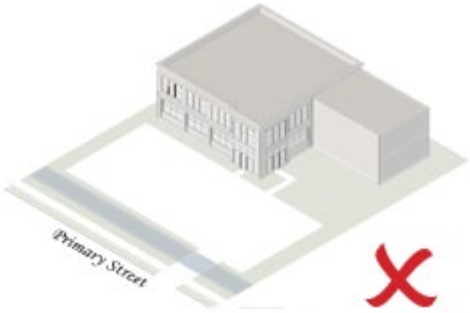

Side Addition. Side additions are not allowed because the extension increases the width of the building not located in the build- to zone.

2. **New Buildings:** Where a new building is being constructed on a lot or site with an existing building on it that doesn't meet the build-to requirement, the following nonconforming provisions apply.

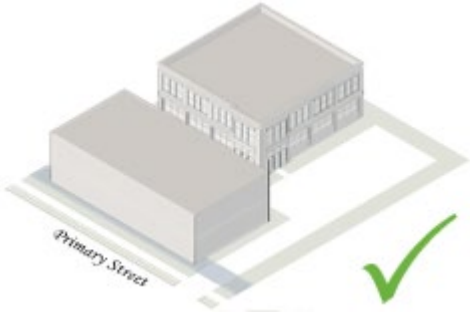

Front New Building. All new buildings must be placed in the build-to zone until the build-to percentage for the lot has been met.

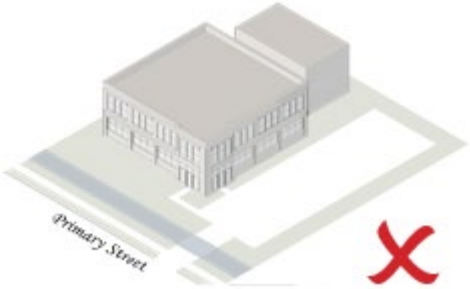

Rear New Building. New buildings located outside of the build-to zone are not allowed until the build-to percentage for the lot has been met.

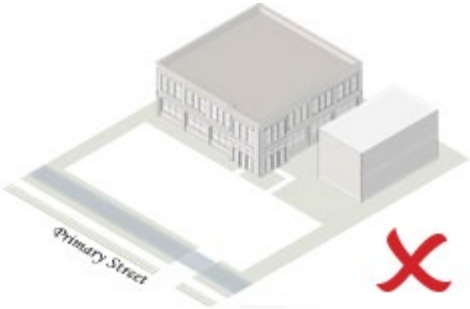

Side New Building. New buildings located outside of the build-to zone are not allowed until the build-to percentage for the lot has been met.

Source: Code Studio

4 OVERLAY DISTRICTS

4.1 GENERAL PROVISIONS

4.1.1 DISTRICT INTENT STATEMENTS

For purposes of managing certain environmentally sensitive or visually important geographic areas, certain overlay districts have been established to impose design, use, or other standards in addition to the requirements of the underlying base district.

4.1.2 OVERLAY DISTRICTS DESCRIPTIONS

OVERLAY DISTRICT	DESCRIPTION
ENVIRONMENTAL OVERLAYS	
A. McWhirter Field Aviation Overlay	Designed to restrict development within and adjacent to the flight paths of McWhirter Field that may pose a hazard to aviation.
B. Carolina Heelsplitter Overlay	Imposes certain restrictions on new development that drains into the Six Mile Creek Watershed Basin to protect the endangered species and its habitat.
CORRIDOR OVERLAYS	
A. Carolina Thread Trail Overlay	Established to preserve and develop the proposed greenway corridors identified in the Lancaster County Carolina Thread Trail Greenway Master Plan, 2011.
B. Highway Corridor Overlay	Creates design standards for all parcels fronting on or within 1,000 feet of the right-of-way of U.S. Highway 521 from the state line to Highway 75 (Waxhaw) and parcels that front Highway 160.
CHARACTER PROTECTION OVERLAYS	
A. Cluster Subdivision Overlay	Alternative to traditional subdivision design, with the principle purpose being to encourage open space and conservation in Medium Density Residential District. Site planning technique concentrates buildings and structures to the most buildable areas, preserving the remaining area as open space for recreation and preservation of significant site features.
B. Equestrian Oriented Subdivision Overlay	Established for residential developments with an emphasis on equestrian activities and amenities; i.e. Black Horse Run development.

**Note: Standards for flood damage prevention and river buffers are included in Chapter 8, Natural Resources Protection.*

4.2 ENVIRONMENTAL OVERLAYS

4.2.1 MCWHIRTER FIELD AVIATION OVERLAY DISTRICT (MFA0)

A. PURPOSE AND INTENT

The McWhirter Field Aviation Overlay District is established to set height and land use limitations for airport safety within the vicinity of McWhirter Field in accordance with the Airport Layout Plan. The intent of the McWhirter Field Aviation Overlay is to promote the health, safety, and general welfare of the residents of Lancaster County. The following requirements pertain to the compatibility of land uses within the vicinity of McWhirter Field as well as height considerations of structures and natural vegetation such as trees. All applicable requirements meet the Code of Laws of South Carolina, as amended, and are adopted under authority granted by South Carolina Code of Laws, Title 55, Section 55-9-240 and Section 55-9-260, as amended.

B. DISTRICT BOUNDARIES AND APPLICABILITY

This ordinance shall be applicable to the area designated with Lancaster County in the vicinity of McWhirter Field as shown on the map entitled McWhirter Field Aviation Overlay Land Use Zones Map as incorporated with the Official Zoning Map as maintained by the Lancaster County Planning Department.

C. PERMITTED USES AND DETERMINATIONS OF COMPATIBILITY

As an overlay, the McWhirter Field Aviation Overlay supplements standards established elsewhere in the UDO. Any use permitted in the underlying zoning district, set forth in Chapter 2 of the UDO, shall be permitted in the McWhirter Field Aviation Overlay District provided it complies with the provisions of Section D, Height Restrictions and Limitations, and Section E, Land Use Restrictions and Limitations. However, if a use is compatible with the Airport Land Use Compatibility Guidance, but is not permitted in the base zoning district, such use is not allowed.

The South Carolina Airport Compatible Land Use Evaluation (CLUE) Tool is an online map that evaluates the location of developments within the McWhirter Field Aviation Overlay District. Title 55 of the South Carolina Code, as amended, requires the South Carolina Aeronautics Commission (SCAC) to develop and provide maps of airport-specific Safety Zones and Land Use Zones via the CLUE tool to local jurisdictions owning or located near publicly-owned airports, and requires jurisdictions to notify SCAC of certain land use changes in these zones. The intent of these requirements is to enhance the level of land use compatibility near all public-use airports in South Carolina. The CLUE tool is accessible to the public at www.scaeronautics.com/CLUE.

D. HEIGHT RESTRICTIONS AND LIMITATIONS

1. Height Restriction Zones Established

In order to carry out this ordinance, certain zones are hereby created and established by FAR Part 77, which includes all of the land lying beneath the approach surfaces, primary surface, transitional surfaces, horizontal surface, and conical surface as they apply to the current Airport Layout Plan for McWhirter Field. Such zones are shown on the McWhirter Field Aviation Overlay Land Use Zones as incorporated with the Official Zoning Map. An area located in more than one of the following zones is considered to be only in the zone with the most restrictive height limitation. The various Airspace Zones are hereby established and defined as follows:

a. **Approach Zones:** The approach zones are the areas beneath the Part 77 approach surfaces, as defined by Part 77, §77.19(d), of Title 14 of the Code of Federal Regulations, or in successor federal regulations.

b. **Primary Zone:** The primary zone is that area of the primary surface, as defined by Part 77, §77.19(c), of Title 14 of the Code of Federal Regulations, or in successor federal regulations.

c. **Transitional Zones:** The transitional zones are the areas beneath the Part 77 transitional surfaces, as defined by Part 77, §77.19(e), of Title 14 of the Code of Federal Regulations, or in successor federal regulations.

d. **Horizontal Zone:** The horizontal zone is the area beneath the Part 77 horizontal surface, as defined by Part 77, §77.19(a), of Title 14 of the Code of Federal Regulations, or in successor federal regulations.

e. **Conical Zone:** The conical zone is the area beneath the Part 77 conical surface, as defined by Part 77, §77.19(b), of Title 14 of the Code of Federal Regulations, or in successor federal regulations.

2. Height Limitations

No structure or tree shall be erected, altered, allowed to grow, or maintained in the airport zones to a height in excess of the height limit as determined by the aerial contours appearing on the McWhirter Field Aviation Overlay Land Use Zones Map or referred to in Section 4.2.1.D of this Document. If a tree is determined to be an airport hazard, Lancaster County will coordinate with the property owner(s) to bring such tree into conformance with this ordinance.

E. LAND USE RESTRICTIONS AND LIMITATIONS

1. Land Use Restriction Zones Established

In order to carry out this ordinance, certain zones are hereby created and established, which include land lying beneath the Airport Land Use Zones as they apply to the current Airport Layout Plan for McWhirter Field. Such zones are shown on the McWhirter Field Aviation Overlay Land Use Zones Map. An area located in more than one of the zones described herein is considered to be only in the zone with the most restrictive limitation. The various Airport Land Use Zones are hereby established:

Zones A, B1, and B2 are located within the Approach Zone and Transitional Zone as defined in Sections 4.2.1.D.1.a. Zones C1 and C2 are located within the Primary Zone and Transitional Zones as defined in Sections 4.2.1.D.1.b and 4.2.1.D.1.c respectively. Zone D is located within the Horizontal Zone as defined in Section 4.2.1.D.1.d. Zone E is located within the Conical Zone as defined in Section 4.2.1D.1.e. Zone F is a 6-mile boundary from McWhirter Field that prohibits new municipal solid waste landfills (MSWL) within Zones A, B1, B2, C1, C2, D, E, and F.

2. Land Use Limitations

Such applicable land use limitations are hereby established for each of the Airport Land Use Zones in order to prevent incompatible land uses which would compromise aeronautical activity at McWhirter Field, to protect people and property on the ground in case of an accident, to limit population and building density in the runway approach areas, to create sufficient open space, and to restrict those uses which may be hazardous to the operational safety of aircraft operating to and from McWhirter Field and minimize injury to the occupants of aircraft involved in accidents. The following land use limitations within Zones A, B1, B2, C1, C2, D, E, and F shall apply to those portions of the parcel contained within the underlying zones as indicated on the attached McWhirter Field Aviation Overlay Land Use Zones Map.

McWhirter Field Land Use Compatibility Guidance *							
Airport Land Use Zone Designation	**Zone A**	**Zones B1 & C2**	**Zone B2**	**Zone C1**	**Zone D**	**Zone E**	**Zone F**
Agriculture, Farming and Animal Keeping							
Crop Production-Dry and Irrigated Farming	C 1,2	P	C 2	C 1,2	P	P	P
Specialty Crops, Nurseries/Greenhouses, Landscape Materials	-	P	P	-	P	P	P
Row-Crop Processing and Packaging, Wineries	-	P	P	-	P	P	P
Animal Processing and Packaging	-	C 2,3	P	-	P	P	P
Truck Farming, Roadside Stands, Farmers Markets	-	C 2,3	C 2,5	-	P	P	P
Pasture and Rangeland Grazing	-	P	P	P	P	P	P
Animal Feed Lots (Commercial Hogs, Dairies)	-	P	P	-	P	P	P
Animal Feed Lots (Commercial Poultry)	-	-	-	-	P	P	P
Game Preserves, Fish Farming	-	-	C 2	-	P	P	P
Feed Lots, Stockyards, Animal Commodity Sales Yards	-	C 2	C 2	-	P	P	P
Animal Hospital, Veterinary Clinic, Kennels, Pet Boarding	-	C 3	C 5	-	P	P	P
Equestrian Facilities, Exotic Animals	-	C 3	C 5	-	P	P	P
Public Use Facilities, Institutions and Utilities							
Civic-Use Convention Center, Auditorium, Concert Hall	-	-	-	-	C 1,2	P	P
Schools, Hospitals, and Correctional Facilities	-	-	-	-	C 1,2	P	P
Libraries, Museums, Churches, Day Care, Social/Civic Clubs	-	-	-	-	C 1,2	P	P
Parks, Athletic Fields, Playgrounds, Picnic Areas	-	-	-	-	C 1,2	P	P
Cemeteries	-	P	P	-	P	P	P
Public Utilities (Excludes Electric Power Plants, Lines)	-	C 1,2	C 1,2	-	C 1,2	C 1,2	P
Electric Power Plants and Overhead Transmission Lines	-	C 1,2	C 1,2	-	C 1,2	C 1,2	P
Solid-Hazardous Waste, Landfills (Excludes Transfer Stations)	-	-	-	-	-	-	-
Recycling	-	C 2,3	C 2,5	C 2	C 2	C 2	P
Residential							
Single Family Residential	-	C 2,4,7	C 2,4,7	-	C 7	P	P
Multi-Family Residential, Mobile Home Units/Parks	-	C 2,4,7	C 2,4,7	-	C 2,6,7	P	P
Group Homes, Convalescent Facilities, Nursing/Family Care	-	-	-	-	C 2,6,7	P	P
Apartments, Duplexes, Triplex, Quadraplex, Townhomes, Condominiums	-	C 2,4,7	C 2,4,7	-	C 2,6,7	P	P
Temporary Housing	-	C 2,4,7	C 2,4,7	-	C 2,6,7	P	P

(P) Permitted Land Use *(C) Conditional Land Use* *(-) Prohibited Land Use* ** See Table Key on page 4-6*

(Ord. No. 2019-1620, 12.9.19; Ord. No. 2020-1645, 2.24.20)

McWhirter Field Land Use Compatibility Guidance *							
Airport Land Use Zone Designation	**Zone A**	**Zones B1 & C2**	**Zone B2**	**Zone C**	**Zone D**	**Zone E**	**Zone F**
Commercial Recreational							
Swimming Pools, Water Park, Water Slides	-	-	P	-	P	P	P
Gyms, Health Spas, Indoor Theaters, Auditoriums	-	-	C 5	-	C 6	P	P
Bowling Alleys, Skating Rinks, Dance and Pool Halls, Arcades	-	-	C 5	-	C 6	P	P
Outdoor Theaters, Amusement Parks, Carnivals, Fairs	-	-	-	-	C 6	P	P
Golf Courses, Tennis Courts	-	-	P	-	P	P	P
Commercial Business, Retail, and Services							
Aeronautical Businesses	-	-	P	P	P	P	P
General Retail Stores/Complexes, Restaurants, Convenient	-	-	P	-	P	P	P
General Offices, Executive Offices, Research Facilities	-	C 3	C 5	C 4	P	P	P
Vehicle Sales, Building and Lumber Materials, Food-Beverage	-	-	C 5	-	P	P	P
Appliance-Equipment Repair Facilities, Vehicle Wash	-	C 3	C 5	C 4	P	P	P
Shopping Malls and Centers, Home Improvement Centers	-	-	C 5	-	C 6	P	P
Banks, Financial Institutions	-	-	C 5	-	C 6	P	P
Gasoline Service Stations	-	-	P	-	P	P	P
Modular Self-Storage Facilities, Mini Storage Units	-	C 3	C 5	C 2	P	P	P
Personal Health Clinics, Well-Being and Care Facilities	-	-	C 5	-	P	P	P
Motels, Hotels, Bed and Breakfast	-	-	C 4	-	C 6	P	P
RV Parks, Camping Areas	-	-	C 4	-	P	P	P
Mass Transit Facility/Depot	-	-	C 5	P	C 6	P	P
Broadcast Studios	-	-	P	-	P	P	P
Commercial Industrial, Manufacturing & Warehousing							
Manufacturing Facilities, Industrial Plants, Warehousing	-	-	C 5	C 4	C 6	P	P
Warehouse, Wholesale, Distribution	-	C 3	C 5	C 4	C 6	P	P
Heavy Industrial/Manufacturing	-	-	C 5	-	C 6	P	P
Light Industrial/Manufacturing	-	C 3	C 5	C 4	C 6	P	P
Petroleum and Chemical Product Dealers-Bulk Storage	-	C 3	C 5	-	C 6	P	P
Mining-Sand, Gravel, Fill Dirt	-	-	C 1,2	-	C 1,2	C 1,2	P

(P) Permitted Land Use (C) Conditional Land Use (-) Prohibited Land Use **See Table Key on page 4-6*

Table Key
(P) Permitted Land Use: The associated land use groups are at a level of intensity or density, or location, which are not considered to present a significant risk to the safety of persons on the ground or to persons in aircraft over flying the proposed use.
(C) Conditional Land Use: The associated land use groups are at a level of intensity or density, or location, which is not considered to present a significant risk to the safety of persons on the ground or to persons in aircraft over flying the proposed use, contingent upon attainment of conditions presented (See Conditional Uses Below). The descriptions below are based on dwelling units per acre or number of persons per acre, not on the number of persons per building. 1 - Allowed only if use does not interfere with normal Airport operations (as defined by the FAA/South Carolina Aeronautics Commission). 2 - Prohibits uses that constitute a hazard to flight, including but not limited to tall physical objects, glare, dust, or other visual or electric interference to a pilot and aircraft, and uses that may attract hazardous wildlife. 3 - Low density up to 4 dwelling units per acre; or 10 persons per acre. 4 - Medium density 5-10 dwelling units per acre; or 10-25 persons per acre. 5 - High density more than 10 dwelling units per acre; or more than 25 persons per acre. 6 - Use intensity restricted to 100 or less persons per acre. 7 - Residential land uses permitted, with Residential Fair Disclosure required.
(-) Prohibited Land Use: The associated land use groups are at a level of intensity or density, or location, which presents a significant risk to the safety of persons on the ground or to persons in aircraft over flying the proposed use.

3. Other Land Use Requirements

a. New residential subdivisions and new residential uses located within McWhirter Field Aviation Overlay Land Use Zones A, B1, B2, C1, C2, and/or D require a Residential Fair Disclosure Statement in the purchase contract or rental agreement upon the selling or renting of a residential structure. The Residential Fair Disclosure Statement should state:

"This subject property and residential structure considered for purchase or rental located at [insert physical address] is located within 10,000 feet of McWhirter Field. Information regarding McWhirter Field can be received from Lancaster County."

b. Future applications made to Lancaster County requesting approval of manmade structures, which also require filing a notice with the FAA as per Part 77, §77.9, of Title 14 of the Code of Federal Regulations, or in successor federal regulations, shall first submit a FAA form 7460-1, "Notice of Proposed Construction or Alteration", to the

FAA for a review of impacts to airspace in the vicinity of the Airport, prior to placing of the request on the Planning Commission meeting agenda. If the FAA determines an adverse impact to the Airport's airspace may occur, the FAA decision should serve as governing height limitation for such a man-made structure.

F. NONCONFORMITIES

1. Nonconforming Uses – Regulations Not Retroactive

a. This regulation shall not be construed to require the alteration of any lot or removal, lowering, or other change or alteration of any structure or tree not conforming to the regulations as of the effective date of this ordinance, or otherwise interfere with the continuance of a nonconforming use. Nothing contained herein shall require any change in the construction or intended use of any property or structure for which the construction or alteration was started or for which a building permit was acquired prior to the effective date of this ordinance.

b. Notwithstanding the preceding provision of this section, the owner of any existing nonconforming structure or tree is hereby required to allow the installation, operation, and maintenance thereon of such markers and lights as shall be deemed necessary by the Lancaster County Airport Commission to indicate to the operators of aircraft in the vicinity of the airport the presence of such obstruction. Such markers and lights shall be installed, operated, and maintained at the expense of the McWhirter Field. Reference FAA Advisory Circular 70-7460-1K, or successor advisory circulars, for further guidance.

2. Existing Structures

Except as specifically provided in this section, it is not permissible for any person to engage in any activity that causes an increase in the extent of nonconformity of a nonconforming situation. Physical alteration of structures or the placement of new structures on open land is unlawful if they result in an increase in the total amount of space devoted to a nonconforming use or greater nonconformity with respect to land use limitation.

3. Abandoned Structures: Whenever the Administrator determines that a nonconforming structure has been abandoned or more than 80 percent torn down (or damaged more than 80 percent of the current County tax value), physically deteriorated, or decayed, no permit shall be granted that would allow such structure to otherwise deviate from the height and land use regulations.

4. Temporary Structures: Temporary structures constructed or erected incidental to a development, and solely used for the designated purpose, can only remain while needed and for a maximum of one year.

G. PERMIT REQUIREMENTS

1. Permits Required – Existing Uses

Before any existing use or structure may be replaced or substantially altered within any area of the McWhirter Field Aviation Overlay Land Use Zones Map, a permit shall be secured authorizing such replacement, change, or repair. No such permit shall be granted that would allow the establishment or creation of an airport hazard or permit a nonconforming use when the application for a permit is made. Except as indicated, all applications for a permit for replacement, change, or repair of an existing, structure shall be granted.

2. Permits Required – Future Uses

a. No change shall be made in the use of land or increasing or establishing a structure unless a permit has been applied for and granted by the Administrator. Each application shall indicate the purpose for which the permit is desired, with sufficient

particularity to permit it to be determined whether the resulting use or structure would conform to the regulations prescribed in this article.

b. No permit for a use inconsistent with the provisions of this ordinance shall be granted unless a variance has been approved in accordance with Chapter 9 Administration.

c. No building permits will be approved for the construction of any new structures within the McWhirter Field Aviation Overlay Land Use Zones Map established in Sections D.1 and E.1, and as depicted on the McWhirter Field Aviation Overlay Land Use Zones Map unless recommended by the Lancaster County Planning Department and Zoning Department.

No permit of any type shall be issued for any development, building permit, or activity subject to parcel areas underlying McWhirter Field Aviation Overlay Land Use Zones Map Zone A and Zone B1 herein defined, until Lancaster County has an opportunity to be granted an avigation easement by the property owner(s) in a form prescribed by the Lancaster County Airport Commission, and as recorded in a form acceptable to Lancaster County.

3. Permit Applications

A permit application, as required per Section 4.2.1.G.1, shall accompany a preliminary plat to contain the information as indicated in Chapter 9. A non-refundable application fee as per the current Lancaster County fee schedule shall be submitted with the permit application.

4. Review by County Airport Commission

No permit regulated by this ordinance shall be issued by the Administrator unless approved by the Lancaster County Airport Commission, or its designee.

Table 1: Compatible Land Uses

Zone Type		Top Elev.	General Characteristics of Permissible Base Zoning	Residential	Commercial	Industrial	Institutional	Recreational	Fuel Sales, Storage & Distribution	Wildlife Attractants
Airport Safety Zones	A	Tallest height of structure (or vegetation) does not penetrate Part 77 surfaces.	Airport related uses	None						
	B1& C2		Low density commercial uses low density industrial uses	Low density residential uses such as: large lot single family homes	Low density commercial uses such as: specialty shops, printing & shipping shops, banks, laundromats, vehicle repair shops, bakeries, hardware shops	Low density industrial uses such as: towing/vehicle storage, building supply yards, exterminators	None			
	C1		Low density residential uses(lots 1 acre or larger) low density commercial uses low density industrial uses low density institutional uses low density recreational uses	Low density residential uses such as: large lot single family homes	Low density commercial uses such as: specialty shops, printing & shipping shops, banks, laundromats, vehicle repair shops, bakeries, hardware shops	Low density industrial uses such as: towing/vehicle storage, building supply yards, exterminators	Low density institutional uses such as: single doctor offices, specialist offices, dentist/orthodonist offices, medical laboratories, urgent care facilities	Low density recreational uses such as: small gyms, dance studios	None	
Airport Land Use	B2		Low density residential uses low & medium density commercial uses low & medium density industrial uses low density institutional uses low & medium density recreational uses	Low density residential uses such as: single family homes	Low & medium density commercial uses such as: fast food restaurants, small cafés, small restaurants/bars, small & medium size offices, specialty shops, printing & shipping shops, banks, laundromats, vehicle repair shops, bakeries, hardware shops	Low & medium density industrial uses (without smoke/steam) such as: machine shops, general manufacturing, recycling centers, towing/vehicle storage, building supply yards, exterminators	Low density institutional uses such as: single doctor offices, specialist offices, dentist/orthodonist offices, medical laboratories, urgent care facilities	Low & medium density recreational uses such as: bowling alleys, skating rinks, tennis/swimming facilities, sports parks, gyms, dance studios	Small fueling facility uses such as: gas stations, truck fueling facilities	None
	D		All		Low & medium density commercial uses such as: fast food restaurants, small cafés, small restaurants/bars, small & medium size offices, specialty shops, printing & shipping shops, banks, laundromats, vehicle repair shops, bakeries, hardware shops	Low & medium density industrial uses (without smoke/steam) such as: machine shops, general manufacturing, recycling centers, towing/vehicle storage, building supply yards, exterminators	Low & medium density institutional uses such as: small libraries, small museums, small religious assemblies, single doctor offices, specialist offices, dentist/orthodonist offices, medical laboratories, urgent care facilities	Low & medium density recreational uses such as: bowling alleys, skating rinks, tennis/swimming facilities, sports parks, gyms, dance studios	All	None
	E		All							

Table 2: Incompatible Land Uses

Zone Type		Top Elev.	General Characteristics of Permissible Base Zoning	Residential	Commercial	Industrial	Institutional	Recreational	Fuel Sales, Storage & Distribution	Wildlife Attractants
Airport Safety Zones	A	Tallest height of structure (or vegetation) penetrates threshold siting surfaces (TSS)	Non-airport related uses	All						
	B1& C2		All residential uses and all high & ultra high density uses	High & ultra high density residential uses such as: large apartment complexes, mobile home parks, high rise condominiums	High & ultra high density commercial uses such as: big-box stores, large offices, multi-floor complexes, restaurants, shopping malls, nightclubs	High & ultra high density industrial uses such as: heavy manufacturing, mining/extraction, water treatment	High & ultra high density institutional uses, as well as any schools, hospitals, nursing homes, day-cares, libraries, museums,religious assemblies, municipal/county administration offices, public community centers, convention or performing arts centers	High & ultra high recreational uses such as: indoor theaters, small amusement parks, stadiums, large amusement parks, racetracks	All	All wildlife attractants such as: landfills, wastewater treatment plants, open mining operations with water bodies, construction soil/debris piles, detention ponds, fountains, or created wetlands
	C1		High & ultra high density uses	High & ultra high density residential uses such as: large apartment complexes, mobile home parks, high rise condominiums	High & ultra high density commercial uses such as: big-box stores, large offices, multi-floor complexes, restaurants, shopping malls, nightclubs	High & ultra high density industrial uses such as: heavy manufacturing, mining/extraction, water treatment	High & ultra high density institutional uses such as: colleges, universities,hospitals, community centers, large religious assemblies, convention or performing arts centers all schools, hospitals, nursing homes and day-cares	High & ultra high density recreational uses such as: indoor theaters, small amusement parks, stadiums, large amusement parks, racetracks	All	All wildlife attractants except detention ponds such as: landfills, wastewater treatment plants, open mining operations with water bodies, large construction soil/debris piles, fountains, or created wetlands
Airport Land Use	B2		High & ultra high density uses	High & ultra high density residential uses such as: large apartment complexes, mobile home parks, high rise condominiums	High & ultra high density commercial uses such as: big-box stores, large offices, multi-floor complexes, restaurants, shopping malls, nightclubs	High & ultra high density industrial uses such as: heavy manufacturing, mining/extraction, water treatment	High & ultra high density institutional uses such as: colleges, universities, hospitals, community centers, large religious assemblies, convention or performing arts centers all schools, hospitals, nursing homes and day-cares	High & ultra high density recreational uses such as: indoor theaters, small amusement parks, stadiums, large amusement parks, racetracks	Large fueling facilities such as: regional fuel distribution facilities	Landfills, water treatment facilities and open mining operations with water bodies
	D		None		Ultra high density uses such as: mega malls	Ultra high industrial uses and industrial uses that emit persistent, significantly large and dense plumes that may pose a hazard to aircraft such as: 1000 MW power plant with cooling towers	Ultra high density uses such as: universities, mega churches	Ultra high density recreational uses such as: stadiums, large amusement parks, racetracks	None	Landfills, water treatment facilities and open mining operations with water bodies
	E		None							

Table 3: Conditional Land Uses

Zone Type		Top Elev.	General Characteristics of Permissible Base Zoning	Residential	Commercial	Industrial	Institutional	Recreational	Fuel Sales, Storage & Distribution	Wildlife Attractants	Condition Summary
Airport Safety Zones	A	Tallest height of structure (or vegetation) falls between Part 77 surfaces and TSS	None	None							
	B1& C2		Medium density commercial uses medium density industrial uses	Medium density residential uses such as: apartment complexes, duplexes, triplexes, quadraplexes, townhomes	Medium density commercial uses such as: fast food restaurants, small cafés, small restaurants/bars, small & medium size offices	Medium density industrial uses such as: machine shops, general manufacturing, recycling centers	Low and medium density institutional uses except for: schools, hospitals, nursing homes, day-cares, libraries, museums,religious assemblies, municipal/county administration offices, public community centers, convention	Low & medium density recreational uses such as: bowling alleys, skating rinks, tennis/swimming facilities, sports parks, small gyms, dance studios	None	None	Part 77 Avigation Easement + Hold Harmless Agreement
	C1		Low density residential uses (lots less than 1 acre) medium density uses	Medium density residential uses such as: apartment complexes, duplexes, triplexes, quadraplexes, townhomes	Medium density commercial uses such as: fast food restaurants, small cafés, small restaurants/bars, small & medium size offices	Medium density industrial uses such as: machine shops, general manufacturing, recycling centers	Medium density institutional uses such as: small libraries, small museums, small religious assemblies	Medium density recreational uses such as: bowling alleys, skating rinks, tennis/swimming facilities, sports parks	None	Detention ponds	Avigation Easement if necessary for current/planned instrument approaches + Disclosure Letter
Airport Land Use	B2		Medium density residential uses medium density institutional uses	Medium density residential uses such as: apartment complexes, duplexes, triplexes, quadraplexes, townhomes	None	None	Medium density institutional uses such as: small libraries, small museums, small religious assemblies	None	Medium size fueling facilities such as: local fuel distribution facilities	All wildlife attractants except for landfills, water treatment facilities and open mining operations with water bodies	Disclosure Letter
	D		All		High density commercial uses such as: restaurants, shopping malls, nightclubs	High density industrial uses (with no or little smoke/steam emissions) such as: heavy manufacturing	High density institutional uses such as: colleges, hospitals, community centers, large religious assemblies, convention or performing arts centers	High density recreational uses such as: indoor theaters, small amusement parks	None	All wildlife attractants except for landfills, water treatment facilities and open mining operations with water bodies	Flight path modification plan, if needed
	E		None								

(Ord. No. 2019-1620, 12.9.19; Ord. No. 2020-1645, 2.24.20)

4.2.2 CAROLINA HEELSPLITTER OVERLAY DISTRICT (CHO)

The Carolina Heelsplitter Overlay District is hereby established. The natural habitat of the Carolina Heelsplitter, which is a federally endangered species, is in waters that are cool, clean, and well-oxygenated. Stable, silt free stream bottoms appear to be critical to the continuation of the species. Typically, stable areas occur where the stream banks are well-vegetated with trees and shrubs. Similar to other freshwater mussels, the Carolina Heelsplitter feeds by siphoning and filtering food particles from the water in the creek, stream, or river in which they are located.

The decline in the numbers of Carolina Heelsplitter is related to changes in their natural environment. These changes can occur from clear-cutting trees and other vegetation near creek, stream, and river banks which increases erosion and silt in these water bodies. Some activities that can cause this to occur are residential, commercial, and industrial development and road construction and maintenance. Additionally, the discharge of pollutants into these water bodies, habitat alterations from impoundments and uncontrolled stormwater, as well as, other man-made changes can negatively impact the natural habitat of the Carolina Heelsplitter. Any one of these activities or a combination of these activities can negatively impact the Carolina Heelsplitter's natural environment, which has contributed to the decline of the species. Additionally, a number of studies have shown that stream habitat and water quality degradation occurs with increased coverage by impervious surfaces in a watershed.

This overlay district is created to help protect the natural habitat of the Carolina Heelsplitter and, therefore, maintain the existing populations of Carolina Heelsplitter located in Lancaster County.

A. REGULATIONS THAT APPLY

1. Basin means the Six Mile Creek drainage basin, as designated by the United States Geologic Survey (USGS), and any successor entity, hydrographic unit number 03050103030010.
2. Best management practices (BMPs) include but are not limited to practices defined in the South Carolina Department of Health and Environmental Control (SCDHEC) Stormwater Management BMP Handbook.
3. Carolina Heelsplitter Overlay District means an overlay district that imposes certain restrictions and limitations on development in the basin.
4. Development means the creation of impervious surfaces or any master planned development.
5. Impervious surface means a hard surface which slows or prevents water from infiltrating the soil and/or causes water to run off surface more rapidly or in greater quantities than under natural conditions. Impervious surfaces include, but are not limited to, asphalt and concrete surfaces, building footprints, sidewalks, rooftops, patios, pools, sport surfaces, garages, carports, sheds, driveways, parking lots, streets, and compacted roadways. Those surfaces excluded from the measurement of impervious surface would include, but are not limited to, landscaped areas, grass fields, golf courses, playgrounds, agricultural fields, and non-compacted roads. Advanced building materials such as a porous concrete and porous asphalt, under laid with sand or similar materials to match infiltration characteristics of surrounding lands, would also be considered porous.
6. Intermittent streams are streams that generally have defined natural watercourses that do not flow year-round, but beyond periods of rainfall and with greater frequency than similarly located ephemeral streams. Designation of a stream as intermittent shall be confirmed by using stream delineation techniques as outlined in the document titled "U.S. Army Corps of Engineers Jurisdictional Determination Guidebook". For the purposes, hereof, the term "intermittent stream" shall not include any waters that the U.S. Army Corps of Engineers has determined or shall determine are not subject to its jurisdiction.

7. Land development means development activities which cause a change in land characteristics through redevelopment, construction, subdivision into parcels, condominium complexes, apartment complexes, commercial parks, shopping centers, industrial parks, manufactured home parks, or similar developments for sale, lease, or any combination of owner and rental characteristics.

8. Perennial streams means, generally, those blue lined streams indicated on a USGS 1:24,000 topographical map. Designation of a stream as perennial shall be confirmed by using stream delineation techniques as outlined in the document titled "U.S. Army Corps of Engineers Jurisdictional Determination Guidebook". For the purposes, hereof, the term "perennial stream" shall not include any waters that the U.S. Army Corps of Engineers has determined or shall determine are not subject to its jurisdiction.

9. Riparian buffer means an area of natural vegetation that is adjacent to a body of water and which is managed to maintain the integrity of stream channels and shorelines, to reduce the impact of upland sources of pollution by trapping, filtering, and converting sediments, nutrients, and other chemicals, and to supply food, cover, and thermal protection to fish and other wildlife.

10. Riparian buffer impact means any activity within 200 feet of any perennial stream or 100 feet of any intermittent stream, excluding agricultural practices, except clear cutting and grading, which removed vegetation with the riparian buffer, as defined in these regulations, or the prevention of re-growth of the natural vegetation within these areas. Where riparian buffers have been impacted due to agricultural practices, these areas will be expressly allowed to revert to their natural state in the event of any transition of land use.

B. RESTRICTIONS AND LIMITATIONS

1. When the development involves either the creation of less than 8,000 square feet of new impervious surface (gravel roads located outside of the riparian buffer are excluded from this calculation) or land development project with 10 percent or less impervious surface, and existing riparian buffers are not disturbed, then the development may proceed as of right, subject to:

   a. Adherence to ordinary requirements for development approval or permitting;

   b. Maintenance of a native forested buffer, and no disturbance of the natural vegetation within a distance of 200 feet of the edge-of-bank for perennial streams or within one hundred feet (100') of any intermittent stream within the basin. The 100-foot or 200-foot native forested buffer shall be measured from the top of the bank on either side of the intermittent/perennial creek or stream and wraps around the head of the stream at the intermittent/ephemeral breakpoint.

   c. A fence shall be allowed in the buffer areas, as long as the fence is either part of an agricultural practice or does not impede the re-growth of a natural vegetation.

   d. Curb and gutter are not required within the CHO. The use of grass swale, etc. is encouraged, and the use of sidewalks is considered optional.

   e. A pond shall require a 100-foot riparian buffer only if it is an integral part of a stream and the stream section immediately below the pond is classified as perennial. Other types of ponds, such as catch basis and stormwater ponds which only drain out intermittently, shall not require a riparian buffer.

2. When the development involves the creation of 8,000 or more square feet of new impervious surface (gravel roads located outside of the riparian buffer are excluded from this calculation) or any land development project with more than 10 percent impervious surface, or disturbs existing riparian buffers, then the development may proceed, subject to:

   a. Adherence to ordinary requirements for development approval or permitting;

b. Maintenance of a native forested buffer, and no disturbance of the natural vegetation within a distance of 200 feet of the edge-of-bank for perennial streams or within 100 feet of any intermittent stream within the basin. The 100-foot or 200-foot native forested buffer shall be measured from the top of the bank on either side of the intermittent/perennial creek or stream and wraps around the head of the stream at the intermittent/ephemeral breakpoint.

c. A fence shall be allowed in the buffer areas, as long as the fence is either part of an agricultural practice or does not impede the re-growth of a natural vegetation.

d. Curb and gutter are not required within the CHO. The use of grass swale, etc. is encouraged, and the use of sidewalks is considered optional.

e. A pond shall require a 100-foot (100') riparian buffer only if it is an integral part of a stream and the stream section immediately below the pond is classified as perennial. Other types of ponds, such as catch basins and stormwater ponds which only drain out intermittently, shall not require a riparian buffer.

f. The purchase of credits from the Carolina Heelsplitter Conservation Bank shall be required. Purchase of these credits shall be in accordance with criteria agreed to by the Planning Commission and the United States Fish and Wildlife Service as noted in Section B, Restrictions and Limitations. Credit discounts can be given to projects at the discretion of the United States Fish and Wildlife Service. Examples of activities which may qualify for discounts are: pre and post construction stormwater BMPs planned for and/or implemented in excess of SCDHEC permit requirements, projects with minimal site grading, projects incorporating low impact development practices, and projects with total impervious surface of less than 20 percent. This determination shall be made by the United States Fish and Wildlife Service on a case by case basis. The authority to determine activities which may qualify for credit discounts can be delegated from the United States Fish and Wildlife Service to the County's planning staff with appropriate guidance provided. The purchase of credits is intended to offset water quality and hydrologic impacts to the Carolina Heelsplitter and its habitat. These credits shall be purchased when the grading permit for the project is obtained from SCDHEC, subsequent to site plan or subdivision plat approval by Lancaster County. Proof that the required credits were purchased at the time the grading permits were issued shall be provided to Lancaster County prior to any building permits being issued from the County. This shall be done by providing the County a credit affidavit dated on or before the issuance of the grading permit by SCDHEC. If the credits were not purchased at the time the grading permit was issued, then a 20 percent per year penalty shall be added to the cost of the credits for the project. For example, if two credits were required for a project and the cost of these original two credits was not paid to the mitigation bank at the time of the issuance of the grading permits, then the new payment to the mitigation bank would be the cost of the two original credits plus the cost of the original two credits multiplied by 20 percent. The penalty shall be prorated on a monthly basis; and

g. In the discretion of the Planning Commission, and in accordance with criteria agreed to by the Planning Commission and United States Fish and Wildlife Service, review by the Service office in Charleston, South Carolina, for compliance with the Carolina Heelsplitter Conservation Bank Program.

3. The CHO is defined by the Six Mile Creek watershed boundary, not property (parcel) boundaries. This means a few parcels located within the overlay district could have a portion of the parcel drain within the Six Mile Creek watershed boundary and another portion of the same parcel drain outside the Six Mile Creek watershed boundary. When this happens, the portion of the parcel which drains outside the Six Mile Creek watershed shall not be subject to the terms of this overlay district.

C. RESTRICTIONS AND LIMITATIONS EXCLUSIONS

The purchase of credits from the Carolina Heelsplitter Conservation Bank requirement does not apply to the installation, maintenance, or operation of water and sewer services by Lancaster County Water and Sewer District. Although not subject to the purchase of credits, all projects conducted by the Lancaster County Water and Sewer District are required to be submitted to the U. S. Fish and Wildlife Service for review and assurance of appropriate BMPs and other applicable regulations as noted in Section 4.2.2.A.

4.3 CORRIDOR OVERLAYS

4.3.1 CAROLINA THREAD TRAIL OVERLAY DISTRICT (CTTO)

The Carolina Thread Trail Overlay District is hereby established and is subject to the following general provisions:

A. PURPOSE AND INTENT

The Carolina Thread Trail Overlay District is established to preserve and enhance trail corridors identified in the Lancaster County Carolina Thread Trail Master Plan adopted by the County on October 24, 2011. The Carolina Tread Trail is a 15-county regional trail network in North and South Carolina that will connect 2.3 million residents to local and regional destinations. The Lancaster County Carolina Thread Trail Master Plan identifies four categories for greenway benefits: 1) Connecting communities by providing neighborhood connections, connecting communities to nature, and building regional partnerships; 2) Health benefits through encouraging physical activity and relieving stress and improving psychological health; 3) Economic impacts of increasing property values, attracting tourism, and fostering new businesses and retaining nearby businesses; and 4) Environmental benefits through preserving and protecting natural and agricultural land uses and improving water quality.

B. DISTRICT BOUNDARIES AND APPLICABILITY

The Carolina Thread Trail Overlay District boundaries include all parcels that fall within the trail corridors identified on the Lancaster County Carolina Thread Trail Master Plan. These corridors are identified along rivers, roads, and abandoned rail corridors. The general requirements and development standards are applicable to all parcels for major land subdivision and development along the trail corridors in the Lancaster County Carolina Thread Trail Master Plan.

C. GENERAL REQUIREMENTS AND DEVELOPMENT STANDARDS

Every subdivider developing a major subdivision of land in the Carolina Thread Trail Overlay District shall:

1. Dedicate a portion of such land, as set forth in this ordinance, to be used for public use. (See Code of Laws of South Carolina 5-23-43.)
2. Additionally, construct a Pedestrian Trail in the subdivision. Minimum design standards for the construction of a hard surface Pedestrian Trail are shown in Appendix C, MSSD. A soft surface trail may be considered depending upon location, topography and need. The amount of land required for the trail, including right-of-way, can be utilized to meet the amenity/open space requirements.
3. A density bonus of up to 10 percent may be considered by the Planning Commission and County Council when the dedicated land is proposed to be used by the community at large in an effort to meet identified County-wide recreational needs.

D. EXCEPTIONS AND NON-CONFORMING SITUATIONS

Exceptions to the Carolina Thread Trail Overlay District General Requirements and Development Standards shall be considered by the Administrator upon consideration of

topographic conditions that necessitates a reduction in the perpetual easement while still achieving the purpose and intent of the Lancaster County Carolina Thread Trail Overlay District.

Other exemptions shall include the following:

1. The combination or recombination of portions of previously subdivided and recorded lots where the total number of lots is not increased, the resultant lots are equal to or exceed the Unified Development Ordinance requirements of the County, and no new street construction is involved.
2. The division of land into parcels greater than 10 acres in size where no new street construction is involved.
3. The public acquisition by purchase of strips of land for the widening or opening of streets.
4. The conveyance to lineal descendants for the purpose of dividing real estate among said lineal descendants. At such time that any lineal descendants or their successors in interest develop or build upon their respective property, the property must conform in all respects to the regulations of Lancaster County.

4.3.2 HIGHWAY CORRIDOR OVERLAY DISTRICT (HCO)

The Highway Corridor Overlay District is hereby established and is subject to the following general provisions:

A. PURPOSE AND INTENT

The Highway Corridor Overlay District is established to preserve and enhance corridors that serve as major gateways leading to, from, and within Lancaster County. As both commercial and residential land uses exist along such corridors, there is a desire of the residents of Lancaster County to provide standards relative to connectivity, aesthetic appearance, and safety along major gateways. The land use recommendations and design requirements contained in the Highway Corridor Overlay District are the result of a community-wide effort. As such, the intent of this district is to provide unified land development regulations that promote a sense of place and create consistency along significant corridors by improving the visual character of adjacent development. Appendix B, Highway Corridor Overlay District Supplementary Diagrams is attached as a reference for the vision and intent of the HCO.

B. DISTRICT BOUNDARIES AND APPLICABILITY

The Highway Corridor Overlay District applies to the following:

1. The County Council shall designate the property that is subject to the provisions of the Highway Corridor Overlay District by rezoning the properties in accordance with the procedures and requirements applicable to map amendments. In general, for those highways identified for Highway Corridor Overlay District status, the district designation shall apply to all parcels fronting on or within 1,000 feet of the right-of-way of the designated highway. Only the following highways are designated as a Highway Corridor Overlay District:
   a. US Highway 521 from SC Highway 75 (Waxhaw Highway) northward to the North/South Carolina state line; and
   b. SC Highway 160 from US Highway 521 westward to the York/Lancaster County line.
2. The Highway Corridor Overlay District development regulations, as set forth in the Highway Corridor Overlay District, apply to all uses on the properties zoned Highway Corridor Overlay District except for single family housing as identified in Section 2.5, Permitted Uses. The development regulations applicable to single family housing are the development regulations of the underlying zoning district.
3. Any property within the Highway Corridor Overlay District zoned and used for industrial use, LI and HI, shall be subject to the provisions set forth in Section 4.3.2.N; and

4. This district shall also apply to all shared access easements and/or cross-access easements located within the areas defined in Section 4.3.2.B.1, including, but not limited to, those that may be used to access any parcel or parcels beyond the boundaries of this district.

C. PERMITTED USES

As an overlay, the Highway Corridor Overlay District supplements standards established elsewhere in the UDO. Any use permitted in the underlying zoning district, set forth in Chapter 2 of the UDO, shall also be permitted in the Highway Corridor Overlay District provided it complies with the provisions of the Highway Corridor Overlay District.

D. EXCEPTIONS AND NON-CONFORMING SITUATIONS

Any property zoned and used for a single family residential use, including the single family residential portion of a property zoned Planned Development District (PDD), shall be exempt from the development standards of the Highway Corridor Overlay District. When a parcel has a vested right in effect, that parcel may be exempt from certain provisions of the Highway Corridor Overlay District, as outlined in Chapter 9 of the UDO. The development standards of this overlay district shall apply to all other properties within the district boundaries as outlined in Section 4.3.2.B.

E. DESIGN REVIEW

All development design and plan reviews, as required by the UDO, shall apply to the Highway Corridor Overlay District.

F. GENERAL REQUIREMENTS AND DEVELOPMENT STANDARDS

1. **Building Placement:** All buildings shall front onto a public or private street, or share a frontage line with a square or other similar common open space. The front facade of buildings shall be generally parallel to front property lines when placed along the corridor right-of-way. The following shall also apply:

   a. In general, the setback requirements set forth in Chapter 2 and Chapter 3 of the UDO shall apply. When fronting the corridor right-of-way, the front setback for buildings with a commercial district use may be reduced to a minimum of 25 feet. For commercial developments that were platted prior to the establishment of the Highway Corridor Overlay District, common setback flexibility will be considered by the Technical Review Committee (TRC).

   b. When fronting the corridor right-of-way, buildings shall have access from the front and rear of the building.

   c. The development of retail commercial centers or villages is favorable over commercial "strip development" in the Highway Corridor Overlay District.

2. **Building Height:** Maximum building height shall not exceed that permitted in the underlying zoning district, set forth in Chapter 2 and Chapter 3, of the UDO.

3. **Building Vernacular:** Variation in architecture and materials is required. There shall be no large expanse of blank exterior walls along the corridor. Variation in exterior walls may be achieved through the use of windows, projections, recesses, columns, horizontal and vertical offsets, awnings, canopies, or other architectural features. Rooflines of buildings adjacent to the corridor shall also be varied to add interest and complement the character of surrounding development and neighborhoods. Variation in rooflines may be achieved through the use of gables, eaves, parapets, cupolas, or other architectural features.

4. **Materials:**

   a. Buildings, signs, walls, and other structures within the Highway Corridor Overlay District shall be constructed using quality finish materials (i.e., brick, wood, masonry,

stone, concrete siding, or stucco). In general, the use of vinyl, tin, metal, and masonry block (except split face/decorative masonry) shall be prohibited on the exterior walls of any building located within this district. Metal is permissible if in combination with other building materials for use as trim, windows, doors, roofing, other architectural elements, and signs. All sides of the building shall comply with this requirement except any side of a building that is not visible from any point on an adjoining road right-of-way. Sides of the building that are screened with landscaping, a fence, or some combination of the two shall be considered to be visible from an adjoining street and must comply with the requirements of the Highway Corridor Overlay District.

b. Fencing shall be of durable construction using quality material (i.e., brick, stone, other masonry, wood, metal, decorative vinyl, or any combination thereof). The finished side of the fence shall face the corridor right-of-way or other adjacent property. Chain link, welded or woven wire, and other similar fencing are not permitted in the Highway Corridor Overlay District, unless their use is for sports fields and recreational complexes. In such conditions, the fencing shall be color coated with a manufacturer applied finish. Finish color must be approved by the Technical Review Committee. Such fencing may also be permitted for temporary use during construction and site development provided it is removed or replaced with a compliant material upon completion of construction. This requirement is for aesthetic purposes only and is not associated with building code requirements or standards.

5. Sidewalks and Pedestrian Amenities:

a. Sidewalks and Connectivity:

i. At a minimum, sidewalks shall comply with the construction requirements set forth in Appendix C of the UDO;

ii. Sidewalks shall be located to allow pedestrians to safely move from their vehicles to the building;

iii. Sidewalks shall connect to existing pedestrian circulation of adjacent parcels where not restricted by topography or other existing site features;

iv. When adjacent to a residential use district, sidewalks shall be provided to allow pedestrian access to and from a commercial retail development;

v. Sidewalks shall be required on both sides of public or private streets within a commercial retail development.

b. Other Pedestrian Amenities:

All retail commercial development or use with a gross indoor floor area in excess of 40,000 square feet shall provide improved common open space for use by patrons. Such common open space shall be a minimum of 500 square feet in area and may include squares, plazas, greens, or other similar spaces. The following shall also apply:

i. "Improved" shall mean cleared of underbrush and debris, accessible to pedestrians, and shall include one or more of the following: landscaping, walls, fences, walks or similar paved surfaces, fountains, statues, common lawns or greens, tables and chairs, benches or other seating, water fountains, litter and recycling receptacles, playground equipment, or other similar furnishings and amenities;

ii. Such spaces shall include canopy trees to provide shade. At installation, a canopy tree shall have a minimum caliper of 2.5 inches when measured 6 inches above ground with a minimum height of 10-12 feet;

iii. Such spaces shall be accessible from sidewalks and other pedestrian circulation within the development; and

iv. The property owners, occupants, and tenants or their agents shall be jointly and severally responsible for the maintenance and upkeep of all such common open space. All such areas shall be kept free of litter and debris and shall generally be maintained with a neat and orderly appearance.

G. PARKING AND VEHICULAR ACCESS

1. **Off-Street Parking:** For buildings fronting on the corridor, off-street surface parking shall be located primarily to the rear of the building it serves. Side yard parking is permissible and shall occupy no more than 45 percent of the principle corridor frontage line. The following shall also apply:

   a. Where dimensions or topographical constraints of existing parcels restrict the location of off-street parking to the rear of the building it serves, the restrictions on side yard parking may be modified, on a case-by-case basis, by the Administrator;

   b. Uninterrupted areas of parking areas shall be limited in size. Parking areas with more than 20 space[s] shall be broken by buildings and/or landscape features as outlined in Section 4.3.2.K.6; and

   c. Parking areas shall be designed to allow pedestrians to safely move from their vehicles to the building.

2. **On-Street Parking:** On-street parking is not permitted on the corridor or other street. On-street parking is permitted on private streets within a retail commercial development where adequate space for parking and maneuvering is provided outside of travel lanes. On-street parking shall comply with the requirements set forth in the latest edition of the South Carolina Department of Transportation (SCDOT) Access and Roadside Management Standards (ARMS) Manual.

3. **Parking Count and Dimension Requirements:** The number of parking spaces required and required parking space dimensions shall comply with the provisions set forth in Chapter 7 of the UDO.

4. **Off-Street Loading and Unloading Areas:** Off-street loading and unloading areas shall comply with the provisions set forth in Chapter 7 and shall be screened from view from all residential use districts and public rights-of-way using an opaque screen.

5. **Driveway and Internal Street Standards:**

   a. All newly constructed streets within the Highway Corridor Overlay District shall meet the construction standards of Chapters 6 and Appendix C of the UDO. The minimum right-of-way and pavement widths shall comply with the provisions set forth in Chapter 6 and Appendix C of the Lancaster County Code, as amended. Where applicable, such streets shall also comply with the standards established by SCDOT;

   b. Private and public roads are as defined in Chapter 6 and Chapter 10 of the UDO;

   c. The minimum spacing between driveway accesses to the corridor shall comply with the provisions set forth in Section 4.3.2.G;

   d. Curb and gutter shall be required on all newly constructed private streets, drives, and parking areas within the Highway Corridor Overlay District and shall comply with the requirements set forth in Chapter 6 of the UDO; and

   e. Interconnectivity between adjacent parcels is required when there is not a conflict in use and is subject to the provisions set forth in Section 4.3.2.G.

H. SIGNS

In general, signage within the Highway Corridor Overlay District shall comply with the provisions set forth in Chapter 7 of the UDO. The following additional regulations shall also apply specifically to this overlay district:

1. **Permitted Signs:** All signs that are permitted within the Highway Corridor Overlay District shall complement the surrounding buildings in material and architectural vernacular. The following signs are permitted in the Highway Corridor Overlay District:

   a. Free Standing Ground Monument Signs: All ground monument signs shall have a setback requirement of 5 feet from any property line or right-of-way line. Ground monument signs shall not project into any street or highway right-of-way. No more than one ground monument sign shall be permitted per lot and may contain a sign face on no more than two sides;

   b. Wall Signs: Wall signs attached flat against a wall shall not extend more than 18 inches from a wall. When a wall sign extends 2 or more inches from a wall it shall be a minimum of 8 feet above any sidewalk to provide for pedestrian clearance;

   c. Projecting Signs: A projecting sign perpendicular to the wall of a building may be substituted for a wall sign provided it is a minimum of 8 feet above any sidewalk to provide for pedestrian clearance and projects no more than 6 feet from the wall on which it is mounted; and

   d. Canopy or Awning Signs: A canopy or awning sign shall not be placed higher than the bottom of the second floor or higher than the roofline of single-story structures. A canopy or awning sign shall be a minimum of 8 feet above any sidewalk or other pavement to provide for pedestrian clearance.

2. **Commercial Retail Developments and Centers:** All retail commercial development or use with two or more businesses shall be allowed no more than one ground monument sign. Signage for individual businesses shall be consolidated onto one such ground monument. The following shall also apply:

   a. Where such a development fronts two or more streets with more than 500 feet of frontage on each, additional ground monument signs may be permitted provided no more than one is located on each street;

   b. Directional and wayfinding signs within a retail commercial development or center shall be grouped and shall be consistent in size, color, ornamentation, and materials, and shall complement the surrounding buildings; and

   c. For such developments, a ground monument sign shall not exceed a height of 10 feet. Where such a development has a gross indoor floor area in excess of 40,000 square feet, the maximum height may be increased to no more than 20 feet for a ground monument sign.

3. **Size and Height of Signs:** The maximum size of any sign shall be as established in Chapter 7, Signs, of the UDO. A sign for any individual nonresidential use shall not exceed a height of 10 feet along the corridor and a height of 4 feet along any secondary street. A sign for a single family development shall not exceed a height of 10 feet along any street. For a multifamily residential or attached single family development, a sign shall not exceed 6 feet in height along the corridor and 4 feet along any secondary street. The height of all signs shall be measured from the lowest adjacent grade at the base of the sign.

4. **Prohibited Signs:** The following signs, in addition to those prohibited in Chapter 7 of the UDO, are prohibited in the Highway Corridor Overlay District:

   a. Pylon signs;

b. Flashing and pulsating signs;

c. Signs imitating warning signals;

d. Painted or handwritten signs;

e. Off-premise signs;

f. Animated signs;

g. Beacons;

h. Neon gas tubing or similar signs;

i. Inflatable signs and tethered balloons;

j. Banners in non-residential districts;

k. Illuminated tubing or string of lights typically used for outlining property lines, open sales areas, rooflines, doors, windows, or wall edges of any building, except for "holiday season" lights as permitted in Section 4.3.2.J.7;

l. Signs that move or give the appearance of moving, including but not limited to feather signs, pennants, inflatable figures, streamers, and other signs which flutter, undulate, swing, rotate, oscillate, or otherwise move by natural or artificial means;

m. Reader boards, digital message boards (including LED screens), or other similar commercial electronic variable message signs whose static message or copy change more than once every 20 seconds, and the change sequence must be accomplished within an interval of two seconds or less. Such signs shall not include animated, continuous, moving, rolling, or scrolling messages. Fluttering, blinking, or flashing elements including video is prohibited. In general, signs displaying continuous moving copy or image, whether digital or analog, shall not be permitted. In addition, such signs shall not be used for paid advertising. Note: Signs using Light-Emitting Diode (LED) illumination and/or displays are permissible provided they are not attached to a building and the copy or image being displayed remains static or changes no more than once every 20 seconds. This section only applies to the use of reader boards and LED displays on permitted signs. The regulations for outdoor advertising signs (billboards) are outlined in Chapter 5 and Chapter 7 in the UDO;

n. Any sign placed within any public/private rights-of-way or easement;

o. Any sign that obstructs or impedes traffic safety or obscures traffic signals, signs, or other similar traffic safety devices. Signs shall not obstruct the view of motorists using any street, driveway, parking aisles, or the approach to any street intersection so as to cause a traffic safety hazard. Any sight obstruction determined by the County or SCDOT shall be corrected immediately;

p. Any sign which exhibits statements, words, or pictures that are obscene in nature;

q. Any sign which is not permitted, abandoned signs, or signs which being structurally unsafe or hazardous; and

r. Any sign placed with the primary purpose of providing a sign not otherwise allowed by Section 4.3.2.I.4.a.

5. Temporary Signs: The following temporary signs are permitted provided their use complies with the requirements set forth in Chapter 7 of the UDO, including duration of display and removal regulations:

a. Real estate signs;

b. Construction site identification signs;

c. Grand opening, going out of business signs, or similar;

d. Holiday signs;

e. Special event signs;

f. Roadside stand signs;

g. Signs for on-site contractors;

h. Banners for religious, charitable, civic, fraternal, or similar organizations;

i. Other temporary signs as may be restricted by Chapter 7 of the UDO.

6. **Sign Illumination:** Illuminated signs, including those with internal illumination, are permitted and shall be placed and shielded so that glare from the sign does not adversely affect any adjacent property, residential use district, cause glare hazardous to pedestrians, or interfere with the operation of a vehicle on any street right-of-way. Signs shall not have light-reflecting backgrounds or letters. The intensity of light shall not exceed 20 foot candles at any point on the sign face.

7. **Sign Landscaping:** All ground monument signs shall have, at a minimum, landscaping in accordance with the standards set forth in Chapter 7 of the UDO. Landscaping shall be integral with other landscaped areas as required by this district. In general, minimum plant sizes at installation shall also comply with the Highway Corridor Overlay District. However, landscaping shall not obstruct the view of a sign. All landscaping at the base of a sign shall comply with Section 4.3.2.K.1.a.

I. LIGHTING

In general, lighting within the Highway Corridor Overlay District shall comply with the provisions set forth in Chapter 7 of the UDO. The purpose of this section is to provide aesthetic regulations and to assure that exterior lights are shielded and do not cast direct light beyond a property line. Streets, driveways, parking areas, sidewalks, and building entrances shall be lighted in order to contribute to the security of a property and to facilitate the safe passage of persons using such streets, driveways, sidewalks, and parking areas after dark. However, measures shall be provided to limit the amount of ambient light perceptible from adjacent properties and glare that may impair the vision of motorists. The following shall also apply:

1. Light intensity shall not exceed 30 foot candles at any point in the Highway Corridor Overlay District. Light intensity shall not exceed 2 foot candles at a property line adjacent to a street right-of-way or non-residential use and shall not exceed 0.5 foot candle at a property line adjacent to a residential use district. A greater light intensity may be permitted for competitive sports fields during competitive play provided the light intensity does not exceed that set forth by the regulating athletic agency;

2. The following light intensities measured in foot candles (fc) shall also apply:

a. Parking Lots: 0.6fc Minimum/2.4fc Average/10fc Maximum;

b. Walkways and Driveways: 0.2fc Minimum/1.0fc Average/10fc Maximum;

c. Landscape and Decorative: 0fc Minimum/0.5fc Average/5.0fc Maximum; and

d. Outdoor Display of Merchandise: 0.5fc Minimum/1.0fc Average/15fc Maximum;

3. Signalized intersections shall be limited to locations where significant collector streets connect with the corridor. For example, along US Highway 521 such an intersection is at Possum Hollow Road, and along SC Highway 160 such an intersection is at Calvin Hall Road. Where a Traffic Impact Analysis requires a new signalized intersection, the standard

metal or concrete poles as set forth by SCDOT shall be installed. This requirement shall also apply to an existing signalized intersection where additional lanes and signalization changes are required. All poles shall be professionally painted black. Wood poles are only permissible for temporary use during repairs and installation. Complete cost of the installation shall be paid by the developer. In addition, the County may require the developer to furnish a letter of credit, cash escrow, or other guarantee acceptable to the County to cover future repairs and replacement;

4. All fixtures shall be consistent throughout a site in size, color, ornamentation, and materials and shall complement the surrounding buildings. Each fixture shall be a down-directional lighting fixture with its source being recessed within an opaque housing. All light fixtures shall be located, aimed, or shielded as to limit the amount of ambient light perceptible from adjacent properties and street rights-of-way. The color of all such light sources shall be white;

5. Street lighting, as required by Chapter 7 of the UDO, shall comply with SCDOT requirements where applicable. All street lights shall be consistent along the corridor and throughout a site. Such fixtures shall be shielded and down-directional except that unshielded decorative street lamps featuring globes or glass panes are permissible if designed to diffuse light and shall have caps to direct light downward. The color of all such light sources shall be limited to white or as required by SCDOT;

6. All wiring and service connections for all lighting must be underground. Likewise, the back of all signs shall have a finished appearance unless it is screened with an opaque screen and is not visible from any residential use or street right-of-way;

7. Holiday lighting displays, lighting for approved temporary events, and directional lighting during construction are exempt from these requirements provided they do not exceed the maximum foot candles and do not negatively impact safety;

8. Fixture heights shall not exceed 18 feet except in areas where the total number of parking spaces exceed 100 spaces. In such cases, fixtures shall not exceed 25 feet provided they are limited to the central areas of the parking area. A luminary located within 50 feet of a residential use district shall not exceed a height of 12 feet. Fixtures along the primary vehicular/pedestrian streets shall not exceed a height of 18 feet;

9. Outdoor lighting installed on canopies or drive-thru facilities are permitted with a maximum foot candle reading of 20 foot candles under any illuminated area. Fixtures located under a building canopy shall be flush-mount with a flat lens, shall use diffusers, and be shielded;

10. Buildings shall be safely illuminated at entry/exit locations and shall be illuminated using shielded lighting or off-building lighting that does not generate glare or otherwise allow the light to be viewed directly from an adjacent property. Building walls may be illuminated and may include up-lighting, provided such fixtures comply with Section I.2 above. However, no building illumination shall cause the site to exceed maximum light intensity limitation;

11. Landscape lighting may include up-lighting for accent, provided such fixtures comply with Section I.2 above. However, no landscaping illumination shall cause the site to exceed maximum light intensity limitation, and such fixtures shall be located, aimed, or shielded as to limit the amount of ambient light perceptible from adjacent properties and street right-of-way;

12. Security lighting shall be provided, particularly at pedestrian walkways. Motion detector security lights shall be exempt from the foot candle requirements of this item provided such lights are normally "off," and are limited to being "on" for four minutes or less when motion is detected;

13. Flood lights shall be permissible for security, loading areas, and other such applications provided they are focused toward the primary building or space intended to be illuminated.

Likewise, they may be aimed at no higher than a 45 degree angle, and shall be generally aimed or shielded as to limit the amount of ambient light perceptible from adjacent properties and street right-of-way;

14. The following lighting fixtures are prohibited: non-directional lighting fixtures, searchlights, laser source lights, flashing lights, or any similar high-intensity light used to attract attention, except for use during emergencies by authorized emergency, police, and fire personnel;

15. Any damaged, broken, or malfunctioning light fixture or pole shall be repaired or replaced immediately; and

16. A professionally sealed site lighting plan shall be submitted as part of a County site plan review. The County may adjust the standards for the maximum illumination at a property line if it is determined that the design and nature of the adjacent use creates a need to either reduce or increase the maximum illumination. Likewise, the Administrator may require changes to fixtures to bring the lighting levels into compliance, or as necessary to reduce impact on adjacent properties and street right-of-way.

J. LANDSCAPING, BUFFER YARD, AND SCREENING REQUIREMENTS

1. General Landscape Requirements

a. Landscaping shall comply with SCDOT sight distance and sight triangle requirements. Landscaping shall not obstruct or impede traffic safety or obscure traffic signals, signs, or other similar traffic safety devices. Likewise, landscaping shall not obstruct the view of motorists using any street, driveway, parking aisles, or the approach to any street intersection so as to cause a traffic safety hazard. Any sight obstruction determined by the County or SCDOT shall be corrected immediately;

b. Native species and related cultivars shall be used. In general, all trees and shrubs shall be drought tolerant and locally adapted to the area and shall conform to the requirements in the latest edition of American Standards for Nursery Stock, published by the American Association of Nurserymen;

c. The use of existing vegetation to satisfy the requirements of this item is permissible. However, supplemental plantings may be required, in addition to native plant material, by the Administrator;

d. Vacant commercial parcels shall be landscaped while vacant to stabilize the site and maintain an attractive appearance along the corridor. At a minimum, such landscaping shall include turf grass or other vegetative ground cover to stabilize the soil;

e. Earthen berms may be used to comply with the landscaping, buffer yard, and screening regulations of this item provided they comply with all other requirements of this district. Likewise, additional screening in the form of earthen berms (or fencing) may be required, on a case-by-case basis, by the Administrator. In general, the following shall also apply to earthen berms located within the Highway Corridor Overlay District:

i. Berms shall have a minimum height of 3 feet and a minimum crown width of 8 feet;

ii. Berms shall not exceed a maximum height of 6 feet;

iii. If 4 feet in height or less, a berm shall have a side slope no greater than 3:1. If greater than 4 feet in height, a berm shall have a side slope no greater than 4:1;

iv. Berms shall be designed and constructed with an undulating appearance to mimic the natural topographical features of a site; and

v. The Administrator may allow an exception to the minimum and maximum height requirements for an earthen berm where topography or other natural site features may justify such an exception.

f. Plants shall complement the surrounding structures in form, color, and height. Compliance of this requirement shall be determined during site plan review by the County; and

g. Landscaping Completion and Maintenance:

i. Completion: All landscaping shall be installed pursuant to the requirements of the Highway Corridor Overlay District or County approved landscaping plans unless substitutions are approved under the regulations set forth in Chapter 7 of the UDO. A Certificate of Occupancy for any business or use within the Highway Corridor Overlay District shall not be issued until the required landscaping is installed by the property owners, occupants, and tenants or their agents. If agreeable to the County, a Certificate of Occupancy may be issued prior to the installation of required landscaping provided the owner furnishes a letter of credit, cash escrow, or other guarantee acceptable to the County assuring completion of all landscaping, including labor. Acceptance of any such form of guarantee is at the discretion of the County; and

ii. Maintenance: The property owners, occupants, and tenants or their agents shall be jointly and severally responsible for the maintenance of all landscaping. All landscaping required by or installed pursuant to the requirements of the Highway Corridor Overlay District or County approved landscaping plans shall be free of disease and maintained in a healthy condition. All required landscaping shall be kept free of litter and debris, and shall be free of dead, diseased, or severely damaged plants. Likewise, any plants removed as the result of death, disease, or damage shall be replaced in a timely manner.

2. **Corridor Frontage Buffer:** A Corridor Frontage Buffer shall be required within the first 25 feet of front yard as measured from the edge of the road right-of-way. The following shall apply:

a. Three 3 canopy trees shall be planted per 100 feet of corridor frontage and shall be equally spaced on center where possible. Where overhead utility lines exist, 5 understory trees shall be planted per 100 feet of corridor frontage instead and shall be equally spaced on center where possible. At installation, canopy trees shall have a minimum caliper of 2.5 inches when measured 6 inches above ground with a minimum height of 10-12 feet; understory trees shall have a minimum caliper of 2.5 inches when measured 6 inches above ground with a minimum height of 8-10 feet;

b. In addition to the tree requirement, the Corridor Frontage Buffer shall consist of any combination of shrubs, turf grass, or other ground cover. In general, no portion of the Corridor Frontage Buffer shall contain bare soil;

c. No impervious surface shall be allowed in this area except for streets and driveways connecting to the point of ingress and egress, signs permitted in the Highway Corridor Overlay District, or sidewalks when connecting to a site; and

d. There shall be no display of merchandise for sale or other similar display within this area.

3. **Screening and Buffer Yards:** To minimize potential conflicts between zoning districts and/or uses, the screening and buffer yard regulations established in Chapter 7, General Development Standards, of the UDO shall apply. The following shall also apply:

a. Containers, dumpsters, mechanical equipment, and similar structures shall be located to the rear and/or side of the building they serve. New utility boxes shall also be located to the rear and/or side of the building they serve;

b. All containers, dumpsters, mechanical equipment, utility boxes, and similar structures shall be screened from view from all adjacent properties, residential use districts, and public right-of-way using an opaque screen;

c. Where applicable, containers, dumpsters, and similar structures shall be screened from view, using a semi-opaque screen, from the upper levels of adjacent buildings;

d. Roof-top mounted mechanical equipment shall be screened to their full height by a parapet or other structure that is complementary to the building in material and color. Ground-mounted mechanical equipment shall be screened to their full height on all sides using an opaque screen;

e. Outdoor vending machines and similar devices shall be located as to limit view from residential use districts and corridor right-of-way;

f. Stormwater management basins shall be screened from view from the corridor with a continuous evergreen screen as outlined in Section 4.3.2.K.6.a.ii;

g. Boundary fences or walls as may be permitted in Chapter 7 of the UDO shall comply with the materials requirements of Section 4.3.2.F.4; and

h. Chain link, welded or woven wire, and other similar fencing is not permitted.

4. **Drive-Thru Facilities:** For buildings fronting on the corridor, the preferred location for drive aisles associated with drive-thru facilities is to the rear of the building or within the side-yard of the building served. However, if topography or other site constraints preclude drive-thru aisle placement to the rear or side of the building, drive aisles may be placed between the building and the required 25 foot HCOD Corridor Frontage Buffer. In this instance service areas shall remain on the side or rear of the building and the following requirements shall be met:

a. Drive-thru facilities shall not encroach into the required 25 foot HCOD Corridor Frontage Buffer;

b. Drive-thru facilities shall be screened so that views of vehicles from the US Highway 521 or SC HWY 160 right-of-ways are partially concealed and screened from visibility of passing cars and pedestrians. Appropriate visibility for safety and functionality shall be maintained. This shall be accomplished through the use of decorative masonry walls and landscaping as follows:

i. A decorative masonry wall shall be a minimum height of 36 inches as measured from finished grade on the corridor side of the wall and shall complement the surrounding buildings in material and architectural vernacular.

ii. Both the decorative masonry as noted in items (a) and (b) above shall be located outside of the 25 foot HCOD Corridor Frontage Buffer;

iii. The screening elements outlined in this section shall be designed in a manner to allow unobstructed pedestrian access to the site at a minimum of one location. Such access may be necessary in more than one location for larger sites and development. When a sidewalk is provided along the corridor, a perpendicular connection shall be provided between the required pedestrian access and the provided corridor sidewalk.

iv. The preferred material for decorative masonry walls is the stacked stone precedent for the US Highway 521 corridor in Indian Land. See example below. At a minimum, the materials shall comply with Section 4.3.2.F.4.

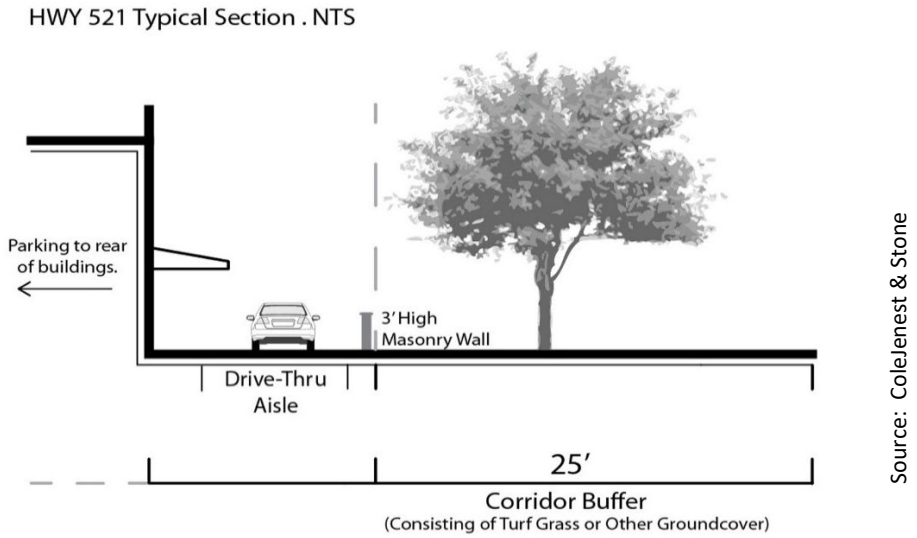

5. Median and Right-of-Way Landscaping: In general, there shall be no bare soil between the right-of-way and edge of pavement. At a minimum, this area shall include maintained turf grass. Maintenance is the responsibility of the owner. Additional median and/or street right-of-way landscaping shall be required for retail commercial development or use with a gross indoor floor area in excess of 40,000 square feet. This requirement shall also apply to all non-residential portions of a PDD development and all Homeowners' Association (HOA) controlled or maintained subdivision entrances. Such additional landscaping shall consist of a combination of trees, shrubs, turf grass or other ground cover as approved by SCDOT and the TRC. The following provisions shall apply:

a. All landscape improvements shall be approved by SCDOT, and shall comply with the requirements set forth in the latest edition of the SCDOT ARMS Manual;

b. An encroachment permit with SCDOT shall be required for any landscape work performed within a public street or highway right-of-way;

c. Median improvements shall include the entire width of the median, not just the side adjacent to the commercial development. At a minimum such improvements shall extend the full length of the proposed commercial development. However, in some cases SCDOT may require median improvements to extend to the nearest median crossover;

d. Landscape improvements shall comply with SCDOT sight distance and sight triangle requirements. Any sight obstruction determined by the County or SCDOT shall be corrected immediately; and

e. Irrigation shall be required as determined necessary by SCDOT, per the latest edition of the ARMS Manual;

f. As required by SCDOT, applicants shall furnish, install, and maintain all plantings. Owner(s) shall be responsible for perpetual maintenance of all vegetation (and irrigation when applicable) within the right-of-way that is contiguous with the landscape improvements. SCDOT shall not be responsible for providing water, fertilizer, labor, materials, or maintenance within the landscaping limits of the right-of-way.

6. Parking Area Landscaping and Screening

a. Perimeter Parking Area Planting:

i. A perimeter landscape strip with a minimum width of 8 feet shall be required on all sides of parking areas. This area shall not be located within the required Corridor Frontage Buffer;

ii. A continuous evergreen shrub screen is required within the perimeter landscape strip. Evergreen shrubs shall be at least 36 inches in height with a minimum spread of 24 inches at time of planting, and shall be spaced no more than 5 feet on center. Shrubs shall have an average mature height of 6 feet. A masonry wall, 3 feet above ground level, may be used in place of a continuous evergreen shrub screen. Such perimeter screen may be penetrated for ingress/egress, including stub out and shared drive easements;

iii. Canopy trees shall line the perimeter of all parking areas and shall be spaced no more than 40 feet on center. At installation, canopy trees shall have a minimum caliper of 2.5 inches when measured 6 inches above ground with a minimum height of 10-12 feet. Where overhead utility lines exist, understory trees shall be planted instead and shall be spaced no more than 25 feet on center. Understory trees shall have a minimum caliper of 2.5 inches when measured 6 inches above ground with a minimum height of 8-10 feet. All trees shall have all limbs trimmed at least 6 feet above ground level;

iv. No less than a minimum of one tree planting area shall be provided for every 10 parking spaces. Additionally, a tree planting area shall be provided at both ends of all parking aisles. Each tree planting area shall be a minimum of 200 square feet in area, being at least 10 feet in width, and shall be edged with a curb at least 6 inches in height. Each tree planting area shall be planted with one canopy tree shall have a minimum caliper of 2.5 inches when measured 6 inches above ground with a minimum height of 10-12 feet. Where overhead utility lines exist, understory trees shall be planted instead and shall have a minimum caliper of 2.5 inches when measured 6 inches above ground with a minimum height of 8-10 feet. In addition to the tree requirement, each tree planting area shall consist of any combination of shrubs, turf grass, or other ground cover so that no portion of the tree planting area shall contain bare soil. Where sight lines may not permit shrubs, tree planting areas shall contain turf grass or other ground cover. Shrubs in tree planting areas shall be maintained at a maximum height of 30 inches. All trees shall have all limbs trimmed at least 6 feet above ground level;

v. The landscaping requirements of this Item J.1.e shall not be used to meet any other landscaping, buffer yard, or screening requirements of the UDO; and

vi. Parking areas with less than 20 spaces shall not be subject to the provisions of Section 4.3.2.K.6.

vii. Lists of Recommended Trees and Shrubs: The following lists are the recommended trees and shrubs for the Highway Corridor Overlay District. Plants were selected for inclusion on these lists according to their general suitability for the climate and soil conditions of this area, ease of maintenance, tolerance of area conditions, and availability from area nurseries. If an introduced species has proven highly effective in this area, it too may be a proper selection. However, plants not included in the following lists shall be approved by the Administrator prior to installation.

Canopy Trees Common Name	Scientific Name
Red Maple	Acer rubrum
Sugar Maple	Acer saccharinum
River Birch	Betula nigra
Bitternut Hickory	Carya cordiformis
Pecan	Carya illinoinensis
Shagbark Hickory	Carya ovata
Chinese Chestnut	Castanea mollissima
Sugar Hackberry	Celtis laevigata
Common Hackberry	Celtis occidentalis
Beech	Fagus grandifolia
White Ash	Fraxinus americana
Green Ash	Fraxinus pennsylvanica
Ginkgo	Ginkgo biloba 'Fairmont' or 'LakeView'
Kentucky Coffeetree	Gymnocladus dioicus
Chinese Flame Tree	Koelreuteria bipinnata
Tulip poplar	Liriodendron tulipifera
Cucumber Magnolia	Magnolia acuminata
Dawn Redwood	Metasequoia glyptostroboides
London Planetree	Platanus x acerifolia
Sawtooth Oak	Quercus acutissima
White Oak	Quercus alba
Scarlet Oak	Quercus coccinea
Southern Red Oak	Quercus falcata
Laurel Oak	Quercus hemisphaerica
Overcup Oak	Quercus lyrata
Water Oak	Quercus nigra
Nuttall Oak	Quercus nuttallii
Pin Oak	Quercus palustris
Willow Oak	Quercus phellos
Red Oak	Quercus rubra

Shumard Oak	Quercus shumardii
Black Oak	Quercus velutina
Japanese Pagoda Tree	Sophora japonica
Bald Cypress	Taxodium distichum
Little Leaf Linden	Tilia cordata
Lacebark Elm	Ulmus parvifolia
Japanese Zelkova	Zelkova serrata
Understory Trees Common Name	**Scientific Name**
Trident Maple	Acer buergerianum
Amur Maple	Acer ginnala
Paperbark Maple	Acer griseum
Japanese Maple	Acer palmatum
Serviceberry	Amelanchier arborea
Eastern Redbud	Cercis canadensis
Chinese Redbud	Cercis chinensis
Chinese Fringetree	Chionanthus retusus
Fringetree	Chionanthus virginicus
Flowering Dogwood	Cornus florida
Rutger's Hybrid Dogwood	Cornus x 'Cultivar'
Smoketree	Cotinus coggygria
Washington Hawthorn	Crataegus phaenopyrum
Green Hawthorne	Crataegus viridis 'Winter King'
Carolina Silverbell	Halesia carolina
Golden Rain Tree	Koelreuteria paniculata
Crape Myrtle	Lagerstroemia indica, Lagerstroemia x fauriei
Star magnolia	Magnolia stellata
Saucer Magnolia	Magnolia x soulangeana
Japanese Flowering Crabapple	Malus floribunda
Flowering Crabapple	Malus hybrida
Wax Myrtle	Myrica cerifera
Sourwood	Oxydendrum arboreum

Chinese Pistache	Pistacia chinensis
Purpleleaf Plum	Prunus cerasifera 'Pissardii'
Kwanzan Cherry	Prunus serrulata 'Kwanzan'
Weeping Cherry	Prunus subhirtella pendula
Okame Cherry	Prunus x incam 'Okame'
Yoshino Cherry	Prunus x yedoensis
Chinese Elm	Ulmus parvifolia
Evergreen Trees (Large Maturing) Common Name	**Scientific Name**
Deodar Cedar	Cedrus deodara
Japanese Cedar	Cryptomeria japonica
Savannah Holly	Ilex x attenuata 'Savannah'
Eastern Red Cedar	Juniperus virginiana
Southern Magnolia	Magnolia grandiflora
Shortleaf Pine	Pinus echinata
Loblolly Pine	Pinus taeda
Japanese Black Pine	Pinus thunbergiana
Laurel Oak	Quercus laurifolia
Green Giant Arborvitae	Thuja (standishii x plicata) 'Green Giant'
American Arborvitae	Thuja occidentalis
Canadian Hemlock	Tsuga canadensis
Carolina Hemlock	Tsuga caroliniana
Evergreen Trees (Small Maturing) Common Name	**Scientific Name**
Hinoki Flasecypress	Chamaecyparis obtusa 'Filicoides'
Foster Holly	Ilex x attenuate 'Fosteri'
American Holly	Ilex opaca
Greenleaf Holly	Ilex opaca 'Greenleaf
Yaupon Holly	Ilex vomitoria
'Emily Bruner' Holly	Ilex x 'Emily Bruner'
Nellie Stevens Holly	Ilex x 'Nellie R. Stevens'
Holly (large cultivars/varieties)	Ilex x 'Cultivar'
Little Gem Magnolia	Magnolia grandiflora 'Little Gem'

Virginia Pine	Pinus virginiana
Carolina Cherry Laurel	Prunus caroliniana
Emerald Arborvitae	Thuja occidentallis 'Emerald'
Shrubs (Under 6 feet) Common Name	**Scientific Name**
Glossy Abelia	Abelia x grandiflora
Wintergreen Barberry	Berberis julianae
Japanese Barberry	Berberis thunbergii
Purple Beautyberry	Callicarpa dichotoma
Flowering Quince	Chaenomeles speciosa
Japanese Falsecypress	Chamaecyparis pisifera 'Cultivar'
Spreading Euonymus	Euonymus kiautschovicus
Smooth Hydrangea	Hydrangea arborescens
Bigleaf Hydrangea	Hydrangea macrophylla
Oakleaf Hydrangea	Hydrangea quercifolia
Mountain Hydrangea	Hydrangea serrata
Dwarf Burford Holly	Ilex cornuta 'Burfordii Nana'
Chinese Holly	Ilex cornuta 'Cultivar'
Convexa Japanese Holly	Ilex crenata 'Convexa'
Japanese Holly	Ilex crenata 'Cultivar'
Little Leaf Japanese Holly	Ilex crenata 'Microphylla'
Roundleaf Japanese Holly	Ilex crenata 'Rotundifolia'
Dwarf Yaupon Holly	Ilex vomitoria 'Stokes Dwarf
Chinese Juniper	Juniperus chinensis 'Cultivar'
Juniper	Juniperus sp.
Pfitzer Juniper	Juniperus x pfitzeriana
Drooping Leucothoe	Leucothoe fontanesiana
Leatherleaf Mahonia	Mahonia bealei
Nandina	Nandina domestica 'Cultivar'
Japanese Andromeda	Pieris japonica
Narrow Leaved English Laurel	Prunus laurocerasus 'Angustifolia'
India Hawthorn	Rhaphiolepis indica

Yeddo Hawthorn	Rhaphiolepis umbellata
Glenn Dale Azalea	Rhododendron x 'Cultivar'
Gunrei Satzuki Azalea	Rhododendron x 'Cultivar'
Kaempferi Azalea	Rhododendron kaempferi
Reeves' Spirea	Spiraea cantoniensis
Thunberg's Spirea	Spiraea thunbergii
Japanese Yew	Taxus cuspidata
Sandankwa Viburnum	Viburnum suspensum
Shrubs (Over 6 Feet) Common Name	**Scientific Name**
Aucuba	Aucuba japonica
Butterfly Bush	Buddleia davidii
Camellia	Camellia japonica
Sasanqua Camellia	Camellia sasanqua
Cleyera	Cleyera japonica
Twig Dogwood	Cornus sericea
Thorny Elaeagnus	Elacagnus pungens
Winged Euonymus	Euonymus alatus
Greenspire Euonymus	Euonymus japonica
Border Forsythia	Forsythia x intermedia
Vernal Witch Hazel	Hamamelis vernalis
Common Witch Hazel	Hamamelis virginiana
Hybrid Witch Hazel	Hamamelis x intermedia
Panicle Hydrangea	Hydrangea paniculata
English Holly	Ilex aquifolium
Burford Holly	Ilex cornuta 'Burfordii'
Chinese Holly	Ilex cornuta 'Cultivar'
Japanese Holly	Ilex crenata 'Cultivar'
Hetzi Japanese Holly	Ilex crenata 'Hetzii'
Inkberry Holly	Ilex glabra
Lusterleaf Holly	Ilex latifolia
Yaupon Holly	Ilex vomitoria

Emily Bruner Holly	Ilex x 'Emily Bruner'
Small Anise Tree	Illicium parviflorum
Chinese Juniper	Juniperus chinensis 'Cultivar'
Hollywood Juniper	Juniperus chinensis 'Kaizuka'
Laurel	Laurus nobilis
Loropetalum	Loropetalum chinense
Star Magnolia	Magnolia stellata
Wax Myrtle	Myrica cerifera
Northern Bayberry	Myrica pensylvanica
Japanese Pittosporum	Pittosporum tobira
Podocarpus	Podocarpus macrophyllus maki
English Laurel	Prunus laurocerasus
Indian Azalea	Rhododendron indica
Bridalwreath Spirea	Spiraea prunifolia 'Plena'
Vanhoutte Spirea	Spiraea x vanhouttei
Oriental Arborvitae	Thuja orientalis
Doublefile Viburnum	Viburnum plicatum f. tomentosum
Leatherleaf Viburnum	Viburnum rhytidophyllum
Laurustinus Viburnum	Viburnum tinus
Judd Viburnum	Viburnum xjuddii

K. IMPERVIOUS SURFACE STANDARDS The amount of on-site impervious surface areas shall be limited to the prescribed ratios set forth in Chapters 2, 3, and 8 of the UDO.

L. OPEN SPACE AND TREE PRESERVATION

1. **Open Space:** A minimum of 10 percent of the site must be devoted to usable open space which may include greens, unaltered natural features, or other similar areas not covered by impervious surface as required in Chapters 2, 3, and 8 of the UDO. Required setbacks and buffer yards may be included in calculating this requirement. The Administrator may reduce this requirement for parcels 5 acres or less on a case-by-case basis. All open space shall be clearly labeled as such on any plans submitted for County review;

2. **Tree Preservation:** All required setbacks and buffer yards shall be used as tree preservation areas. The provisions set forth in Chapter 7 of the UDO, retention and protection of large trees, shall be required for all development within the Highway Corridor Overlay District. In addition, all canopy trees with a diameter breast height (DBH) greater than 24 inches shall be incorporated into the site plan unless there is no suitable alternative due to unavoidable grading or because of required configuration of a street, driveway, sidewalk, permitted sign, essential utility, or buildings. The following shall also apply:

a. Such trees may only be removed under one or more of the following conditions:

   i. The tree is unhealthy, diseased, or dead;

   ii. The tree causes a safety hazard to nearby buildings or pedestrian or vehicular circulation;

   iii. The tree is of a species that may drop debris or sap that can significantly affect property;

   iv. The tree is interfering with an existing underground utility line;

   v. The tree is located within the building envelope as determined by building placement standards within the UDO;

   vi. The tree is causing significant structural damage to a building or other similar structure; and/or

   vii. It is necessary to allow construction of a street or driveway essential for access to a parcel.

b. To ensure protection of existing trees, protection shall be provided around tree preservation areas and shall comply with the provisions set forth in Chapter 7 of the UDO;

c. The mitigation requirements set forth in Chapter 7 of the UDO shall apply. Any canopy trees with a diameter (DBH) greater than 24 inches that are removed shall also be replaced with another similar tree elsewhere on the parcel. Any replacement tree within the Highway Corridor Overlay District shall have a minimum caliper of 2.5 inches when measured 6 inches above ground with a minimum height of 10-12 feet.

M. INDUSTRIAL DISTRICTS

In general, the requirements of the Highway Corridor Overlay District shall apply to all industrial use. The following exceptions shall apply to industrial use:

1. **Setbacks:** When fronting the corridor, a front setback of 25 feet is permitted and preferred for buildings with an industrial use. The setback requirements set forth in Chapter 2 and Chapter 3 of the UDO shall otherwise apply;

2. **Building Vernacular:** At a minimum, variation in architectural appearance is required for an industrial use fronting the corridor. Large expanse of blank exterior walls fronting the corridor shall be limited through the use of varied color, pattern, horizontal and vertical lines, or other architectural features; and

3. **Off-Street Parking:** For buildings with an industrial use fronting on the corridor, it is preferred that off-street surface parking is located primarily to the rear or side of the building it serves. However, industrial use parking may also be located at the front of the building it serves. The parking area landscaping and screening requirements of the Highway Corridor Overlay District shall apply.

N. OTHER ZONING REQUIREMENTS

To the extent that the Highway Corridor Overlay District may contain land development standards and requirements that are inconsistent with or conflict with land development standards and requirements contained elsewhere in the UDO, including permitted uses of the zoning districts which underlie this overlay district, the more restrictive and stringent regulations shall be deemed controlling. Likewise, when any existing County ordinance is amended, the more restrictive provisions of such revised ordinance shall apply even if the provisions of the Highway Corridor Overlay District are more relaxed. All projects within the Highway Corridor Overlay

District shall comply with all other applicable provisions of the UDO which are not in conflict with the preceding provisions of the Highway Corridor Overlay District.

O. TYPICAL CORRIDOR CROSS SECTION

The following illustration is a typical cross section along the Highway Corridor Overlay district.

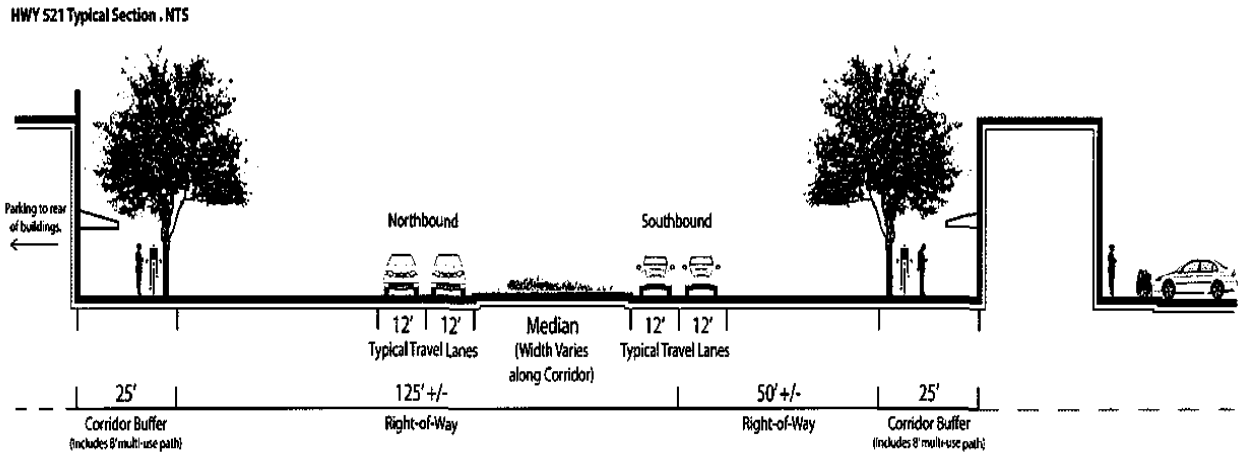

Source: Colelenest & Stone

4.4 CHARACTER PROTECTION OVERLAYS

4.4.1 CLUSTER SUBDIVISION OVERLAY DISTRICT (CSO)

The Cluster Subdivision Overlay District, is hereby established. Cluster subdivisions are residential developments which offer an alternative to traditional subdivision design, with the principle purpose being to encourage open space in medium density residential districts. Cluster subdivisions shall be designed using a site planning technique that concentrates buildings and structures to the most buildable areas of a site in order to preserve the remaining area as open space for recreation and preservation of significant site features. Reductions below the minimums otherwise required by the UDO for lot area, lot width, and setbacks are allowed within a CSO, and such reductions are only permissible within a CSO. By preserving open space, a cluster subdivision will provide another tool by which the County shall preserve its rural character. Cluster subdivisions are permitted in moderate density single family residential districts, specifically, Medium Residential District. Cluster subdivisions are not permitted in any other zoning districts. Development of a Cluster Subdivision requires submission of a Development Agreement (see UDO 9.2.18). (Ord. No. 2019-1623, 12.9.19) The following general provisions apply to the Cluster Subdivision Overlay District:

A. MINIMUM ACREAGE

The minimum tract area for a cluster subdivision shall be 30 gross acres [unless a larger minimum acreage is required as part of the Development Agreement Process (i.e. 25-acres of highland)], shall consist of contiguous parcels, and must adjoin or have direct access to at least one collector street. (Ord. No. 2019-1623, 12.9.19)

B. MINIMUM LOT AREA

The minimum lot area (in square feet) per dwelling unit within a cluster subdivision shall be 5,000 square feet. This shall be the minimum lot area allowed for any lot with the minimum lot width of 50 feet, as defined in Section C below. The minimum lot area per dwelling unit shall increase proportionately with an increase in lot width.

C. MINIMUM LOT WIDTH

In a cluster subdivision, where both central water and sewer services are available and adequate, the minimum lot width shall be 50 feet.

D. VARIETY OF LOT SIZES

Individual lots in a cluster subdivision shall vary in size and layout. No more than 34 percent of the lots in a cluster subdivision shall have a single designated lot width. The following shall also apply:

1. The minimum separation between any two designated lot widths shall be 10 feet. For example, if 34 percent of the total number of lots has a lot width of 50 feet, 34 percent could have a lot width of 60 feet, and the remaining could have a lot width of 70 feet or greater.
2. The Planning Commission may allow a developer to vary the width of individual lots to accommodate site restrictions (i.e., easements, corner lot widths, etc). However, such lots shall be counted with the nearest designated lot width.

E. SETBACKS

The following minimum setbacks are required for individual lots within a cluster subdivision:

1. **Front Yard:** The minimum front yard setback shall be 20 feet. The front yard setback for a corner lot shall be as set forth in Chapters 2 and 3 of the UDO;
2. **Rear Yard:** The minimum rear yard setback shall be 30 feet;
3. **Side Yard:** The minimum side yard setback shall be 7 ½ feet.

F. OPEN SPACE REQUIREMENT

For a cluster subdivision, no less than 25 percent of the site acreage, not including primary conservation areas as defined in Item 3 below, shall be set aside in perpetuity as open space. Open space shall be clearly labeled as such on any preliminary or final plat (including sketch plans) submitted for review. Open space in a cluster subdivision is also subject to the following:

1. Open space may include, but is not limited to, passive recreation, natural preservation of important scenic vistas, environmentally sensitive lands, habitat for wildlife, and historically or archaeologically significant areas. Structures, swimming pools, and athletic facilities shall not count as open space. However, structures are permitted in the open space when they serve an accessory function, such as a gazebo, fishing dock, playground equipment, or play structures (Ord. No. 2019-1623, 12.9.19);
2. The amount of open space required to be set aside shall be determined by the following formula:

Open Space Set Aside = Total Parcel minus Primary Conservation Areas multiplied by Open Space Percentage then added to Primary Conservation Areas

TO = ((TP - PC) OSP) + PC

TO	=	Total Open Space Set Aside	(acres)
TP	=	Total Parcel	(acres)
PC	=	Primary Conservation Areas	(acres)
OSP	=	Open Space Percentage	(% of Improvable Area)

3. Primary Conservation area includes those areas that cannot otherwise be built upon or improved and therefore would be preserved in a conventional development. Such areas specifically include wetlands, surface waters, and intermittent stream channels;

4. To fulfill the requirements of this item (f), the following shall be included in the required open space where practicable:

   a. Wooded areas;

   b. Scenic vistas;

   c. Streams, ponds, wetlands, and floodplains;

   d. Buffers, including landscaped, perimeter, river, and stream;

   e. Areas containing slopes in excess of 25 percent;

   f. Other areas containing unusual natural site features (such as major rock formations); and

   g. Other environmentally, historically, or archaeologically significant or unique areas;

5. Open space shall be contiguous to the extent practicable when not restricted by topography, existing water body, and other natural features;

6. Pedestrians shall have access to open space;

7. Open space shall be deed restricted and shall not be developed for use other than open space;

8. Open space shall remain under the ownership and control of the developer (or successors) or a homeowners association or similar organization. The person or entity identified as having the right of ownership and control over such open space shall be responsible for the continuing upkeep and proper maintenance of the open space. The County shall have no responsibility for the maintenance of open space areas. If open space location meets a need in the County comprehensive plan, the County and developer may consider conveyance of completed open space to the County, upon Planning Commission and Council approval.

   The person or entity having the right of ownership and control over such recreational facilities and open space shall be responsible for the continuing upkeep and proper maintenance of the same. It shall not be the responsibility of the County to maintain these areas.

9. A cluster subdivision shall include provisions for the protection of trees and other natural amenities within the area or areas designated for open space. The removal of trees and natural vegetation in designated open space is strongly discouraged, though it is permitted during the development phases for the purpose of trails and other such recreational improvements as approved by planning staff. All open space shall be clearly labeled as such on any preliminary or final plat (including sketch plans) submitted for review. Trees over 24 inches in diameter (DBH) shall be preserved and incorporated in designated open space where practicable, and upon the request of planning staff such trees existing within areas designated for trails and other such recreational improvements may also need to be shown and labeled. Upon completion of development phases, no person or entity shall remove or destroy any trees or natural vegetation from designated open space without approval from the Administrator. However, normal maintenance and removal of dead or fallen trees are permitted and recommended, and shall be the responsibility of the person or entity identified as having the right of ownership as outlined in Item 8 above.

G. MAXIMUM DENSITY

The maximum number of dwelling units allowed per acre for a cluster subdivision shall not exceed the maximum for the residential use district in which it is located, as set forth in Chapter 2 of the UDO, where the total number of dwelling units allowed shall be based on the gross acreage of the site. For example, when the CSO is located within the MDR, Medium Density Residential, where the maximum density is two dwelling units per acre, a 100-acre parcel of land shall be allowed to have no more than 200 dwelling units built on the site.

H. COMMERCIAL REQUIREMENT: There shall be no required commercial within a cluster subdivision.

I. SITE PLANNING REVIEW STANDARDS: A cluster subdivision shall follow the site plan review standards and procedures as set forth in Chapter 9 of the UDO, including but not limited to Section 9.2. Furthermore, planning staff shall also include the following in their review:

1. Overall site design shall be harmonious in terms of landscaping, enclosure of principal and accessory uses, sizes of structures, street patterns, and use relationships;
2. The site layout shall accommodate and preserve any features of historic, cultural, archaeological, or sensitive environmental value. Individual lots, buildings, structures, streets, parking areas, utilities, and infrastructure shall be designed and sited to minimize the alteration of natural features, vegetation, and topography;
3. Where practicable, individual lots, buildings, structures, streets, parking areas, utilities, and infrastructure should be designed and sited to be compatible with surrounding development patterns;
4. Where practicable, open space shall be located on a site in such a manner so that view sheds from existing public right-of-way are not obstructed, but are enhanced by the open space;
5. Private streets are permitted in a cluster subdivision, provided such streets meet the construction standards of Chapter 6 and Appendix C of the UDO. The following shall apply:
   a. As required in Chapter 6 of the Lancaster County Code, as amended, the minimum right-of-way and pavement width shall be as follows:

Road Type	Right-of-Way (feet)	Pavement (feet)
Local (closed drainage)	50	22
Local (open drainage)	66	22
Collector	66	24

   b. On-street parking is permitted in a cluster subdivision where adequate right-of-way and pavement width is provided in accordance with standards of the South Carolina Department of Transportation; and
   c. To ensure adequate clearance for emergency vehicles in a cluster subdivision, the Planning Commission may require signage and/or pavement markings to clearly indicate areas where on-street parking is prohibited;
6. Installing sidewalks on both sides of local streets in a cluster subdivision is encouraged. At a minimum, a sidewalk will be required on at least one side of every local street, with a

sidewalk required on both sides of arterial and collector streets. Local, arterial, and collector streets shall be clearly labeled as such on any preliminary or final plat submitted for review;

7. In general, landscaping requirements for a cluster subdivision shall comply with the requirements of Chapter 7 of the UDO. However, the Planning Commission may vary such requirements in response to applications demonstrating alternative landscaping based on creative site planning. Existing trees and natural vegetation shall be retained wherever possible and shall count towards meeting the landscaping requirements;

8. The following buffer requirements shall apply for a cluster subdivision:

a. In general, buffer requirements for a cluster subdivision shall comply with the requirements of Chapter 7 of the UDO where a buffer yard may be required between adjacent zoning districts;

b. Existing trees and natural vegetation shall be retained wherever possible and shall count towards meeting the buffer requirements;

c. Ingress/egress to the property shall be allowed within a buffer, as well as utility easements and sidewalks;

d. A 50 foot buffer shall be required on the frontage of all existing public streets. Where there is insufficient natural vegetation to provide a visual buffer for principal structures, plantings shall be installed by the developer. A minimum of 25 percent of the trees and 75 percent of the shrubs shall be evergreens;

e. The Planning Commission may allow a developer to vary the buffer requirement to preserve view sheds from existing view sheds, as required in Item 4 above.

f. Buffer requirements within a cluster subdivision shall count as open space where it is contiguous with other areas designated as open space.

9. Variety in architecture and building materials shall be encouraged within a cluster subdivision. It is encouraged that buildings are constructed using quality finish materials (i.e., brick, masonry, stone, concrete siding, or stucco). Vinyl siding is permissible if in combination with other building materials.

J. OTHER ZONING REQUIREMENTS

The Cluster Subdivision Overlay District, may contain zoning and development standards and requirements that are inconsistent with or conflict with zoning and development standards and requirements contained elsewhere in the UDO. The standards and requirements contained in the Cluster Subdivision Overlay District supersede all other zoning and development standards and requirements. The Cluster Subdivision Overlay District is deemed controlling. If the Cluster Subdivision Overlay District is inconsistent with or conflicts with zoning and development standards and requirements contained elsewhere in Chapter 4, then the zoning and development standards and requirements contained in Chapter 4 supersede the standards and requirements contained in the Cluster Subdivision Overlay District and the provisions contained in Chapter 4 are deemed controlling.

K. EXAMPLES OF APPLYING FORMULAS

Below are examples of applying formulas to determine the total number of dwelling units allowed and the amount of the site acreage to be set aside as open space within a Cluster Subdivision Overlay District.

Example: Assume that a 50 acre parcel is being developed. The residential use district is MDR, Medium Density Residential District, where the maximum density is 2.5 dwelling units per acre. Assume that there are 5 acres of Primary Conservation area. The open space percentage is 25 percent (or as a decimal, .25).

1. The following formula would be used to determine the total number of dwelling units allowed:

   Total Dwelling Units Allowed = Total Parcel multiplied by Maximum Dwelling Units per Acre

   TU = (TP) (DUA)

TU	=	Total Units Allowed	(dwelling units)
TP	=	Total Parcel	(acres)
DUA	=	Maximum Dwelling Units per Acre	(dwelling units/acres)

   TU = (50) (2.5)

   TU = 125 Total Lots or Dwelling Units Allowed

2. The following formula would be used to determine the amount of the site acreage to be set aside as open space:
   Total Open Space Set Aside = Total Parcel minus Primary Conservation Areas multiplied by Open Space Percentage then added to Primary Conservation Areas

   TO = ((TP - PC) OSP) + PC

TO	=	Total Open Space Set Aside	(acres)
TP	=	Total Parcel	(acres)
PC	=	Primary Conservation Areas	(acres)
OSP	=	Open Space Percentage	(% of Site Acreage excluding PC)

   TO = Total Open Space Set Aside

   TP = 50 acres Total Parcel

   PC = 5 acres Primary Conservation Areas

   OSP = 25% (or .25) Open Space Percentage

   TO = ((50 - 5) .25) + 5

   TO = ((45) .25) + 5

   TO = (11.25) + 5

   TO = 16.25 acres of Total Open Space Set Aside

4.4.2 EQUESTRIAN ORIENTED SUBDIVISION OVERLAY DISTRICT (EOSO)

Equestrian Oriented Subdivision Overlay District is hereby established. Equestrian oriented subdivisions are residential developments which are designed with particular emphasis placed on equestrian activities and which provide such facilities as community stables, riding rings, pastures, and riding trails. In addition, private stables may be located on individual residential lots. Equestrian oriented subdivisions are permitted in all agricultural and residential zoning districts except for the MH, Manufactured Housing District, subject to the following provisions:

A. BUILDING AND STRUCTURE

All buildings and structures related to the care or housing of horses and to the operation of the riding facilities on the common property shall be located at least 100 feet from any exterior property line of the development.

B. PRIVATE STABLES

Private stables on individual residential lots shall be located at least 5 feet, but not more than 60 feet, from any rear property line or horse trail; 20 feet from any interior property line; 40 feet from any corner yard property line, and in the front yard it shall be located behind the front facade of the principal building. However, along the exterior property line of the development, the setback shall be 100 feet unless a horse trail separates the property from the land located outside the development. In such a case, the setbacks shall be as stated above.

C. MINIMUM LOT SIZE

If a horse or miniature horse is to be kept on a lot which is located within this designation, the minimum lot size shall be ½ acre. The number of horse(s) allowed is one horse or two miniature horses per ½ acre. The owner of a lot which contains less than ½ acre shall not be allowed to keep a horse on that lot. Otherwise, the minimum lot size shall be the same as is required by the underlying zoning district. The minimum lot width and setback requirements shall be the same as is required by the underlying zoning district.

D. RIDING TRAILS

Riding trails shall generally be located in the interior of the development. However, if a riding trail is to be located along the exterior property line of the development, it shall be set back 30 feet from the exterior property line of the development.

E. STABLES

The lots with stables located on them shall be designed and maintained to drain so as to prevent ponding, the propagation of insects, and the pollution of adjacent streams and other water bodies.

F. MAINTENANCE

The premises shall be maintained in a sanitary condition through the proper use of lime and pesticides.

G. HORSES IN CONTAINED AREAS

If the horses are in a contained area, all manure shall be removed at least twice a day from the confined area so as to prevent the propagation of flies and the creation of odors. Owners of horses kept in a confined area are encouraged to use a Rabon supplement as this will reduce the propagation of flies.

H. STORAGE OF GRAIN

All grain on the lot shall be stored in rodent-proof containers.

I. EXERCISE AND TRAINING AREAS

All exercise and training areas shall be dampened so as to prevent dust.

J. COMMUNITY RIDING FACILITIES

All proposed community riding facilities, including community stables, riding rings, pastures, and riding trails shall be indicated on the plans. As part of the information submitted when applying for an Equestrian Oriented Subdivision Overlay District, a written statement describing the proposed means of ownership and proposed program for maintenance of these facilities shall be included. A copy of this information shall be kept on file in the Planning Department and the Building and Zoning Department.

5 USE REGULATIONS

5.1 APPLICABILITY

There are certain uses that exist which may be constructed, continued, and/or expanded provided they mitigate impacts of their design and operation. Such conditions ensure compatibility so that different uses may be located in proximity to one another without adverse effects to either. When uses are listed in the Use Matrices in Chapter 2 as uses Permitted with Review (PR), uses requiring Conditional Use (CU) permit, or uses requiring a Special Exception (SE), they shall comply with the additional criteria set forth in this chapter for that use in addition to other applicable criteria contained in this ordinance.

5.1.1 PERMITTED WITH REVIEW (PR)

A. Permitted uses with special requirements are uses permitted by right, provided that the specific standards set forth in this article are met.

B. The specified standards are intended to insure that these uses fit the vision of the zoning districts in which they are permitted, and that these uses are compatible with other development permitted within the districts.

C. Approval procedures for uses Permitted with Review are found in Chapter 9, Administration.

5.1.2 CONDITIONAL USE (CU)

A. Conditional Uses are uses which are generally compatible with other land uses permitted in a zoning district but which, because of their unique characteristics or potential impacts on the surrounding neighborhood and/or the County as a whole, require individual consideration in their location, design, configuration, and/or operation at the particular location proposed.

B. All Conditional Uses shall at a minimum meet the standards for the zoning district in which they are located and the specific standards set forth in this article for that use.

C. Individual consideration of the use may also call for the imposition of individualized conditions in order to ensure that the use is appropriate at a particular location and to ensure protection of the public health, safety, and welfare.

D. Approval procedures for Conditional Use permits are found in Chapter 9, Administration.

5.1.3 SPECIAL EXCEPTION (SE)

A. Special Exceptions are uses which may have an adverse impact on the surrounding neighborhood or the County as a whole due to their unique and intrusive characteristics, requiring individual consideration in their location, design, configuration, and/or operation at the particular location proposed.

B. All Special Exceptions shall at a minimum meet the standards for the zoning district in which they are located and the specific standards set forth in this article for that use.

C. Approval procedures for Special Exceptions are found in Chapter 9, Administration.

5.1.4 SEPARATION REQUIREMENTS

A. **Purpose:** Separation requirements are included in this chapter for certain uses which, by their nature, tend to have a detrimental blighting effect upon surrounding properties when they are permitted to cluster in groups of more than one such use or when they are located too near to an adjacent property.

B. **Requests for Waiver or Reduction of Separation Requirements**

1. **For Uses that are Permitted with Review (PR):** A waiver or reduction of the applicable separation requirements of this chapter shall require a use Permitted with Review according to the process outlined in Chapter 9. The Board of Zoning Appeals shall consider the request for a waiver or reduction of the applicable separation requirements in accordance with 5.1.4.A above, taking into account the characteristics of the particular use in question.

2. **For Uses that require a Conditional Use Permit (CU):** The Planning Commission shall consider the request for a waiver or reduction of the applicable separation requirements of this chapter in accordance with 5.1.4.A above as part of the Conditional Use permit hearing, taking into account the characteristics of the particular use in question.

3. **For Uses that require a Special Exception (SE):** The Board of Zoning Appeals shall consider the request for a waiver or reduction of the applicable separation requirements in accordance with 5.1.4.A above, taking into account the characteristics of the particular use in question.

C. Where minimum separation distances are required between certain conditional uses and other uses; the separation distance shall not apply retroactively if the specified condition does not exist at the time the conditional use is approved.

5.1.5 CONFLICT WITH OTHER REGULATIONS

A. If there is a conflict between the standards set forth in this chapter and any other requirements of this ordinance, the most restrictive standard shall control except as set forth below.

B. The zoning district in which a particular use is permitted is controlled by the use listings found for the individual districts. In the event of any inconsistency between this article and the use listings for the districts, the use listings found in Chapter 2 shall control.

5.2 RESIDENTIAL USES

5.2.1 DWELLING – TWO FAMILY [MDR, PB, HDR]

A. **Building Location:** Two Family Dwellings shall be limited to one per block face.

B. **Building Type:** Two Family Dwellings (duplexes) shall be restricted to the Detached House building type as shown in Chapter 3 with a maximum of 2 units.

C. **Exterior Appearance**

1. Two Family Dwellings shall be designed such that a maximum of 2 main entrances are on the fronting facade. Additional building entrances may be provided on the side and rear of the building.

2. Two Family Dwellings on corner lots must be designed such that a building entrance is on each facade fronting a street.

5.2.2 DWELLING – MULTIFAMILY [RB, HDR, RMX, MX]

A. **RB** and **HDR Districts:** Multifamily uses in this district shall be allowed and must comply with the following requirements:

1. **Building Location:** Buildings with multifamily uses shall be limited to one per block face.

2. **Building Type:** Individual building footprints shall not exceed 15,000 square feet, except that building footprints may be up to 25,000 square feet in cases where at least 25 percent of the ground floor is reserved for neighborhood commercial uses served by their own exterior entrance.

3. **Density:** Developments shall be limited to a density of 8.0 dwelling units per acre.

B. MX Districts: Multifamily uses shall be limited to the second and higher floors in vertical mixed-use buildings only.

C. RMX and MX Districts: Multifamily uses in these districts shall be subject to standards in accordance with Chapter 3.

5.2.3 DWELLING – THREE FAMILY (TRIPLEX) AND FOUR FAMILY (QUADRAPLEX) [PB]

A. Building Location: three family and four family dwellings shall be limited to two per block face.

B. Lot Standards:

1. May only be located on pre-existing lots in existence as of the date of this ordinance (February 24, 2020).
2. May not exceed a development size of five acres.

C. Exterior Appearance:

1. Three family dwellings shall be designed such that a maximum of three main entrances are on the fronting façade. Additional building entrances may be provided on the side and rear of the building.
2. Four family dwellings shall be designed such that a maximum of three main entrances are on the fronting façade. Additional building entrances may be provided on the side and rear of the building.
3. Dwelling units on corner lots must be designed such that a building entrance is on each façade fronting a street.

D. Buffer: Type A buffer shall be installed as required in Section 7.1.5, Buffers and Screening of this Ordinance.

E. Density: Developments shall be limited to a density of eight dwelling units per acre.

(Ord. No. 2019-1620, 12.9.19; Ord. No. 2020-1645, 2.24.20)

5.2.4 DWELLING – ACCESSORY [AR, RR, RN, LDR, MDR, PB, UR, HDR]

A. Number of Accessory Dwellings Allowed: Only one accessory dwelling is permitted per lot in districts.

B. Placement on the Lot: A detached accessory dwelling shall be sited to the rear of the principal building. If the lot exceeds 2 acres in size, the accessory dwelling may be sited to the side of the principal building.

C. Compatibility

1. The accessory dwelling shall meet all applicable design standards for the zoning district in which it is located in accordance with Section 1.4.7.
2. The accessory dwelling shall be clearly subordinate (size, etc.) to the main structure. The maximum size shall be 50 percent of the heated living area of the principal dwelling.
3. The exterior of the accessory dwelling shall be similar to the primary residence in material selection, color, and roof alignment and pitch.

D. Manufactured Housing, Campers, Recreational Vehicles, Etc. Prohibited For Use: Manufactured housing, campers, travel trailers, and recreational vehicles are not permitted for use as an accessory dwelling, except as a temporary use when a primary dwelling unit on the same lot is under construction or rehabilitation (see Section 5.12.4). Upon issuance of Certificate of Occupancy for the primary dwelling unit, the accessory dwelling shall be removed

within 60 days.

E. Outside Entrance: If located within the principal dwelling, the accessory dwelling unit may have a private outside entrance, but such an entrance shall be located along the side or rear of the principal dwelling.

F. Accessory Dwelling Unit Features: The unit must contain complete kitchen facilities, including a stove or cook top, bedroom, and a full bath, including lavatory, water closet, and tub or shower (or combination). The unit must meet the habitability requirements of the International Property Maintenance Code and International Residential Code.

G. Parking: One off-street parking space, which meets the Vehicle Parking Standards in Chapter 7, shall be provided in addition to those required for the principal dwelling.

5.2.5 HALFWAY HOMES [GB, INS]

A. Separation Requirement: No such use may be located within 2,640 feet (or ½ mile) of a Family Care Home, Residential Care Facility, Boarding or Rooming House, or another such use measured as a straight line on a map.

B. Maximum Number of Residents: Halfway Homes shall accommodate a maximum of 6 residents per use and a maximum of 1 resident per bedroom.

5.2.6 LIVE-WORK UNITS [RUB, PB, NB, RMX, MX, IMX]

Construction shall meet requirements of the International Building Code and the following:

A. Non-residential use areas shall meet accessibility requirements of the Accessible and Usable Building and Facilities Code (including site access and parking).

B. The maximum total size of a Live-Work unit is 3,000 square feet and 3 stories in height.

C. The non-residential area function shall be limited to the first or main floor only.

D. A maximum of 5 non-residential workers or employees are allowed to occupy the non-residential area at any one time.

E. The work area shall occupy 50 percent or less of the total unit.

F. The same tenant shall occupy the work area and living area.

G. No equipment or process shall be used in connection with the non-residential function which creates noise, vibration, glare, fumes, fire hazard, odors, dust, or electrical or communication interference detectable to the normal senses outside the unit. No equipment or process shall be used which creates visual or audible interference in any radio or television receiver off the premises.

5.2.7 MANUFACTURED HOMES [AR, RR, MH]

A. Standards for All Manufactured Homes

1. Each manufactured home shall be set up in accordance with the requirements of the current edition of the South Carolina Regulations for Manufactured Homes, Uniform Standards Code for Manufactured Housing and Regulations (SC Code Ann. Section 40-29-10 et seq., as amended) and (23 SC Code Ann. Regs. 19-425 et seq.).

2. All wheels, axles, lights, and other mechanisms designed for transporting the manufactured home, excluding the tongue, must be removed.

3. Skirting, steps, decks, or porches for manufactured homes shall be installed before final inspection and shall be properly maintained.

4. All manufactured homes shall have a permanent foundation and shall be tied down per

manufacturers' instructions. Underpinning shall consist of a continuous brick or masonry curtain, fiber cement siding, or vinyl wall combined with masonry piers or similar piers; shall remain un-pierced except for required ventilation and access; shall be installed under the perimeter of the manufactured home; and shall conform to the home's exterior dimensions.

5. Manufactured homes shall be permanently connected to local utilities or be served with an approved septic tank or well.

6. Each manufactured home stand and space/lot shall be graded to provide adequate storm drainage away from the structure.

7. Each manufactured home space or lot shall have a permanent address, approved by the Administrator that is clearly visible from the street directly in front of the home. If the length of the access drive is greater than 50 feet, the address must be visible from the access drive also.

B. Age Limit

Manufactured homes built earlier than 30 years of the current year shall not be permitted. Existing manufactured homes older than 30 years shall remain, but, if removed, such manufactured homes shall be replaced with those built no earlier than 30 years from the current year.

C. Standards for Manufactured Home Parks

1. All manufactured homes within a Manufactured Home Park must meet the Standards for All Manufactured Homes in Section 5.2.6.A and 5.2.6.B.

2. No manufactured home park shall be approved for a site less than 5 contiguous acres under single ownership or control.

3. The manufactured home park shall be screened from all adjacent property and street frontage with a Type C Buffer Yard (see Section 7.1.5). Only evergreen canopy and understory trees may be used, no deciduous trees.

4. The operator/manager of a manufactured home park shall designate and enforce a uniform type of underpinning of all manufactured homes in the community.

5. A minimum of two automobile parking spaces surfaced with 4 inches of gravel shall be provided adjacent to each manufactured home space, but shall not be located within any public right-of-way or public easement or within any street.

6. All streets within a manufactured home park shall comply with the standards set forth in Chapter 6 and Appendix C, Manual of Specification and Standard Details (MSSD), including the following:

   a. Roadways in manufactured home parks shall have a minimum travel width of 22 feet exclusive of parking.

   b. All roadways in manufactured home parks shall be paved.

   c. All on-site roadway intersections shall be provided with a street light and one interior light shall be provided for each 400 feet of street length.

7. The maximum density for a manufactured home park shall not exceed 3 units per acre (43,560 square feet). Each lot or space within the park shall contain at least 14,520 square feet and shall be at least 80 feet in width. No more than one manufactured home shall be erected on one space. The maximum density allowed for a manufactured home park shall be based on the total acreage of the site minus the acreage required for recreational proposes.

8. Each manufactured home site shall be at least 30 feet from any other manufactured home or property line and at least 30 feet from the edge of any drive which provides common circulation. Accessory structures shall be at least 10 feet from any manufactured home other than the home to which the building is accessory and only one accessory structure shall be permitted per manufactured home.

9. Manufactured homes shall be permanently connected to local utilities or be served with an approved septic tank or well and provided screened refuse disposal facilities.

10. Each manufactured home stand and space/lot shall be graded to provide adequate storm drainage away from the structure.

11. Manufactured home sites shall only have direct access to internal park streets.

12. Existing trees and other natural site features shall, to the extent feasible, be preserved. Variations in the street pattern, block shapes, and location of manufactured home stands shall be employed as methods to preserve existing trees and other natural site features.

13. All manufactured home parks shall reserve and develop for recreational purposes a minimum of 15 percent of the park site.

14. No storage of unoccupied and/or damaged manufactured homes is permitted.

15. A permanent park identification sign displaying the name of the park and a permanent park directory sign displaying the address for and direction to each manufactured home in the park shall be erected at each entrance to the park. The required entrance and directory signs may be combined on one sign.

16. All spaces within a manufactured home park shall be serially numbered for mailing address purposes. These numbers shall be displayed in the front of the manufactured home on the driveway side with four-inch lettering.

17. Civic and open space shall be provided in accordance with Chapter 7.

18. No additions shall be added to any manufactured home except for those structures specifically designed for manufactured housing and those meeting the International Building Code.

19. Class C Manufactured Homes as defined in Chapter 10 are not permissible within any zoning district. No Class C Manufactured Home located in a park shall be replaced with another Class C Manufactured Home.

5.2.8 RESIDENTIAL CARE FACILITIES (6 OR MORE RESIDENTS) [RUB, NB, GB, RB, INS, MX, IMX]

A. **Buffering:** Residential care facilities must be buffered from adjacent residentially zoned property with a Type A buffer in accordance with Section 7.1.5.

B. **Licensing:** Prior to the submission of an application for a Zoning Permit, an owner/operator of a residential care facility shall have received a license from the State of South Carolina for such a facility.

C. **Number of Units:** Unless located and having access on a collector or arterial street, no residential care facility shall contain more than 16 units.

D. **Maximum Density:** The maximum gross density for residential care facilities shall not exceed the number of units per acre requirement for the district in which the development is located. Each dwelling in a duplex, townhouse, garden apartment, apartment building, every 4 beds in a residential personal care unit, and each 6 beds in a skilled care nursing facility shall constitute 1 dwelling unit for the purposes of calculating the density.

E. **Development Standards:** To the extent practical, the facility shall provide access connectivity

(vehicular and pedestrian) to adjacent neighborhoods.

F. **Separation Requirement:** Residential care facilities shall be located at least 1,000 feet away from any other residential care facilities, fraternity/sorority houses, and/or boarding or rooming houses.

G. **Accessory Uses:** The following accessory uses are permitted: congregate dining facilities, recreational and social facilities, health care facilities and similar service, gift shops, snack shops, banks, and barber/beauty shops for residents.

5.3 LODGING USES

5.3.1 BED AND BREAKFAST HOMES [AR, RR, RN, RUB, LDR, PB, NB, INS, UR, HDR, MX, IMX] AND INNS [NB, INS, UR, MX, IMX]

A. The bed and breakfast shall be operated in a principal structure constructed before the effective date of this ordinance and not in any accessory structure.

B. No exterior additions or alterations shall be made for the express purpose of creating or maintaining a bed and breakfast.

C. The use of the dwelling unit for the bed and breakfast shall be clearly incidental and subordinate to its use as a principal residence.

D. The guest rooms shall be offered primarily to transient persons for rental or lease by the day or week. Maximum length of stay is limited to 14 days in any 30-day period of time. The property owner or full time manager shall keep a current guest register including names, address, and dates of occupancy of all guests. These records shall be available for inspection by the building official and zoning official.

E. For bed and breakfast establishments, one off-street parking space for the owner/manager and one space per guest shall be required. The required off-site parking may be located on the lot containing the bed and breakfast provided that it is not located in the front yard.

F. Not more than one sign advertising the existence of a bed and breakfast operation may be erected on the lot where such use is located. No side of the sign may exceed 4 square feet in surface area. The sign may not be internally illuminated.

5.3.2 BOARDING OR ROOMING HOUSE [INS]

A. **Separation Requirement:** All boarding or rooming houses shall be located a minimum of 1,000 feet from any Family Care Home, Residential Care Facility, Fraternity or Sorority House, Halfway Home, and other Boarding or Rooming House.

B. **Development Standards**

1. A Type B buffer is required along the side and rear property lines.
2. Parking areas shall not be permitted within the front yard.
3. All of the lot area which is not used for parking, sidewalks, buildings, utility structures, or site access must be landscaped and maintained.

5.3.3 CAMPGROUND [AR, RR, OSP]

A. **Campground Use:** Campgrounds are limited to temporary occupancy by travel trailers, tents, and recreational vehicles (RVs) used by campers, vacationers, tourists, visitors, or the traveling public. Auxiliary uses, including retail store for guests, laundry, recreational facilities, snack shop, office, and security watchmen structure are also permitted. One office modular or site built office building may be allowed within the campground to be used as an office for the

persons responsible for the operation and maintenance of the campground.

B. Access: No campsite shall be located so as to allow direct vehicular access to a road. A 25-foot wide safe, convenient private drive shall be provided to each camp site, except in the case of one-way drives which shall not be less than 12 feet in width. Such drives shall be maintained at all times the campground is open to provide a smooth, all weather, well-drained surface, free of objectionable dust. Cul-de-sacs shall not exceed 1,000 feet in length and shall have an improved turn-around radius of 90 feet.

C. Registration of Occupants and Guests: Every owner or manager of a campground shall maintain a register containing a record of all campsite or travel trailer occupants (guests). Such register shall be made available for inspection by law enforcement officials. Such register shall contain:

1. Names of all campsite or trailer occupants (guests).
2. Make and license number of the travel trailer.
3. Dates of arrival and departure of travel trailer or occupants of a campsite.

D. Dimensional Standards:

Minimum Size	20 acres
Minimum Open Space[1]	40% of total property
Minimum Street Frontage	350 feet
Maximum Density	15 campsites/acre
Minimum Campsite Size	900 square feet/travel trailer; 500 square feet/tent
Minimum Campsite Setback	50 feet from property lines
Minimum Separation between Travel Trailers or Tents	20 feet
Maximum Primitive Campsites[2]	25% of the total number of tent campsites
Minimum Water Facilities	1 per 15 campsites
Minimum Sewer Hook Ups	1 per 15 trailer campsites
Minimum Garbage Containers	1 per 15 campsites
Minimum Service Buildings[3]	1 per 15 campsites without individual hook-ups. At least 1 per campground use.

1. *Open space areas shall be maintained in a natural state, including trees and open grassed areas. Site amenities, including streams, ponds, other natural areas, and open play areas are encouraged and may be included in the required percentage. Outdoor play facilities may also be counted in required percentage.*
2. *Primitive tent campsites are those campsites without electrical, water, or sewer hook-ups.*
3. *Service buildings must include lighted public restrooms and shower facilities. Such buildings shall be located no more than 350 feet to any primitive tent campsite. Such service buildings shall be maintained in a clean and sanitary condition and in good repair at all times.*

5.4 OFFICE/SERVICE USES

5.4.1 CREMATORIA [RUB, RB, LI]

A. General Standards

1. The use shall comply with all applicable public health and environmental laws and rules, and the use shall obtain and maintain all applicable licenses and permits.
2. Prior to the operation of the use, the owner/operator shall submit to the Administrator a certification by the South Carolina Department of Health and Environmental Control

(SCDHEC) that either all air quality regulations have been complied with or that no permits are required.

3. This use is prohibited within a Special Flood Hazard Area (SFHA).

B. **Separation Requirement for AR District Only:** All structures housing such uses shall be located at least 500 feet from any property line adjoining a lot or parcel under different ownership from the property on which the crematorium is located.

5.4.2 HOME OCCUPATION [AR, RR, RN, MH, LDR, MDR, UR, HDR, RMX, MX, IMX]

A. **General Standards**

1. The home occupation shall be clearly incidental and secondary to residential occupancy.
2. The use shall be carried on entirely within an enclosed structure on the premises.
3. The home occupation shall be operated by a resident of the dwelling.
4. A maximum of 25 percent of the gross floor area of the dwelling unit or 500 square feet, whichever is less, may be used for the home occupation.
5. A maximum of one full-time equivalent non-residents of the dwelling may be employed on the premises.
6. The use shall not generate pedestrian or vehicular traffic beyond that normal to the district in which it is located.
7. The home occupation shall not involve the use of any commercial vehicles and semi tractor trailers for the delivery of materials to or from the premises. Common and routine frequency for residential parcel delivery service is not prohibited.
8. No equipment or process shall be used in connection with the use which creates noise, vibration, glare, fumes, fire hazard, odors, dust, or electrical or communication interference detectable to the normal senses off the premises (in the case of a detached dwelling, off the lot; in the case of an attached unit, outside the dwelling unit). No equipment or process shall be used which creates visual or audible interference in any radio or television receiver off the premises.
9. The home occupation shall not cause an increase in the use of any one or more utilities (water, sewer, electricity, gas, garbage, etc.) such that the combined total use for dwelling and home occupation purposes exceeds a level normally expected in a residential neighborhood.

B. **Exterior Appearance**

1. Storage of goods and materials associated with the home occupation must be completely within an enclosed structure.
2. Parking areas in the front yard shall be limited to the existing residential driveway only. Additional parking may be provided in the rear yard only, but shall not include more than one non-commercial vehicle used in connection with the home occupation parked or stored on the premises.
3. No display of goods, products, services, or other advertising (except permitted signage as set forth in Chapter 7) shall be visible from outside of the dwelling.

C. **Standards for Specific Types of Home Occupations**

1. Personal Services, including cosmetic services, salons, barber shops, and non-permanent makeup services, but not including nail salons, may be permitted provided they comply with all of the following:

a. Such uses shall meet all applicable state requirements;

b. Any exterior entrance/exit to an area of the principal building shall be on the side or rear (and not the front) of the building;

c. Only 1 barber/styling chair shall be permitted;

d. No more than 2 hair drying chairs shall be permitted;

e. Only incidental sales of hair products shall be allowed on the premises;

f. Must meet all accessibly features, including restroom facilities, etc., meeting the International Building Code in accordance with the Americans with Disabilities Act;

g. No more than 1 sign identifying, or in any way pertaining to, such uses shall be permitted, and such sign shall meet all requirements of Chapter 7 of this ordinance; and

h. All barber/styling chairs and hair drying chairs shall be located together in either the main dwelling or the accessory building, not split between both.

2. No group instruction service, including but not limited to dance, music, exercise, arts, and crafts, may be provided for a group larger than 8 persons.

3. Retail sales shall be limited to the resale of handmade items grown or produced on-site such as food items, crafts, antiques, jewelry, and clothing.

D. **Uses Prohibited as Home Occupations:** The following uses are prohibited as home occupations because the nature of their operation has the tendency to impair the use and value of properties in a residential district:

1. Residential Care Facilities

2. Halfway Homes

3. Any Lodging Uses (Section 2.5.3.)

4. Kennels

5. Medical Clinic

6. Personal Services, Restricted

7. Veterinary Clinic

8. Any Commercial/Entertainment Uses (Section 2.5.3), except specifically those retail uses noted in Section 5.4.2.C.3 above.

9. Correctional Institution

10. Day Treatment Center

11. Hospital

12. Any Automotive Uses (Section 2.5.3)

13. Any Industrial/Wholesale/Storage Uses (Section 2.5.3)

14. Nail Salons

15. Barber Shops/Salons with more than one chair.

5.4.3 KENNELS, INDOOR [AR, RR, RN, RUB, NB, GB, RB, INS, LI, MX, IMX]

A. General Standards

1. The clinic or kennel must be within a completely enclosed building with no outside facilities for animals.
2. The clinic or kennel shall be designed so that sound emitted through the exterior walls, roofs, and enclosed areas where animals are treated or kept shall not exceed 45 decibels as certified by a registered architect or acoustical engineer.
3. An outdoor area for the supervised therapy and exercise of animals is permitted when such area complies with all of the following requirements:
   a. The area must meet the setback requirements for principal buildings along any property lines shared with a residential use or zone, unless the adjoining residential property is occupied exclusively by a nonresidential use or uses. No setback required in other cases.
   b. The area shall be located in the rear yard only and must be enclosed by a fence not less than 6 feet in height. The fence shall be wood, brick, or masonry block. It need not be solid.
   c. The maximum size of such area shall be 1,200 square feet.
   d. No more than 4 animals shall be present in the area at one time.
   e. The area may be used only between the hours of 8 AM and 6 PM daily, except in cases of documented emergencies.
   f. Any animal present in the area shall be accompanied by a human supervisor in the area at all times.

B. Disposal of Waste

1. All animal solid and liquid waste shall be disposed of daily in an approved septic tank or public sewerage system. All stalls, cages, and animal runs shall be cleaned daily.
2. Animal wastes shall not be stored within 150 feet of any property line or surface waters unless located indoors.

5.4.4 KENNELS, OUTDOOR [AR, RR, RN, RUB, RB, INS, LI]

A. Minimum Lot Size: The minimum lot size for such uses in the RB and LI Districts shall be 2 acres.

B. General Standards

1. Areas used for exercising or training of animals shall be securely fenced to prevent the animals from straying.
2. Any outside run shall be enclosed on at least 3 sides with a wall of cement block, or similar construction, to a height of at least 4 feet. Outside runs shall not be permitted in the front yard.
3. The kennel building shall be of masonry construction.

C. Disposal of Waste

1. All animal solid and liquid waste shall be disposed of daily in an approved septic tank or public sewerage system. All stalls, cages, and animal runs shall be cleaned daily.
2. Animal wastes shall not be stored within 150 feet of any property line or surface waters

unless located indoors.

D. **Buffering:** All such outdoor kennels and similar animal shelters shall be buffered from any adjoining residentially zoned property with a Type C buffer in accordance with Section 7.1.5.

E. **Separation Requirement:** Any building or pen housing animals, or any animal exercise area, shall be located a minimum of 500 feet from any residential use or zone and 150 feet from any street or non-residential property.

5.4.5 MEDICAL CLINIC [RUB, PB, NB, GB, RB, MX, IMX]

A. The use shall be carried on entirely within an enclosed structure on the premises.

B. The use shall not change the residential character of the dwelling for PB districts.

C. Storage of goods and materials associated with the clinic must be completely within an enclosed structure.

D. Parking must be provided in the third layer only (rearyard) for PB districts.

5.4.6 PERSONAL SERVICES, RESTRICTED [RB]

A. **Personal Services, Restricted** shall comply with the following:

1. **Separation:** A Personal Services, Restricted facility shall be a minimum of 1,000 feet from property line to property line of all Residential uses, all Civic uses, and all Educational/Institutional uses as per the Use Table in Section 2.5.3.
2. **Spacing:** The minimum spacing between one Personal Services, Restricted facility to another similar facility shall be 500 feet from property line to property line.
3. **Access:** Access shall be from an interior street within the development, not from an exterior local, collector, or arterial road.
4. **Federal, State, and other Local Permits Required:** An applicant shall obtain all permits required by the South Carolina Department of Health and Environmental Control or any other federal, state or local government department or agency that has rules and regulations governing Personal Services, Restricted uses such as tattoo or body piercing and check cashing facilities, prior to receiving a Zoning Permit from Lancaster County.

5.5 COMMERCIAL/ENTERTAINMENT USES

5.5.1 AMUSEMENTS, OUTDOOR [RUB, RB, LI]

A. **Separation Requirement:** No Outdoor Amusements shall be located closer than 250 feet to any residential district or use.

B. **Operational Standards**

1. Lighting systems shall be installed and operated in accordance with requirements of Chapter 7, General Development Standards.
2. Lights and loudspeaker systems shall not be operated between the hours of 10 PM and 8 AM the following morning.
3. Facility usage is limited to indoor activities between the hours of 10 PM and 6 AM the following morning unless special permission is received from the Administrator.
4. No equipment, machinery, or mechanical device of any kind (other than customary HVAC systems) may be operated within 200 feet of any residentially-zoned property except as needed for routine maintenance of the grounds or facility.

5. Adequate provisions shall be made for the disposal of waste products and the control of noise associated with the use.

5.5.2 BAR/TAVERN/BREW PUB [RUB, GB, RB, MX]

A. **Separation Requirement:** All new bar/tavern/brew pub in the GB and RB districts shall be located no closer than 500 feet to all Residential uses, all Civic uses, and all Educational/Institutional uses as per the Use Table in Section 2.5.3 or other existing bar/tavern/brew pub.

B. **Minimum Net Floor Area:** All bar/tavern/brew pub shall have a minimum net floor area of 1,200 square feet.

C. **Hours of Operation:** In issuing a Conditional Use permit for this use, the Planning Commission shall consider the surroundings and restrict the hours of operation of the business if they deem it warranted.

5.5.3 FOOD TRUCKS [GB, RB, INS, LI, HI, MX, IMX]

A. Food trucks can only be located on a lot containing a principal building or use and the maximum number of food trucks per lot is limited as follows:

1. Maximum of 2 food trucks on lots of ½ acre or less;
2. Maximum of 3 food trucks on lots between ½ acre and 1 acre; and
3. Maximum of 4 food trucks on lots greater than 1 acre.

B. Food trucks must be located at least 250 feet from the main entrance to any eating establishment or similar food service business, and 250 feet from any outdoor dining area, as measured from the designated location on the lot accommodating the food truck. In the event that one or more of the aforementioned uses locates within the minimum separation requirement subsequent to food truck location being approved, nothing shall prohibit the property owner from continuing to operate at the approved location until the food truck permit has expired.

C. Food trucks must be located at least 5 feet from the edge of any driveway or sidewalk, utility boxes and vaults, handicapped ramp, building entrance, exit or emergency access/exit way, or emergency call box and must not locate within any area of the lot that impedes, endangers, or interferes with pedestrian or vehicular traffic. Food trucks must be located a minimum distance of 15 feet in all directions of a fire hydrant.

D. Food trucks and associated seating, if any, must not occupy parking spaces required to fulfill the minimum requirements of the principal use, unless the principal use's hours of operation do not coincide with those of the food truck business. Such trucks and seating must not occupy parking spaces that may be leased to other businesses and uses to fulfill their minimum parking requirements and not occupy any handicap accessible parking spaces. Food trucks and associated outdoor seating must be removed from all permitted locations during impermissible hours of operation and must not be stored, parked, or left overnight on any street or sidewalk.

E. No free-standing signage or audio amplification is allowed as part of the food truck's vending operation. Outdoor seating areas associated with a food trucks vending operation are only permitted on lots 2 acres or greater in size.

F. Hours of operation are limited to the hours between 7 AM and 10 PM unless the designated location on the lot accommodating the food truck is located within 150 feet of the property line of a single-family or two-family dwelling in which case the hours of operation are limited to the hours between 8 AM and 8 PM.

G. The food truck operator or their designee must be present at all times except in cases of an emergency.

H. The food truck vendor is responsible for the proper disposal of waste and trash associated with the operation. Vendors must remove all waste and trash from their approved location at the end of each day or as needed to maintain the health and safety of the public. The vendor must keep all areas within 5 feet of the truck and any associated seating area clean of grease, trash, paper, cups, or cans associated with the vending operation. No liquid waste or grease is to be disposed in tree pits, storm drains, or onto the sidewalks, streets, or other public space. Under no circumstances can grease be released or disposed of in a sanitary sewer system.

I. With the exception of allowable outdoor seating areas, all equipment required for the operation must be contained within, attached to, or within 3 feet of the food truck, and all food preparation, storage, and sales/distribution made in compliance with all applicable County, State and Federal Health Department sanitary regulations.

J. A zoning permit must be obtained by the property owner (as listed in the Lancaster County tax records) for any lot proposed to accommodate one or more food trucks. If at any time evidence is provided that the lot is being used other than in compliance with these regulations, the zoning permit will be rendered null and void and a violation issued. This zoning permit must be required to be renewed annually.

5.5.4 GENERAL COMMERCIAL [RUB, NB, GB, RB, MX, IMX]

A. **All Districts**: Such uses located adjacent to any AR, RR, RN, MH, LDR, MDR, UR, or HDR Districts shall be subject to the following standards:

Required Buffer Yard	Type B along side and rear property lines. Type C where parking areas, dumpsters, loading docks, or other utility structures are visible from adjacent properties.
Minimum Required Setback for Buildings and Loading Dock/Service Areas	50 feet from side and rear property lines.
Maximum Height	35 feet at 50-foot setback line. 1-foot additional height may be added for every 1 additional foot in setback from property lines, up to the maximum allowed height for the district.
Facade Materials and Articulation	Building walls visible from adjacent residential properties shall be treated as primary facades.

B. **Night Club [RB]**

1. **Separation Requirement:** All new night clubs in the RB district shall be located no closer than 500 feet to all Residential uses, all Civic uses, and all Educational/Institutional uses, as per the Use Table in Section 2.5.3, or other existing public or private clubs.

2. **Minimum Net Floor Area:** All night clubs shall have a minimum net floor area of 1,200 square feet.

3. **Hours of Operation:** In issuing a Conditional Use permit for this use, the Planning Commission shall consider the surroundings and restrict the hours of operation of the business if they deem it warranted.

5.5.5 OUTSIDE SALES [RUB, NB, GB, RB, INS, MX, IMX]

A. **Applicability:** Theses standards are intended to regulate outside sales which are conducted on an everyday basis, either within a permanent open-air structure, an uncovered outdoor sales area, or on private pedestrian walkways. Outside sales which are temporary or seasonal in nature, or which are intended to be located in parking areas, shall be permitted pursuant to the standards in Section 3.12.4.

B. Permitted Location and Size

1. Outside sales shall not take up an area greater than 25 percent of the total building area of the primary use within the associated permanent structure.
2. Outside sales must be clearly secondary to the primary use within the associated permanent structure and shall generally be located to the side or rear of the principal structure.

C. Required Setbacks

1. **INS, MX, and IMX Districts:** Display of merchandise for outside sales in the front yard shall not exceed a maximum of 12 feet from the front face of the building. Such displays may be located on a private sidewalk provided that they are located on a private sidewalk abutting the principal structure and adequate pedestrian clearance on the sidewalk is maintained (minimum of 5 feet).
2. **GB and RB Districts:** Display of merchandise for outside sales in the front yard shall be no closer than 50 feet to a street unless such displays are located on a private sidewalk abutting the principal structure and adequate pedestrian clearance on the sidewalk is maintained (minimum of 5 feet).

5.5.6 OUTSIDE SALES, SIDEWALK SALES [RUB, NB, GB, RB, INS, MX, IMX]

A. Applicability: These standards are intended to regulate outside sales which are conducted on an everyday or seasonal basis on public pedestrian walkways. Outside sales which are not located on public sidewalks or walkways are regulated by Section 3.5.6.

B. Standards

1. Merchandise for sale may be placed on the public sidewalk in front of the shop where the building is directly adjacent to the sidewalk provided that adequate pedestrian clearance on the sidewalk is maintained (minimum of 5 feet). Such displays shall be removed from the sidewalk when the business is not open.
2. Sidewalk sale shall not take up an area greater than 25 percent of the total building area of the primary use within the associated permanent structure.
3. Display of merchandise for outside sales shall not exceed a maximum of 12 feet from the front face of the building.

5.5.7 PAWNSHOPS [RUB, GB, RB]

All new pawnshops shall be located no closer than 400 feet to any existing pawnshop.

5.5.8 RACETRACK [HI]

Motorized race and testing tracks are declared by this ordinance to be incompatible with residential development. Additionally, such uses have the potential of negatively impacting many nonresidential uses. As a result, all such uses shall meet the following requirements:

A. No such use shall be located within one mile of all Residential uses, all Civic uses, and all Educational/Institutional uses as per the Use Table in Section 2.5.3.

B. A Type C buffer yard shall be provided along all property lines which are adjacent to the racing/testing track and/or parking areas.

C. The site shall have direct access to either a collector or arterial street.

5.5.9 RESTAURANT [RUB, NB, GB, RB, INS, MX, IMX]

A. Kitchen Exhaust: Kitchen exhaust fans shall be located no closer than 100 feet to any existing Single Family or Two Family (duplex) dwelling.

B. Buffering: All restaurants shall be screened from existing Single Family or Two Family (duplex) dwellings by a Type C buffer yard as set forth in Section 7.1.5.

5.5.10 SEXUALLY ORIENTED BUSINESS/ADULT ESTABLISHMENT [HI]

A. Purpose

1. The Lancaster County Council finds that it is necessary to set forth the appropriate special requirements by which Sexually Oriented Business/Adult Entertainment may be established within the County's zoning jurisdiction.
2. Sexually Oriented Businesses/Adult Entertainment, because of their very nature, are recognized as having serious objectionable operational characteristics, particularly when they are located near residential areas or educational, religious, or recreational uses.
3. Studies have shown that lower property values and increased crime rates tend to accompany and are brought about by the concentration of adult establishments.
4. The County Council finds that the regulation of these uses is necessary to ensure that these adverse effects do not contribute to the blighting of surrounding neighborhoods and to protect the quality of life in Lancaster County.
5. It is not the intent of the County Council in adopting this section to suppress any activities protected by the First Amendment, but rather to enact a content neutral standard that addresses the secondary effects that adult establishments have on the County.

B. Separation Requirements

1. Such uses shall not be located closer than 5,280 feet (or 1 mile) to any of the following:
   a. All Residential uses, all Civic uses, and all Educational/Institutional uses as per Use Table in Section 2.5.3.
   b. Other adult establishment that provides adult entertainment or engages in the sale or rental of adult material as one of their principal business purposes.
   c. Designated commercial, office, or industrial park.
2. Such uses shall not be located closer than 1,320 feet (or ¼ mile) to any highway access points (on-ramps/off-ramps). The waiver of separation requirements allowance in Section 3.1.3. shall not be applicable to this requirement.

C. Buffering: Adult Establishments shall be buffered from adjoining property with a Type C buffer as set forth in Section 7.1.5.

D. Signs and Displays

1. No sexually oriented printed material, slide, video, photograph, written text, live show, or other sexually oriented visual display shall be visible from outside the walls of the establishment, nor shall any live or recorded voices, music, or sounds be heard from outside the walls of the establishment.
2. The sale or distribution of any material or related item shall be made from within the building premises (excluding mail order or catalogue sales) and shall not be displayed or otherwise advertised, exhibited, or promoted so as to be visible to the public from a public street or park.

E. Location

1. No more than one adult establishment shall be located on a parcel or in the same building, structure, or portion thereof.

2. No other principal or accessory use shall occupy the same parcel, building, structure, or portion thereof with any adult establishment.

5.5.11 SHOOTING RANGE, INDOOR [RUB, GB, RB, LI, HI]

A. **Applicability:** This use includes the shooting of firearms, bows, and cross-bows at, or in conjunction with, both for-profit and non-profit facilities. It does not include incidental target practice by individuals on private property.

B. **Noise Mitigation:** The facility shall be designed such that sound generated at the facility shall not be detectable to the normal senses at any off-site property.

C. **Shot Containment:** The range shall be designed to provide a totally controlled shooting environment that includes impenetrable walls, floor and ceiling, adequate ventilation, lighting systems, and acoustical treatment for sound attenuation suitable for the range's approved use.

D. **Design:** The design of the facility shall be guided by the design standards recommended by the National Rifle Association (NRA) for the appropriate caliber firearm(s) or weapon(s) being used on the site as described in "The NRA Range Source Book," published by the NRA, insofar as they do not conflict with any of the specific requirements contained in this section. Detailed plans for site layout, backstops, and baffles (when used for noise mitigation) shall be submitted with the application.

E. **Lead Recovery:** Firing range wastes are regulated under the Resource Conservation and Recovery Act (RCRA) and 40 Code of Federal Regulations (CFR) 260-266. These measures shall be complied with.

F. **Range Supervision:** A competent adult supervisor, approved by the owner/manager, shall be present at all times when the range is open for business.

5.5.12 SHOOTING RANGE, OUTDOOR [AR, LI, HI]

A. **Applicability:** This use includes the shooting of firearms, bows, and cross-bows at, or in conjunction with, both for-profit and non-profit facilities. It does not include incidental target practice by individuals on private property.

B. **Buffering:** A minimum 60-foot buffer, undisturbed except for fence installation and vegetative planting, must be provided around the entire perimeter of the subject property and be delineated on the site plan.

C. **Separation Requirement:** Outdoor shooting ranges shall be located no closer than 2,640 feet (or ½ mile) to all Residential uses, all Civic uses, and all Educational/Institutional uses per the Use Table in Section 2.5.3. measured from the security fence described below to the property line(s) of the aforementioned uses. In addition, the range, itself, may not cross or penetrate any public utility easement.

D. **Noise Mitigation:** The facility shall be designed such that sound generated at the facility shall not exceed the following levels (in decibels) measured at any off-site property:

Use	Decibel Level
Residential Use	55 db
Institutional Use	55 db
Commercial Use	65 db
Public Use	65 db
Public Right-of-Way	65 db
Industrial Use	75 db

E. **Shot Containment:** The range shall be designed to contain the bullets, shot, arrows, or other projectiles on the range facility.

F. Hours of Operation: The Board of Zoning Appeals may regulate these as necessary as a condition of the Special Exception.

G. Design: The design of the facility shall be guided by the design standards recommended by the National Rifle Association (NRA) for the appropriate caliber firearm(s) or weapon(s) being used on the site as described in "The NRA Range Source Book," published by the NRA, insofar as they do not conflict with any of the specific requirements contained in this section. Detailed plans for site layout, backstops, and baffles (when used for noise mitigation) shall be submitted with the application.

1. A site plan sealed by a South Carolina registered engineer must be submitted attesting that the proposed shooting range plan complies with all applicable safety and design standards for outdoor firing range provisions and live fire shoot houses set out in Section 4, Outdoor Range Design; Section 6, Live Fire Shoot House; and Attachments 1-2 through 120, of the Range Design Criteria (June 2012) as published by the U.S. Department of Energy's Office of Health, Safety, and Security for the type of shooting range proposed; except that Section 4.b(10), the words "or administrative" in the first sentence of Section 4.c(7), the second sentence of Section 4.c(7), and Section 6.a(1) do not apply to outdoor shooting ranges under this ordinance.

2. The detailed site plan must show the boundary of the subject property in its entirety and depict all discernible, existing uses and structures within 300 feet of the subject property's boundary.

3. Surface danger zones must be located entirely on the subject property and must be designed to contain all projectiles and debris caused by the type of ammunition, targets, and activities to be used or to occur on the property. The layout of the proposed range with the accompanying safety fans must be delineated on the required site plan. All firing stations must be set back at least 180 feet from all boundaries of the subject property.

H. Security: The facility shall be enclosed with a minimum 6-foot high security fence with locking gates. A sign, at least 2 square feet in size but not greater than 6 square feet, warning that a firing range is inside the fence shall be posted every 50 feet along the fence. These signs shall not count against any sign allotment as provided in Chapter 7.

5.5.13 THEATER, OUTDOOR [AR, RUB, RB, INS, OSP]

A. Buffering: Outdoor theaters shall be buffered from adjoining Residential uses with a Type C buffer as set forth in Section 7.1.5.

B. Separation Requirement: The performance and audience areas for any outdoor theater in the districts shall be located a minimum of 200 feet from any adjacent property zoned LDR, MDR, HDR, UR, or RMX.

C. Access: Primary access to all outdoor theaters in the AR, RR, RB, NMX, and IMX districts shall be to a collector or higher order street.

D. Operational Standards: Lights and loud speaker systems shall not be operated between the hours of midnight and 8 AM.

5.6 CIVIC USES

5.6.1 CEMETERY [AR, RR, RN, RUB, LDR, MDR, NB, GB, RB, INS, HDR, IMX]

A. Minimum Lot Size: A minimum of 3 contiguous acres shall be required to establish a cemetery, columbarium, or mausoleum not located on the same tract of land as a church.

B. Minimum Yard Requirements

1. The minimum yard required for all burial plots, columbariums, mausoleums, and any other structures is 30 feet from any exterior property line or the required district setback, whichever is greater. This requirement does not apply where the adjacent property contains an existing cemetery. Gatehouses shall be excluded from any minimum yard requirement provided they meet the sight triangle requirement for driveways in Chapter 6.

2. Where graves or burial plots are closer than 50 feet to an adjacent street, a low-planted screen in accordance with Chapter 7 shall be provided between the street and the cemetery.

5.6.2 EVENT VENUE/BANQUET HALL [AR, RR, RN, RUB,LDR,MDR, PB, NB, GB, RB, INS, MX, IMX]

A. In the RN, RUB, LDR, MDR, NB, GB, RB, INS, MX, AND IMX Districts

1. Minimum lot size for use shall be 5 acres and no more than one structure shall be located on the lot, not including accessory uses. Minimum lot size for use shall be 10 acres and no more than one structure shall be located on the lot, not including accessory uses for the LDR and MDR Districts.

2. Outside sound systems shall only be allowed between the hours of 10 AM and 10 PM Sunday through Thursday, 10 AM and Midnight on Friday through Saturday, and shall be in compliance with Lancaster County applicable noise ordinances.

3. Type C buffers are required along the side and rear property lines.

4. The structure shall be located a minimum of 100 feet from the adjacent property lines.

B. In the RN, LDR, MDR, and PB Districts: Maximum square footage use shall not exceed 6,000 square feet.

5.6.3 PLACES OF ASSEMBLY [AR, RR, RN, RUB, MH, LDR, MDR, PB, NB, GB, RB, INS, LI, HDR, MX, IMX]

A. In the MX and IMX Districts

1. **Prohibited Except as an Accessory Use:** Places of Assembly are prohibited from operating in a commercial or mixed-use building type except as an accessory use (less than 50 percent of the total first floor area) to an otherwise permitted use. All such operations shall be to the rear of the structure away from the public frontage or in upper stories. The use of upper stories is not limited.

2. **Operating Hours**: Commercial uses related to Places of Assembly (e.g., bookstores) must be open for business during typical business hours (from 8 AM to 5 PM on regular non-holiday weekdays) in order to be considered as a primary use.

B. In all Districts: Places of Assembly shall be buffered from adjoining residential uses with a Type B buffer in accordance with Section 7.1.5. (Ord. No. 2018-1520, 7.16.18)

5.6.4 PRIVATE RECREATION FACILITIES [RUB, NB, GB, RB, INS, MX, IMX]

A. Applicability

1. Golf courses that are a part of a residential development shall be exempt from these requirements.

2. Restaurant and/or bar uses in conjunction with a Private Recreation Facility shall require a Conditional Use (CU) permit.

B. Connectivity to Surrounding Neighborhoods: Outdoor recreation facilities shall be connected to adjacent neighborhoods to the extent practical via street connections, driveways, and/or pedestrian/bicycle paths.

C. Operational Standards

1. Lighting systems shall be installed and operated in accordance with requirements of Chapter 7 Lighting and the International Energy Conservation Code.
2. Lights and loudspeaker systems shall not be operated between the hours of 10 PM and 8 AM.
3. No equipment, machinery, or mechanical device of any kind (other than customary HVAC systems) may be operated within 200 feet of any residentially-zoned property except as needed for routine maintenance of the grounds or facility.
4. Adequate provisions shall be made for the disposal of waste products and the control of noise associated with the recreational industry.

5.6.5 PUBLIC RECREATION FACILITIES [AR, RR, RN, RUB, OSP, MH, LDR, MDR, HDR, PB, NB, GB, RB, INS, UR, RMX, MX, IMX]

A. Applicability: Golf courses that are a part of a residential development shall be exempt from these requirements.

B. Connectivity to Surrounding Neighborhoods: Such facilities shall be connected to adjacent neighborhoods to the extent practical via street connections, driveways, and/or pedestrian/bicycle paths.

C. Operational Standards: Such facilities shall conform to the following operational standards except for athletic tournaments, festivals, and other special instances as allowed by the Administrator:

1. Lighting systems shall be installed and operated in accordance with requirements of Chapter 7, Lighting.
2. Lights and loudspeaker systems shall not be operated between the hours of midnight and 8 AM the following morning.
3. No equipment, machinery, or mechanical device of any kind (other than customary HVAC systems) may be operated within 200 feet of any residentially-zoned property except as needed for routine maintenance of the grounds or facility.
4. Adequate provisions shall be made for the disposal of waste products and the control of noise associated with the recreational industry.

5.6.6 SPORTS ARENA/STADIUM [RB, INS, LI, IMX]

A. Access: Primary access to all sports arenas/stadiums shall be to a collector or higher order street.

B. Buffering: Such uses in the OSP, RB, INS, and LI districts shall be buffered from adjoining residential uses with a Type C buffer as set forth in Section 7.1.5.

C. Operational Standards

1. Lighting systems shall be installed and operated in accordance with requirements of Chapter 7, Lighting, and the International Energy Conservation Code.
2. Lights and loudspeaker systems shall not be operated between the hours of 11 PM and 8 AM the following morning.
3. No equipment, machinery, or mechanical device of any kind (other than customary HVAC systems) may be operated within 200 feet of any residentially-zoned property except as needed for routine maintenance of the grounds or facility.
4. Adequate provisions shall be made for the disposal of waste products and the control of

noise associated with the recreational industry.

5.7 EDUCATIONAL/INSTITUTIONAL USES

5.7.1 CHILD/ADULT DAY CARE HOME (5 OR LESS PERSONS) [AR, RR, RN, RUB, MH, LDR, MDR, HDR, PB, NB, GB, RB, INS, UR, HDR, RMX, MX, IMX]

A. Compliance with State Requirements: Child/Adult Day Care Homes shall meet the certification requirements of the South Carolina Department of Health and Human Service's "Adult Day Care and Day Health Services Standards for Certification" and/or the "Family Child Care Home Regulations." Such uses provide an organized program of services during the day in a community group setting.

B. Location: Child/Adult Day Care Homes shall be permitted only in a private residence occupied by the authorized operator.

C. Separation Requirement: All Child/Adult Day Care Homes shall be located at least 500 feet from another Child/Adult Day Care Home.

5.7.2 CHILD/ADULT DAY CARE CENTER (6 OR MORE PERSONS) [NB, GB, RB, INS, MX, IMX]

A. Compliance with State Requirements: Child/Adult Day Care Centers shall meet the requirements of the South Carolina Department of Health and Human Service's "Adult Day Care and Day Health Services Standards for Certification" and/or the "Child Care Center Regulations." Such uses provide an organized program of services during the day in a community group setting. Where such uses are part of a "recreation facility" offering community recreational opportunities to a wide range of age groups or residents, the day-care center may be considered part of the "recreation facility" as provided for and regulated by this ordinance.

B. Passenger Loading Space: Adequate access meeting accessibility requirements to and from the site, as well as adequate off-street space must be provided for the pickup and discharge of children and adults.

C. Child Day Care: Child day care facilities shall comply with all relevant state requirements. Child day care facilities shall also comply with the following:

1. **Outdoor Play Areas:** Outdoor play areas shall be provided and shall be safely segregated from parking, loading, or service areas.
2. **Buffering:** A landscaped hedge or solid fence shall be provided along any rear or side property line adjoining a residential lot. The hedge or fence shall be designed and/or planted to be at least 4 feet in height at maturity.
3. **Parking Area, Vehicular Circulation, and Drop-Off and Pick-Up:** The parking areas and vehicular circulation for the child day care shall be designed to:
   a. Ensure the safety of children as they arrive at and leave the facility;
   b. Provide a designated pickup and delivery area that is located in such a way that children do not have to cross vehicular travel ways to enter or exit the center and traffic congestion is minimized.

5.7.3 COMMUNITY SUPPORT FACILITY [RUB, GB, RB, INS]

Any Community Support Facility which includes facilities that provide overnight shelter shall be subject to the following additional standards.

A. Temporary Shelter Only: Lodging facilities shall be limited to temporary shelter for no more than 12 individuals for a period not to exceed 90 days.

B. Separation Requirement: No Community Support Facility with lodging facilities may be located within 1,320 feet (or ¼ mile) of another such use as measured by a straight line on a map unless as part of an accessory use to an existing religious institution.

5.7.4 CORRECTIONAL INSTITUTION [INS, LI, HI]

A. Buffering: Correctional institutions shall be buffered from adjoining property with a Type C buffer as set forth in Section 7.1.5.

B. County Jail Permitted in the INS District: The only correctional institutions allowed in the INS district shall be the Lancaster County Detention Center as operated by the Lancaster County Sheriff's Office and the South Carolina Department of Corrections.

5.7.5 DAY TREATMENT CENTERS [GB, RB, INS, LI]

A. Separation Requirement: Centers shall be located at least 100 feet from any building in residential use.

B. Hours of Operation: Centers shall not operate to serve consumers/clients on-site between the hours of 9 PM and 6 AM the following morning.

5.7.6 OPERATIONS, MAINTENANCE, AND FLEET SERVICE FACILITY [RUB, GB, RB, INS, LI, HI, IMX] (Ord. No. 2019-1607, 10.14.19)

A. Buffering: Facilities shall be buffered from adjoining Residential uses with a Type B buffer as set forth in Section 7.1.5.

B. Lighting: Canopy lighting fixtures shall be hidden inside a canopy so as not to be visible from off-site.

5.7.7 SCHOOLS – ELEMENTARY AND SECONDARY [AR, RR, RN RUB, LDR, MDR, PB, NB, GB, RB, INS, UR, HDR, RMX, MX, IMX]

A. For All Schools

1. Athletic fields and parking areas must be buffered from adjacent residentially-zoned property with a Type B buffer as set forth in Section 7.1.5.
2. Connectivity (vehicular, pedestrian, and bicycle) to surrounding residential areas is required. Where a full vehicular connection is impractical, a multi-use trail connection shall be provided for pedestrian and bicycle accessibility.

B. For Schools in the AR, RR, RN, RUB, and LDR Zones Only: To encourage walking and bicycle accessibility by schoolchildren to schools, it is incumbent upon the applicant to demonstrate how such accessibility can be achieved, given the low density nature of these districts. Accommodation may include the construction of additional off-premise sidewalks, multi-use trails/paths, or greenways to connect to existing networks.

5.8 AUTOMOTIVE USES

5.8.1 DRIVE-THRU/DRIVE-IN FACILITY [RUB,NB, GB, RB, LI, HI, MX, IMX]

A. Location

1. **NB Districts:** Such facilities shall be limited to designated parking space(s) for picking up carryout orders only. Such parking areas shall be subject to the requirements in Chapter 7.
2. **MX and IMX Districts:** Menu boards, drive-thru service windows, vehicle queuing/stacking areas, and similar facilities shall be located and accessed only in the third layer of a lot as defined in Chapter 7. In addition, such facilities shall not be located on any portion of the building facing a street frontage.

3. **GB, RB, L I, and HI Districts:** Menu boards, drive-thru service windows, vehicle queuing/stacking areas, and similar facilities located along any street frontage or on any portion of the building facing a street frontage must be buffered from the street by a low wall or hedge, minimum of 3 feet tall, and a Type B buffer as set forth in Section 7.1.5.

B. Circulation: Vehicle queuing/stacking areas for drive-thru uses shall be located outside of and physically separated from the right-of-way of any street and shall not cause interruption of any sidewalk or bicycle facility.

5.8.2 Electric Vehicle Charging Stations [AR, RR, RN, RUB, MH, LDR,MDR, PB, NB, GB, RB, INS, OSP, LI, HI, M, UR, HDR, RMX, MX, IMX]

A. General

1. Private (restricted-access) electric-vehicle (EV) charging stations are permitted as accessory uses in all zoning districts.
2. Public EV charging stations are permitted as accessory uses to allowed nonresidential uses in all zoning districts.

B. Parking

1. Electric vehicle charging stations may be counted toward satisfying minimum off-street parking space requirements.
2. Public electric vehicle charging stations must be reserved for parking and charging electric vehicles. Electric vehicles may be parked in any space designated for public parking, subject to the restrictions that apply to any other vehicle.

C. Equipment: Vehicle charging equipment must be designed and located so as to not impede pedestrian, bicycle, or wheelchair movement or create safety hazards on sidewalks.

5.8.3 HEAVY EQUIPMENT/MANUFACTURED HOME RENTAL/SALES [RB, LI, HI]

A. Screening: A Type A buffer must be maintained at all property lines and along any street frontage, except that a Type C buffer must be maintained where the property abuts Residential uses.

B. Buffers: Outdoor display/storage of vehicles shall be set back at least 50 feet from any right-of-way line, unless such display/storage of vehicles excludes any used or pre-owned vehicles, in which case the display/storage of vehicles shall not encroach into the required building setbacks. In addition, outdoor display/storage of vehicles shall not encroach into floodways or stream buffers.

5.8.4 PARKING LOT/STRUCTURE – PRINCIPAL USE [GB, RB, INS, LI, HI, MX, IMX]

Where an above-ground parking structure fronts a street, the ground level, at a minimum, shall be screened in such a way that vehicles are not visible from the streetscape or sidewalk, such as landscaping standards included in Chapter 7.

5.8.5 VEHICLE RENTAL/LEASING/SALES [RUB, GB, RB, MX, IMX]

A. Outdoor Vehicle Display: No vehicles displayed for sale or awaiting work or pick-up shall be located closer than 5 feet to any adjoining property line, within a required landscape area, or in any public rights-of-way.

B. Conditional Use Permit Required for Non-Franchised Dealerships: All such uses that are within 200 feet of a Residential use and are not a manufacturer-franchised dealership must obtain a Conditional Use permit.

C. Screening: All boundaries of a property containing such uses that directly adjoin a Single Family residential district shall be buffered with a solid fence extending from the ground to a

height of not less than 6 feet and a Type B buffer in accordance with Section 7.1.5.

D. In the MX and IMX Districts:

1. Vehicle sales are restricted to manufacturer-franchised dealerships only.
2. In new construction, or renovation to a building which amounts to greater than 50 percent of the building's value, vehicle bays shall not face the street or shall be screened from direct view by landscaping.
3. Vehicle painting and body and fender repair are specifically prohibited as service/repair functions, except by those establishments also conducting vehicle sales as restricted above.

5.8.6 VEHICLE SERVICES – MINOR MAINTENANCE/REPAIR [NB, GB, RB, LI, HI, MX, IMX]

A. Outdoor Vehicle Storage: All outdoor storage of vehicles awaiting work or pick-up shall be screened by a Type C buffer in accordance with Section 7.1.5. No vehicles or awaiting work or pick-up shall be located closer than 5 feet to any adjoining property line, within a required landscape area, or in any right-of-way. No outside storage of junk vehicles or parts shall be permitted unless a permit for an outdoor storage yard is also obtained.

B. Vehicle Bays: Vehicle bays which are not set perpendicular to the street must be screened from direct view by a hedge or other landscaping. Bays facing the street must also incorporate awnings, windows, and/or other articulation/ornamentation sufficient to reduce the impact of the repair bays on the street as determined by the Technical Review Committee (TRC).

C. Noise: No noises resulting from the occasional repair or maintenance of a motor vehicle shall be audible at or beyond the property line between 8 PM and 7 AM the following morning. Intercom/sound systems shall not be audible at or beyond the property line.

D. Repair Work: All repair work shall be conducted entirely within an enclosed structure; car wash activities may be done outside when all requirements of stormwater management are met.

E. Screening: All boundaries of a property containing such uses that directly adjoin a Single Family residential district shall be buffered with a solid fence extending from the ground to a height of not less than 6 feet and a Type B buffer.

F. Accessory Structure Location: Accessory structures such as self-service vacuum cleaners, air pumps, and other self-service structures must be setback 50 feet from any residential use and 25 feet from any right-of-way.

G. Fueling Islands: Each drive-up fueling facility permitted under this title shall have off-street driveway stacking space that shall not inhibit or impede access to or from any parking space or drive.

H. Lighting

1. Canopy lighting fixtures shall be hidden inside a canopy so as not to be visible from off-site.
2. Freestanding lighting fixtures shall not exceed 15 feet in height if the use adjoins an existing residential district or residential lot. All light fixtures shall be cutoff luminaries that block the light source from off-site view.

I. Car Wash Allowed as Accessory Use: A one-bay car wash may be allowed as an accessory use. The car wash shall meet the setbacks for the principal use and not exceed 900 square feet in area. The car wash bay shall not be oriented toward the public right-of-way. Car washes are required to have operational recycled water systems where a minimum of 50 percent of water utilized is recycled.

5.8.7 VEHICLE SERVICES – MAJOR REPAIR/BODY WORK [RUB, GB, RB, LI, HI]

A. Outdoor Vehicle Storage: No outside storage of junk vehicles or parts shall be permitted unless a permit for an outdoor storage yard is also obtained. No vehicles awaiting work or pick-up shall be located closer than 5 feet to any adjoining property line, within a required landscape area, or in any right-of-way.

B. Vehicle Bays: Vehicle bays which are not set perpendicular to the street must be screened from direct view by a hedge or other landscaping. Bays facing the street must also incorporate awnings, windows, and/or other articulation/ornamentation sufficient to reduce the impact of the repair bays on the street as determined by the Technical Review Committee.

C. Noise: No noises resulting from the repair, maintenance, or body work of a motor vehicle shall be audible at or beyond the property line between 8 PM and 8 AM the following morning. Intercom/sound systems shall not be audible at or beyond the property line.

D. Repair Work: All repair work shall be conducted entirely within an enclosed structure; car wash activities may be done outside when all requirements of stormwater management are met.

E. Screening: All boundaries of a property containing such uses that directly adjoin a Single Family residential district or street shall be buffered with a solid fence extending from the ground to a height of not less than 6 feet and a Type C buffer.

5.9 INDUSTRY/WHOLESALE/STORAGE USES

5.9.1 INDUSTRY, RESTRICTED [HI]

A. Purpose

1. The Lancaster County Council finds that it is necessary to set forth the appropriate special requirements by which Industry, Restricted may be established within the unincorporated areas of Lancaster County.
2. Industry, Restricted is having serious objectionable operational characteristics, particularly when they are located near residential areas or educational, religious, or recreational uses.
3. The County Council finds that the regulation of these uses is necessary to ensure that potential adverse effects do not contribute to the blighting of surrounding neighborhoods and to protect the quality of life in Lancaster County.

B. Permitted Location and Size

1. Such uses shall be sited on a parcel of not less than 10 acres.
2. Such uses shall be sited only in areas zoned for Heavy Industry.
3. All storage of hazardous materials shall comply with the provisions of the International Fire Code.
4. Exterior storage of hazardous materials not contained in vehicles for transportation, permanent on-site storage vessels, or containers shall be maintained so as to not create environmental hazards that may pose a threat to ground or surface water quality, air quality, wildlife, and/or humans.
5. All exterior storage of hazardous materials shall not exceed a height of 12 feet and arranged carefully to provide adequate spacing between incompatible substances as approved by the Fire Marshal.

C. Separation Requirements

1. Such uses shall not be located closer than 2,640 feet (or 1/2 mile) to any of the following:
   a. LDR, MDR, HDR, PB, NB, INS, UR, RMX, MX, and IMX Districts;
   b. All Residential uses, all Civic uses, and all Educational/Institutional uses as per the Use Table in Section 2.5.3.
   c. All essential public facilities, or other similar uses.
2. Such uses shall not be located closer than 1,320 feet (or ¼ mile) to any highway access points (on-ramps/off-ramps), except as required to gain immediate access to the facility from a road. The waiver of separation requirements allowance in Section 3.1.3 shall not be applicable to this requirement.
3. Such uses shall not be located closer than 500 feet from any floodplain or wetland area and a berm shall be constructed such that any runoff of water or other liquids will not enter the floodplain or wetland area.
4. A 6-foot high berm shall encompass the entire property where it adjoins with other properties, except on the frontage or address side of the property where it adjoins a road.
5. Such uses shall not be located closer than 600 feet to another Industry, Restricted except where a single 6-foot high berm and 6-foot high chain-link fence separates the properties and the 300-foot setback is maintained from the property line to all structures and/or roadways except necessary inspection wells and access routes to inspection wells on both properties.
6. Such uses shall not be located closer than 300 feet to any Industrial use.
7. Separation from Storage - Warehouse Indoor, Restricted and Wholesaling and Distribution, Restricted shall not be required provided the 300-foot setback is maintained from the property line to all structures and/or roadways except necessary inspection wells and access routes to inspection wells.

D. Required Setbacks

1. Such uses shall maintain a 300-foot setback from the property line to all structures and/or roadways except necessary inspection wells and access routes to inspection wells.
2. Such uses shall maintain a 300-foot setback from roads and sidewalks.

E. Screening

1. A minimum 100-foot buffer area is required along all property lines and public rights-of-way. No materials, processes, or activities, including parking, access roads, or buildings, shall occur in the buffer area. Roads for access to the site may cross the 100-foot area, and monitoring wells may be located within the 100-foot area. All existing trees within the buffer area shall be preserved, except to allow for construction of necessary road crossings and monitoring of wells.
2. A chain link security fence, a minimum of 6 feet in height, shall enclose the entire site. The fence may not be placed inside the 100-foot buffer area.

F. Vehicular Access

Vehicular access to the site shall be provided on a major or minor thoroughfare or on a road improved to necessary industrial capacity as determined by the Administrator.

G. Reclamation Plan Required

Applicant shall file with the Emergency Management, Fire Rescue, and Register of Deeds a reclamation plan for the site facilities and location. The plan shall indicate any anticipated hazardous materials, secondary materials, spent materials or sludges or other products which will required reclamation, the name of the applicant, or other entity approved by Lancaster County Council, as the owner and which shall remain the owner and liable for the site forever, or until Lancaster County Council approval is given to release this requirement.

5.9.2 JUNKYARD [HI]

A. Exemptions: These requirements shall not apply to Outdoor Storage Yards as defined in Chapter 10

B. Minimum Size: The minimum site size for sites used only for the storage of scrap metals, junk vehicles, and other salvage materials shall be 2 acres.

C. Separation Requirement: All landfill and junkyard uses must be located a minimum distance of 2,640 feet from the LDR, MDR, HDR, and UR Districts.

D. Location: No such facilities shall be located in a designated water supply watershed, special flood hazard area or wetland area, or block a natural drainage-way so that water is impounded.

E. Setbacks

1. The setbacks in the following table shall apply along all property lines and public rights-of-way for all junkyard storing activities, including parking, access roads, buildings, or disposal.

	Adjacent District	Required Setback
Sites used only for the storage of scrap metals, junk vehicles, and other salvage materials	AR, RR, RN, MH, LDR, MDR, UR, PB, HDR, RMX, MX, IMX	100 feet
	NB, GB, RB	50 feet
	LI, HI, M	50 feet

2. Roads for access to the site may cross the 100-foot area, and monitoring wells may be located within the 100-foot area. All existing trees within the buffer area shall be preserved, except to allow for construction of necessary road crossings and monitoring of wells.

F. Screening

1. A Type C buffer shall be required along all property lines and public rights-of-way regardless of the adjacent zoning. Existing plant material may be included in the computation of the required plantings, with approval of the Administrator.

2. A chain link security fence, a minimum of 6 feet in height, shall enclose the entire site. The fence must be placed inside the required Type C buffer and may be placed inside the buffer area.

G. Vehicular Access: Vehicular access to the site shall be provided on a major or minor thoroughfare or on a road improved to necessary industrial capacity as determined by the Administrator.

H. Reclamation Plan Required: Applicant shall file in the office of the Register of Deeds, prior to issuance of a Certificate of Occupancy, a reclamation plan for the reuse of the site. Such plan shall indicate that the applicant, or other entity approved by the Lancaster County Council, shall remain the owner and be liable for the site forever, or until County Council approval is given to release this requirement.

I. Burning Prohibited: No waste, junk, scrap materials, or any vehicle, including automobiles

and trucks, shall be burned on the premises.

J. Automobile Salvage Records Required: Records shall be kept on each motor vehicle and/or motor vehicle engine salvaged and stored on-site. Records shall be kept for 3 years and shall be available for inspection by the County Sherriff at reasonable times. Each record shall show the following:

1. Description of item.
2. Person or corporation from whom obtained.
3. Serial or motor number, if any.

5.9.3 LANDFILL - CLASS TWO [LI, HI]

A. Exemptions: These requirements shall not apply to the following uses or activities:

1. Landfills classified as Construction, Demolition and Land Clearing Debris and Yard Waste facilities operated in association with an active building permit on the same or adjacent parcel according to the definition for such facilities in South Carolina Solid Waste Policy and Management Act of 1991, as amended October 2000. Such facilities shall be subject to the operational requirements in Lancaster County and any other applicable State requirements.
2. **Storage:** Outdoor Storage Yards as defined in Chapter 10.

B. Minimum Size: The minimum site size for solid waste landfills shall be 150 acres.

C. Separation Requirement: All landfill uses must be located a minimum distance of 1,000 feet from all Residential uses, Civic uses, and Educational/Institutional uses.

D. Location: No such facilities shall be located in a designated water supply watershed, special flood hazard area or wetland area, or block a natural drainage-way so that water is impounded.

E. Setbacks

1. A 100-foot setback shall apply along all property lines and public rights-of-way for all landfill, including parking, access roads, buildings, or disposal.
2. Roads for access to the site may cross the 100-foot area, and monitoring wells may be located within the 100-foot area. All existing trees within the buffer area shall be preserved, except to allow for construction of necessary road crossings and monitoring of wells.

F. Screening

1. A Type C buffer shall be required along all property lines and public rights-of- way regardless of the adjacent zoning. Existing plant material may be included in the computation of the required plantings, with approval of the Administrator.
2. A chain link security fence, a minimum of 6 feet in height, shall enclose the entire site. The fence must be placed inside the required Type C buffer and may be placed inside the buffer area.

G. Vehicular Access: Vehicular access to the site shall be provided on a major or minor thoroughfare or on a road improved to necessary industrial capacity as determined by the Administrator.

H. Reclamation Plan Required: Applicant shall file in the office of the Register of Deeds, prior to issuance of a Certificate of Occupancy, a reclamation plan for the reuse of the site. Such plan shall indicate that the applicant, or other entity approved by the Lancaster County Council, shall remain the owner and be liable for the site forever, or until County Council approval is given to release this requirement.

I. **Burning Prohibited:** No waste, junk, scrap materials, or any vehicle, including automobiles and trucks, shall be burned on the premises.

5.9.4 LANDFILL – CLASS 3 [HI]

A. **Exemptions**: These requirements shall not apply to the following uses or activities:

1. Landfills classified as Construction, Demolition and Land Clearing Debris and Yard Waste facilities operated in association with an active building permit on the same or adjacent parcel according to the definition for such facilities in South Carolina Solid Waste Policy and Management Act of 1991, as amended October 2000. Such facilities shall be subject to the operational requirements in Lancaster County and any other applicable State requirements.

2. **Storage:** Outdoor Storage Yards as defined in Chapter 10.

B. **Minimum Size:** The minimum site size for solid waste landfills shall be 250 acres.

C. **Separation Requirement:** All landfill uses must be located a minimum distance of 2,640 feet from the LDR, MDR, HDR, and UR Districts.

D. **Location:** No such facilities shall be located in a designated water supply watershed, special flood hazard area or wetland area, or block a natural drainage-way so that water is impounded.

E. **Setbacks**

1. A 100-foot setback shall apply along all property lines and public rights-of-way for all landfill, including parking, access roads, buildings, or disposal.

2. Roads for access to the site may cross the 100-foot area, and monitoring wells may be located within the 100-foot area. All existing trees within the buffer area shall be preserved, except to allow for construction of necessary road crossings and monitoring of wells.

F. **Screening**

1. A Type C buffer shall be required along all property lines and public rights-of- way regardless of the adjacent zoning. Existing plant material may be included in the computation of the required plantings, with approval of the Administrator.

2. A chain link security fence, a minimum of 6 feet in height, shall enclose the entire site. The fence must be placed inside the required Type C buffer and may be placed inside the buffer area.

G. **Vehicular Access:** Vehicular access to the site shall be provided on a major or minor thoroughfare or on a road improved to necessary industrial capacity as determined by the Administrator.

H. **Reclamation Plan Required:** Applicant shall file in the office of the Register of Deeds, prior to issuance of a Certificate of Occupancy, a reclamation plan for the reuse of the site. Such plan shall indicate that the applicant, or other entity approved by the Lancaster County Council, shall remain the owner and be liable for the site forever, or until County Council approval is given to release this requirement.

I. **Burning Prohibited:** No waste, junk, scrap materials, or any vehicle, including automobiles and trucks, shall be burned on the premises.

5.9.5 MINING – MAJOR IN DEPTH RESOURCE EXTRACTION AND MINOR SURFACE RESOURCES EXTRACTION (SEE SECTION 5.9.6 AND SECTION 5.9.7)

A. **Separation Requirement:** All outdoor storage yards must be located a minimum distance of 500 feet from all Residential uses, all Civic uses, and all Educational/Institutional uses as per the Use Table in Section 2.5.3.

B. Screening

A minimum 100-foot buffer area is required along all property lines and public rights-of-way. No materials recovery and waste transfer activities, including parking, access roads, buildings, or disposal shall occur in the buffer area. Roads for access to the site may cross the 100-foot area, and monitoring wells may be located within the 100-foot area. All existing trees within the buffer area shall be preserved, except to allow for construction of necessary road crossings and monitoring of wells.

C. A mining permit shall be obtained from SCDHEC or any successor agency with authority to regulate mining prior to securing a zoning permit. The mining permit shall have been issued within six months of the date prior to the request for the zoning permit.

D. A copy of the reclamation plan as required by SCDHEC shall accompany the application as required in Chapter 9, Administration.

E. The applicant shall provide the Administrator with a copy of the approved application regarding mining/blasting activities and shall comply with all applicable requirements of S.C. Code Ann. Regs. 71-8302 et seq. as they may be amended from time to time.

F. To protect against damage to structures from vibration, in all blasting operations the maximum peak particle velocity measured in any three mutually perpendicular directions shall not exceed one inch per second at the immediate location of any dwelling, public building, school, church, or commercial or institutional building. The minimum distance shall be determined by the current weight distance formula adopted under S.C. Code Ann. Regs. 89-150 F-G as they may be amended from time to time or any SCDHEC approved alternative methods of determining compliance such as seismographic monitoring.

G. Blasting operations shall be conducted in compliance with the contiguous property setback requirements of S.C. Code Ann. Regs. 89-150 H as it may be amended from time to time, or in compliance with any variance or other approval issued by SCDHEC. For the purposes of this subsection, a contiguous property shall not include parcels under the ownerships, lease, or control of the applicant, or where the property owner has signed a written waiver of this setback requirement.

H. In accordance with the requirements of S.C Code Ann. Regs. 89-150 I as it may be amended from time to time, the SCDHEC mining permit shall specify a minimum blasting separation distance between the nearest point of blasting and any off-site structures in existence as of the date of the completed SCDHEC mine permit application.

I. Neither the maximum peak particle velocity requirement nor the minimum separation distance requirement apply to structures within the permitted area; within any area that is owned, leased, or controlled by the operator; or to any structure for which the owner has executed a waiver of damage claim.

J. Access roads/easements shall maintain a minimum travel surface of 18 feet and have a width of 30 feet at the entrance intersection with a collector or arterial street. An area on the site shall be provided to accommodate vehicles entering the site so that no traffic waiting to enter the site will be backed up onto any public or private right-of-way or easement. This area shall be designated to handle the anticipated traffic.

K. Height: No equipment shall exceed 30 feet in height above the lowest natural grade on the site.

L. Hours of Operation: The hours of operation are limited to 6:30 AM to 6:30 PM, Monday – Saturday.

M. Stormwater: The site shall be designed so that the quantity and quality of runoff reaching any surface water, on-site, or discharging off-site, shall be controlled through Lancaster County approved Best Management Practices (BMP).

5.9.6 MINING – MAJOR IN-DEPTH RESOURCE EXTRACTION [HI, M]

A. Specific to Projects Greater than Five Acres: Mining/resource extraction of over 5 acres shall comply with the following standards:

1. **Berm to Address Noise:** The site shall be bermed to ensure that the maximum noise at the property line does not exceed 65 decibels and the berm shall be located outside of the required buffers.

2. **Groundwater:** If groundwater is encountered, the following shall be demonstrated:

   a. Probable maximum pumping rates and cone of depression impacts on surrounding public and private wells and the long-term water table.

   b. The disposal method for pumped water and its effect on water quality and flooding.

   c. A study shall be done before submittal of the application to ensure pumping during the active use of the site does not result in groundwater contamination or salt-water intrusion. Monitoring wells shall be installed to monitor any groundwater pumping. If groundwater contamination or salt-water intrusion occurs, Lancaster County shall require the mine to be closed immediately and require the mine operator/landowner to undertake corrective action and pay for any damages resulting from the operation. The mine operator shall be strictly liable for any harm to adjacent lands.

3. **Additional Submittal Requirements:** The following plans shall be submitted as part of the application:

   a. **Truck Routing Plan:** A truck routing plan shall be included as part of a traffic impact analysis (see Chapter 6.3, Traffic Impact Analysis), which ensures:

      i. Truck traffic through existing residential areas is mitigated or avoided to the maximum extent practicable;

      ii. The capacity of all truck route roads to carry traffic from the site to arterial or collector roads is evaluated; and

      iii. Any substandard roads are brought up to adequate standards, both before and after mining activities, as determined by the Administrator and/or South Carolina Department of Transportation (SCDOT).

   b. **Operations Plan:** An operations plan shall identify the specific types of activities that are necessary for successful operation of the use, specific technologies that will be incorporated into the use, potential impacts on adjacent lands and mitigation measures, the size of the operation, the number of employees, and the operating hours of the use.

   c. **End Use Plan:** An end use plan shall be approved that demonstrates after completion of the mining/excavation, the site will be restored. The end use plan shall address the following:

      i. The ground surface on the site is restored to a condition permitting one of the following uses: agricultural, residential, recreation, or non-residential.

      ii. If recreation is identified as the restored use, its management is established in the end use plan.

      iii. Risks from any sub-surface materials to future restored use(s) is identified and mitigated.

      iv. If surface water will be present, likely chemical water quality shall be identified.

v. Where permanent water bodies are created as a result of surface mining, littoral shelves and wetland vegetation are encouraged to promote water quality and natural habitat.

vi. A chain link security fence, a minimum of 6 feet in height, shall enclose the entire site. The fence may be placed inside the 100-foot buffer area.

4. **Final Excavation Plan:** Where surface water features remain, or a depressed area is created during mining/excavation, a final excavation plan shall be submitted that is consistent with the end use plan and approved as part of the Certificate of Completion. The final excavation plan shall demonstrate that sufficient land will remain unexcavated and/or that the excavation will be done in a manner that allows the development to conform to this chapter's requirements without variances.

5.9.7 MINING – MINOR SURFACE RESOURCE EXTRACTION [AR, RR, RN, RUB, GB, RB, INS, LI, HI, M, RMX, MX, IMX]

A. **Specific to Projects Five Acres or Less:** Mining/resource extraction of 5 acres or less shall comply with the following standards:

1. **Maximum Depth of Excavation:** Land shall be excavated no deeper than 12 feet from existing grade.

2. **Engineer's Report Required for Disturbance Greater than 10,000 Square Feet:** Any excavation resulting in land disturbance of 10,000 square feet or greater shall provide a certified engineer's report ensuring that drainage and runoff do not adversely impact the property or surrounding properties.

3. **Truck Routing Plan:** A truck routing plan shall be submitted that ensures that truck traffic through residential areas is avoided or mitigated to the extent practicable. Any roads brought to substandard condition due to work on the site as determined by SCDOT and/or the County must be brought up to standard. At a minimum, a road must be returned to its initial condition.

4. **Noise:** Maximum noise at the property line shall not exceed 65 decibels.

5.9.8 PRIVATE RECYCLING COLLECTION STATIONS [INS, LI, HI]

A. **Separation Requirement:** All outdoor storage, collection, loading, and processing areas must be located a minimum distance of 500 feet from the LDR, MDR, HDR and UR Districts.

B. **Yard Requirements:** Recycling collection stations shall meet the minimum yard requirements for the district in which they are located.

C. **Recycling Materials:** All recyclable material must be contained within a defined area or structure and shall not be allowed to spill out into adjacent areas. The recycling collection area shall be kept clean with no accumulation of trash and debris permitted.

D. **Yard Requirements:** All aspects of the recycling collection station shall be no closer than 50 feet to adjacent property lines.

E. **Buffering:** Recycling collection stations shall be screened from the street and from adjacent properties with a Type C buffer as set forth in Section 7.1.5.

5.9.9 PUBLIC RECYCLING AND WASTE COLLECTIONS FACILITIES [RUB, INS, LI, HI]

A community waste collection and recycling facility shall comply with the following:

A. **Only Residential and Office Waste Accepted:** Only residential and office waste shall be accepted by this use. Commercial, industrial, auto or machinery generated waste shall not be accepted.

B. **Buffers:** A 100-foot wide buffer with 100 percent opacity is required around the entire

property excluding the entrance. Trash bins shall not be visible from any neighboring property or right-of-way.

C. **Cutoff Lighting:** Only cutoff lighting fixtures shall be used. If the adjacent property is residential, the height of the pole shall not exceed 15 feet from the top of finished grade level.

5.9.10 STORAGE – OUTDOOR STORAGE YARD [GB, RB, LI, HI] (Ord. No. 2018-1492, 2.12.18)

A. **Separation Requirement:** All outdoor storage yards must be located a minimum distance of 300 feet from the LDR, MDR, HDR, and UR Districts.

B. **Screening**

1. A Type C buffer shall be required in the buffer area along all public rights-of-way and property boundaries with zones other than the LI and HI districts. With approval of the Administrator, existing plant material may be included in the computation of the required plantings.

2. All stored materials shall be neatly stacked to a height that does not exceed the height of the required screen, except that those materials stored more than 100 feet from any property lines may be stacked to a maximum height of 35 feet.

3. Site plan approval is required prior to the construction of the screen. Those sides of such businesses that do not require the above-described screen shall be enclosed with a chain-link fence extending from the ground to a height of not less than 6 feet or the above-described screen.

C. **Junk, Salvage, and Scrap Materials Prohibited:** The storage of junk vehicles, scrap metal, or other salvage or waste materials shall be prohibited.

D. **Combustible Materials**

1. Gas and oil and other combustible materials shall be stored in a building of fire proof construction which shall be constructed in full compliance with all applicable provisions of the Lancaster County Code and state law.

2. All gas and oil shall be drained from vehicles stored or placed in any outdoor storage yard.

E. **Environmental Hazards:** All establishments shall be maintained so as not to create environmental hazards (such as oil or gasoline leaks or spills) that pose a threat to ground or surface water quality, air quality, wildlife, and/or humans.

F. **Exceptions For Uses Adjacent to Railroads:** Those businesses directly adjoining a railroad right-of-way or rail spur shall be exempt from the following:

1. From the screening requirements in Section 3.9.4.B.1 for those property boundaries that directly adjoin the railroad right-of-way, except that a chain-link fence extending from the ground to a height of not less than 6 feet shall still be required; and

2. From the stacking restrictions in Section 5.9.4.B.5 for all areas of the property further than 100 feet of a public right-of-way and within 400 feet of the railroad right-of-way.

5.9.11 STORAGE – SELF-SERVICE [GB, RB, LI, HI]

A. **Permitted Commercial Activities:** The owner or operator of any self-storage warehouse, or portion thereof, shall not conduct any type of commercial activity except for the following:

1. Leasing of the storage units;

2. Rental and/or sale of moving supplies;

3. Rental and/or sale of moving equipment (the rental or sale of any moving trailers, trucks,

or other vehicles shall only be permitted in districts that also permit Vehicle Rental/Sales/Leasing); and

4. Auctions or other sales of property that occur on a strictly temporary basis.

B. **Sale of Personal Goods:** It shall be unlawful for a lessee of any self-storage warehouse, or portion thereof, to sell or offer for sale any item of personal property or to conduct any type of commercial activity of any kind whatsoever, except in auctions organized by the owner or operator of the facility that occur on a strictly temporary basis.

C. **Buffering:** Such facilities must be buffered from adjacent properties with a Type A buffer in accordance with Section 7.1.5.

D. **Accessory Dwellings:** One accessory dwelling unit for a resident manager or security personnel only shall be permitted on the premises in a detached structure. No portion of any self-storage warehouse shall be used, on a temporary or permanent basis, as a dwelling unit.

5.9.12 STORAGE – WAREHOUSE, INDOOR STORAGE [GB, RB, LI, HI, IMX]

A. **Temporary Storage:** Storage within motor truck trailers, utility trailers, or similar structures is prohibited under this section except as temporary storage less than 30 days, for unloading and loading, in the rear yard only.

B. **Sale of Goods:** It shall be unlawful for any owner, operator, or lessee of any warehouse or portion thereof to offer for sale, or to sell any item of personal property, or to conduct any type of commercial activity of any kind whatsoever other than leasing of the storage units.

C. **Dwellings Prohibited:** No portion of any storage warehouse shall be used, on a temporary or permanent basis, as a dwelling.

5.9.13 STORAGE – WAREHOUSE INDOOR, RESTRICTED [LI, HI]

A. **Purpose**

1. The Lancaster County Council finds that it is necessary to set forth the appropriate special requirements by which Storage – Warehouse Indoor, Restricted may be established within the unincorporated areas of Lancaster County.

2. Storage – Warehouse Indoor, Restricted, because of the very nature, is recognized as having serious objectionable operational characteristics, particularly when they are located near residential areas or educational, religious, or recreational uses.

3. The County Council finds that the regulation of these uses is necessary to ensure that potential adverse effects do not contribute to the blighting of surrounding neighborhoods and to protect the quality of life in Lancaster County.

B. **Permitted Location and Size**

1. Such uses shall be sited on a parcel of not less than 5 acres.

2. All structures housing hazardous materials shall be of fire resistant contrition and meet applicable International Building Code requirements.

3. All storage of hazardous materials shall comply with applicable International Fire Code requirements, as amended.

4. Outside storage of hazardous materials is prohibited.

C. **Separation Requirements**

1. Such uses shall not be located closer than 1,320 feet (or ¼ mile) to any of the following:

a. LDR, MDR, HDR, PB, NB, INS, UR, RMX, MX, and IMX Districts; or

b. All Residential uses, all Civic uses, and all Educational/Institutional uses as per the Use Table in Section 2.5.3.

2. Such uses located closer than 500 feet from any floodplain or wetland area shall have a berm constructed such that any contaminated runoff of water or other liquids will not enter the floodplain or wetland area.

3. A 3-foot high berm shall encompass the entire property where it adjoins with other properties, except on the frontage or address side of the property where it adjoins a road.

4. Such uses shall not be located closer than 250 feet to any Industry, Restricted except where a single 6-foot high berm and 6-foot high chain-link fence separates the properties and the 250-foot setback is maintained from the property line to all structures and/or roadways and the 300-foot setback is maintained from the property line to any roads or structures within the Industry, Restricted zoned parcel except as required for necessary inspection wells and access routes to inspection wells.

5. Such uses shall not be located closer than 250 feet to any Industrial use.

6. Such uses shall not be located adjacent to Storage - Warehouse Indoor Restricted or Wholesaling and Distribution Restricted.

D. Required Setbacks

Such uses shall maintain a 250 feet' setback from the property line to all structures and/or roadway and from roads and sidewalks.

E. Screening

1. A minimum 100-foot buffer area is required along all property lines and right-of-way. No materials, processes, or activities, including parking, access roads, or buildings, shall occur in the buffer area. All existing trees within the buffer area shall be preserved, except to allow for construction of necessary road crossings and monitoring of wells.

2. A chain link security fence, a minimum of 6 feet in height, shall enclose the entire site. The fence may be placed inside the 100-foot buffer area.

F. Vehicular Access

Vehicular access to the site shall be provided on a major or minor thoroughfare, or on a road improved to necessary industrial capacity as determined by the Administrator.

5.9.14 WHOLESALING AND DISTRIBUTION

Wholesaling and distribution shall comply with the following:

A. Access: The use shall have direct access onto an arterial or major collector road.

B. Screening of Outdoor Storage Areas: The use shall locate outdoor storage areas to the rear of the principal structure to the maximum extent practicable and screen them with a wooden fence or masonry wall no less than 8 feet in height in accordance with Chapter 7. One evergreen shrub shall be installed for every 5 linear feet of fence or wall on the side of the fence or wall facing a neighboring property or public right-of-way.

C. The use shall be designed to ensure proper functioning of the site as related to vehicle stacking, circulation, and turning movements.

5.9.15 WHOLESALING AND DISTRIBUTION RESTRICTED [LI, HI]

A. Purpose

1. The Lancaster County Council finds that it is necessary to set forth the appropriate special requirements by which Wholesaling and Distribution Restricted may be established within the unincorporated areas of Lancaster County.

2. Wholesaling and Distribution Restricted, because of the very nature, is recognized as having serious objectionable operational characteristics, particularly when they are located near residential areas or educational, religious, or recreational uses.

3. The County Council finds that the regulation of these uses is necessary to ensure that potential adverse effects do not contribute to the blighting of surrounding neighborhoods and to protect the quality of life in Lancaster County.

B. Permitted Location and Size

1. Such uses shall be sited on a parcel of not less than 5 acres.

2. All structures housing hazardous materials shall be of fire resistant contrition and meet applicable International Building Code requirements.

3. All storage of hazardous materials shall comply with applicable International Fire Code requirements, as amended.

4. Outside storage of hazardous materials is prohibited.

C. Separation Requirements

1. Such uses shall not be located closer than 1,320 feet (or ¼ mile) to any of the following:

   a. LDR, MDR, HDR, PB, NB, INS, UR, RMX, MX, and IMX Districts;

   b. All Residential uses, all Civic uses, and all Educational/Institutional uses as per the Use Table in Section 2.5.3.

2. Such uses located closer than 500 feet from any floodplain or wetland area shall have a berm constructed such that any contaminated runoff of water or other liquids will not enter the floodplain or wetland area.

3. A 3-foot high berm shall encompass the entire property where it adjoins with other properties, except on the frontage or address side of the property where it adjoins a road.

4. Such uses shall not be located closer than 250 feet to any Industry, Restricted except where a single 6-foot high berm and 6-foot high chain-link fence separates the properties and the 250-foot setback is maintained from the property line to all structures and/or roadways and the 300-foot setback is maintained from the property line to any roads or structures within the Industry, Restricted zoned parcel except as required for necessary inspection wells and access routes to inspection wells.

5. Such uses shall not be located closer than 250 feet to any Industrial use.

6. Such uses shall not be located adjacent to Storage - Warehouse Indoor, Restricted or Wholesaling and Distribution, Restricted.

D. Required Setbacks

Such uses shall maintain a 250-foot setback from the property line to all structures and/or roadways, and from roads and sidewalks.

E. Screening

1. A minimum 100-foot buffer area is required along all property lines and public rights-of-way. No materials, processes, or activities, including parking, access roads, or buildings, shall occur in the buffer area. All existing trees within the buffer area shall

be preserved, except to allow for construction of necessary road crossings and monitoring of wells.

2. A chain link security fence, a minimum of 6 feet in height, shall enclose the entire site. The fence may not be placed inside the 100-foot buffer area.

F. Vehicular Access

Vehicular access to the site shall be provided on a major or minor thoroughfare, or on a road improved to necessary industrial capacity as determined by the Administrator.

G. Reclamation Plan Required

Applicant shall file with the Emergency Management, Fire Rescue, and Register of Deeds a reclamation plan for the site facilities and location. The plan shall indicate any anticipated hazardous materials, secondary materials, spent materials or sludges, or other products which will require reclamation, the name of the applicant, or other entity approved by Lancaster County Council, as the owner and which shall remain the owner and liable for the site forever, or until Lancaster County Council approval is given to release this requirement.

5.10 AGRICULTURE USES

5.10.1 ANIMAL PRODUCTION, GENERAL FARMS [AR, RR, RN, RUB, LDR]

A. Minimum setback requirements for keeping any horse, mule, pony, cow, sheep, goat, swine, or other livestock, including poultry, by a fence shall be 100 feet from any septic tank or private water supply intended for human consumption. (Ord. No. 2018-1514, 6.11.18)

B. Waste lagoons shall not be permitted within a flood hazard area.

C. Best management practices shall be applied in using and maintaining structures for livestock including stables, so as to eliminate or minimize nuisances and adverse impacts to the maximum extent possible.

5.10.2 ANIMIAL PRODUCTION FACILITIES, NON-SWINE [AR]

Such uses shall comply with South Carolina Code of Laws, Title 46, Chapter 45, Section 46-45-60 (Local Ordinances to Contrary Null and Void) minimum separation distances required between this use, including all buildings and structures, shall be based upon South Carolina Department of Health and Environmental Control R.61-43 (Standards for the Permitting of Agricultural Animal Facilities). All SCDHEC requirements relative to non-swine agricultural facilities are contained in part 200 of R.61-43. All requirements of R.61-43, part 200 must be met in order to obtain an agricultural permit or authorization to operate non-swine agricultural facilities from SCDHEC.

5.10.3 ANIMAL PRODUCTION FACILITIES, SWINE [AR]

Such uses shall meet the following requirements:

A. The minimum separation distance between swine operations shall be five miles including swine facilities located in adjacent counties to Lancaster County.

B. Except for the owner's residence and/or facilities used as part of the operation, including housing for farm labor, the minimum separation requirement between swine facilities and the following uses shall be as follows:

Uses	Separation Requirements
Residential Use	One half mile
Religious Institutions	One mile

Public or Private Schools and Education Facilities	Two miles
Public Parks and Recreational Facilities	One mile
Commercial and Industrial Uses	One mile
Incorporated Municipal Limits within County	Two miles
County Industrial Parks	Two miles
Public Waters Sources and Surface Water Intakes	One mile

C. All animal waste lagoons involved in swine operations shall be sited a minimum of 1,500 feet (measured in a straight line) from the property line on which the lagoon is located.

D. All animal waste lagoons involved in swine operations shall be sited a minimum of 1,500 feet (measured in a straight line) from any water supply (public or private), stream, or watercourses.

E. All animal waste lagoons involved in swine operations shall be sited a minimum of 1,500 feet (measured in a straight line) from the centerline of any public road.

F. At a minimum, the applicant shall submit, at the time an application is submitted, the following to the planning staff or review:

1. Proof of liability insurance in amount of $1,000,000.00 per occurrence during the life of operation by current owner/operator for cleanup efforts due to an accident or natural disaster causing seepage or over flow of animal waste from operation.

5.10.4 BACKYARD PENS/COOPS [MDR, PB, INS, IMX]

5.10.4.1 **Applicability:** These regulations do not pertain to the keeping of dogs or cats as pets.

5.10.4.2 **Standards for Animals**

5.10.4.2.1 **Permitted Animals:** The following small animals may be kept in the permitted districts subject to the provisions in this section:

Poultry, rabbits, or other similar small creatures.

5.10.4.2.2 **Prohibited Animals:** Exotic animals such as tigers, lions, bears, leopards, and other similar animals are not allowed in these districts or any other zoning district in Lancaster County.

5.10.4.2.3 **Location:** Permitted animals shall only be kept in the rear yard of residential lots.

5.10.4.2.4 **Enclosure:** All animals shall be kept in a fenced area, or other enclosure, sufficient to prevent their encroachment on neighboring properties.

5.10.4.2.5 Number of Animals Allowed:

Lot size	Number of animals allowed
Residential lots (1 acre-2 acres)	Maximum of 5 small animals
Residential lots (2 acre-3 acres)	Maximum of 10 small animals
Residential lots (greater than 3 acres)	Additional animals shall be permitted at the rate of 10 small animals per additional acre over 3 acres*

5.10.5 FARMER'S MARKETS AND ROADSIDE STANDS [ALL DISTRICTS]

A. Shall be located on private property. The written permission of the property owner shall be required prior to issuance of a permit for a roadside stand.

B. Minimum setbacks shall be 15 feet from any property line.

C. Signage shall meet the standards of Chapter 7. No off-premise signs shall be permitted. Signs shall be removed when the roadside stand is removed.

D. A driveway encroachment permit shall be required from the SCDOT or Lancaster County, as appropriate. Vehicle parking shall be accommodated without interfering with the safe flow of traffic on adjacent roads.

E. All display stands, shelters, etc. associated with the roadside stand shall be temporary and moveable. No permanent structures shall be permitted.

F. In addition to produce, roadside stands may also sell products such as flowers, firewood, and seafood.

G. Be operated by a governmental agency, non-profit agencies, or one or more farm producers.

H. At least 50 percent of the vendors must be farmers, fishermen, and other agricultural producers who sell produce, eggs, plants, flowers, local seafood, and other value-added farm products such as jams, jellies, and honey.

I. Shall be required to obtain a driveway encroachment permit from the SCDOT or Lancaster County, as appropriate. Vehicle parking shall be accommodated without interfering with the safe flow of traffic on adjacent roads.

J. If located on private property, must receive written permission from the property owner. If located on public property, must receive written permission from the governmental agency.

5.10.6 WINERIES

A. The minimum lot size for such uses shall be 5 acres in size.

B. The applicant shall provide a copy of an approved permit from the State of South Carolina Department of Revenue, Alcohol Beverage Licensing. All winery uses shall also comply with applicable agency requirements such as SCDHEC requirements.

C. Operational Standards

1. On-premise sale of wine and wine consumption (tasting room and accessory retail limited to 1,500 square feet, days and hours of operation limited to Monday thru Saturday from 10:00 AM to 7:00 PM).
2. Daily tours limited to Monday thru Saturday from 10:00 AM to 7:00 PM;
3. Special events, including festivals (limited to 5 special event permits per calendar year, no more than 10 consecutive days). Special events permits shall be issued only if adequate parking and sanitary facilities are provided to serve the proposed use or activity in accordance with the requirements of the UDO.

5.11 INFRASTRUCTURE USES

5.11.1 AIRSTRIP/AIRPORT [INS, HI]

Private airstrip/airports shall provide the Administrator a copy of the Federal Aviation Administration (FAA) Form 7480 prior to Zoning Permits.

5.11.2 GEOTHERMAL ENERGY SYSTEMS [ALL DISTRICTS]

A. General: Geothermal heat exchange systems are permitted as an accessory use in all zoning districts.

B. Location: Geothermal heat exchange systems must be located entirely within the lot lines of the subject property or within appropriate easements.

5.11.3 SOLAR ENERGY SYSTEMS [ALL DISTRICTS]

A. General: Accessory solar energy systems must comply with all applicable building and electrical code requirements.

B. Building-Mounted Solar Energy Systems

1. Building-mounted solar energy systems may be mounted on principal and accessory structures.
2. All applicable setback regulations apply to building-mounted solar energy systems. Systems mounted on principal structures may encroach into interior side and rear setbacks in accordance with Chapter 1.
3. Only building-integrated and/or flush-mounted solar energy systems may be installed on street-facing building elevations.
4. Solar energy systems may not extend more than 3 feet above the applicable maximum building height limit for the subject building type or more than 5 feet above the highest point of the roofline, whichever is less.

C. Ground-Mounted Solar Energy Systems

1. In residential zoning districts, ground-mounted solar energy systems may not be located in a required street setback or street yard area.
2. Ground-mounted solar energy systems may be located within required interior side and rear setbacks.
3. Ground-mounted solar energy systems are subject to applicable accessory structure height and lot coverage regulations.

5.11.4 SOLAR FARMS [AR] (Ord. No. 2018-1519, 7.16.18)

A. Applicability: The purpose of this subsection is to provide standards for fixed-panel photovoltaic solar farms consisting of ground-mounted solar panels that capture energy from the sun and convert it to electricity. The provisions of this section are based on a ground-mounted photovoltaic facility using a construction technique and panels that support the flow of rainwater between each module and the growth of vegetation beneath the arrays, thereby limiting the impacts of stormwater runoff with minimal disturbance to the existing ground and grading of the site. Based on solar farm designs, the use is low intensity with minimal trip generation, low amounts of impervious cover, and low emission thus the use is compatible in rural agricultural areas and industrial uses.

B. Setbacks/Height: Solar farms shall be setback from adjacent street right-of-way at least 50 feet. In addition, solar power plant structures must be located at least 150 feet from all residential uses. Additional setbacks may be required to mitigate noise and glare impacts or to provide designated road or utility corridors, as identified in the review process. Structures shall not exceed 20 feet in height.

C. Landscaping/Screening Requirements: In addition to setbacks, screening shall be required by providing landscape within the buffer which achieves a minimum height of 10 feet within 3 years. The intent is to provide sufficient screening, through a combination of buffers, fencing, landscaping, and/or landscaped berms to obscure the solar equipment from exterior view from adjoining property owners and public right of ways.

A visually opaque screen shall be provided for any adjacent property that is residentially zoned or residential use. An opaque screen is intended to exclude a visual contact with the solar equipment from any protected property, street or public right of way. An opaque screen may be composed of a fence, landscaping, landscaped berm, or combination thereof.

Natural areas as detailed below may also be used to meet screening requirements.

Natural areas: An existing vegetated area located on the same property as the solar farm; is within or includes the required buffer; and is of sufficient height, length, and depth and contains adequate and sufficient healthy vegetation to provide a visually opaque screen where required. The Administrator may determine that further screening improvements shall not be required.

D. **Fencing:** A security fence shall be required at least 8 feet in height to secure the solar equipment unless a taller fence is needed in order to obscure the solar equipment from exterior view; the fence can be on top of the berm in order to achieve this goal. A chain link fence shall not be allowed unless it is screened from exterior view from adjoining property owners and public right of ways; screening may include plantings to create a "living fence", or to obscure the view of the fence. Breaks in fencing may be allowed or required to facilitate wildlife needs where natural features provide appropriate barriers to access by humans for security and safety purposes.

E. **Construction and Operation:** The design, construction, and operation of the facility shall minimize soil disturbance to the maximum extent possible and shall not substantially alter drainage from the site nor prohibit continued use of the site for wildlife passage.

F. **Application Requirements:**

1. A site plan shall denote the dimensions of the parcel, proposed solar farm location (arrangement of panels), distance from the proposed area to all property lines, and location of the driveway(s). No portion of the system area may encroach into the required setbacks and any buffer area(s).
2. The site plan should also identify setbacks and any project boundary buffer(s), access routes, and proposed road improvements.
3. The site plan should show any adjacent existing inhabitable structures and residentially zoned property or residential uses; existing utilities, pipelines, and transmission lines; proposed utility lines; utility and maintenance structures; existing topographic contours; proposed grading; areas of natural vegetation removal; revegetation areas and methods; existing and proposed drainage; erosion control; any floodplains or wetlands; and other relevant items identified by the Administrator or Planning Commission.
4. Horizontal and vertical (elevation) to-scale drawings with dimensions must be submitted. The drawings must show the location of the system on the property.
5. State and local Stormwater permits may be required based upon ground cover.
6. All facilities shall be required to obtain all necessary permits from the South Carolina Department of Health and Environment Control and all applicable federal permits.

G. **Installation and Design**

1. Approved Solar Components – Electric solar energy system components must have a UL listing and must be designed with anti-reflective coating(s).
2. Compliance with Building and Electrical Code – All solar farms shall meet all requirements of the International Building Code with South Carolina Amendments.
3. Lighting – Lighting of the solar facility and accessory structures shall be limited to the minimum necessary and full cut-off lighting may be required when determined to be necessary to mitigate visual impacts.
4. Glare - No facility shall produce glare that would constitute a nuisance to occupants of neighboring properties or person traveling neighboring roads.

5. Noise - No noise shall be produced that exceeds 45 dBA, as measured at any existing neighboring residence.

6. Buffers and Landscaping – The facility must comply with Section 7.1.5 buffers and landscaping requirements.

7. Clearly visible warning signs shall be placed on the fence/facility perimeter to inform individuals of potential voltage hazards.

H. **Height Restrictions and FAA Hazard Review:** Compliance with any applicable McWhirter Field Aviation Overlay requirements and the ability to comply with FAA regulations pertaining to hazards to air navigation must be demonstrated.

I. **Decommissioning Plan:** The plan shall describe the decommissioning and final land reclamation plan to be followed after the anticipated useful life, or abandonment, or termination of the project, including evidence of proposed commitments with affected parties (County, any lessor, or property owner, etc.) that ensure proper final reclamation of the solar energy project. Among other things, revegetation and road repair activities should be addressed in the plan.

5.11.5 WIRELESS COMMUNICATIONS FACILITY [AR, RR, RN, RUB, MH, LDR, MDR, PB, NB, GB, RB, INS, LI, HI, M, UR, HDR, RMX, MX, IMX]

A. **Scope:** This section shall regulate all communications broadcasting, towers, support structures, antennas, broadcast receiving facilities and equipment, and any combination thereof, except the following:

1. Television sets.

2. AM and FM radio receivers.

3. Amateur (HAM) radio receivers and transmitters.

4. Citizen band (CB) radio receivers and transmitters, cellular telephones, pagers, and similar personal communication devices.

5. Facilities which qualify as accessory structures as per Chapter 1.

B. **Permitted Locations:** The following wireless telecommunications facilities are permitted, as outlined in Section 2.5.3 provided they meet the supplemental use standards in this section.

Height of Proposed Facility	Use Allowance	Permitted Districts	Other Permitted Locations (in any district)	Additional Standards
60' or Less And Concealed	PR	All Districts except OSP	Government facilities; Public parks and utility structures; Within any building or structure whose primary purpose is not to support communications equipment, such that the facility is completely concealed.	Setbacks shall be the same as for any principal or accessory structure in the district.
60.01' – 199.99'	PR	PB, NB, GB, RB, INS, LI, HI, M	n/a	The facility shall be camouflaged in a manner so as to reflect the characteristics of the neighborhood or its environs as approved by the Administrator.
60.01' – 199.99'	SE	AR, RR, RN,	n/a	The facility shall be

		RUB, MH, LDR,MDR,UR, HDR, RMX, MX, IMX		camouflaged in a manner so as to reflect the characteristics of the neighborhood or its environs as approved by the Board of Zoning Appeals.
200' and Over	SE	LI, HI, M	n/a	The facility shall be camouflaged in a manner so as to reflect the characteristics of the neighborhood or its environs as approved by the Board of Zoning Appeals.

C. **Prohibited Locations:** No new Telecommunications Facilities shall be permitted within 300 feet of any residential use.

D. **Co-Location:** Co-location is an arrangement whereby more than one user occupies a single tower or structure. In order to maximize the use of towers and to reduce the number of towers needed to serve the community, the following co-location requirements shall apply to all users, except accessory uses to a residence.

1. Co-location on a previously-approved tower is permitted provided that all conditions of the previously-approved permit are complied with.

2. Co-location on a building or substantial structure, such as a water tower, shall effect a waiver of any requirement, but all other applicable provisions of this section, and the ordinance, shall be met and be approved by the Technical Review Committee. The TRC may require that additional information be filed if it is in doubt as to whether or not a given proposal is in keeping with the spirit of the ordinance. In an effort to further the purpose stated above, Lancaster County encourages co-location on its facilities.

3. Where a new tower is proposed, documentation shall be required to substantiate why the proposed antenna(s) and/or equipment cannot be accommodated on a previously-approved tower due to one or more of the following reasons:

a. The planned equipment would exceed the structural capacity of previously approved towers, considering their existing and planned use, and those towers cannot be reinforced to accommodate the planned or equivalent equipment at a reasonable cost; or

b. The planned equipment would cause radio frequency interference with other existing or planned equipment for these towers, and the interference cannot be prevented at a reasonable cost; or

c. Previously approved towers do not have space on which the planned equipment can be placed so it can function effectively and reasonably in parity with the existing and/or planned equipment of the present user(s); or

d. Other reasons which make it impractical to place the planned equipment on previously approved towers. Such reasons shall be explained and documented in detail.

4. Where a new tower is proposed and sufficient reasons for a new tower exist, favorable consideration will be given to towers designed to accommodate other future users. Documentation shall be required describing the capacity of the proposed tower in terms of today's technology (including the number and type of antennas that it can accommodate). Approval of such new tower will be conditioned on space being made

available to such fixture users at a reasonable fee and any necessary costs of adapting the facilities to the proposed future use.

5. Where a new tower is proposed and sufficient reasons for a new tower exist and the tower will not be designed to accommodate other future users, documentation justifying the proposal shall be required.

6. Towers shall not be closer than 2,640 feet (or ½ mile) to another such use. This requirement may be waived upon certification by the applicant that technical needs require a closer placement and approved by the Administrator. Favorable consideration for closer placement may also be given for proposed new towers if the location where the tower and any accessory buildings are proposed can be screened by existing vegetation, land forms, or structures.

E. **Setbacks (Use Separation Requirements):** The minimum tower setback from any property line shall be:

1. Equal to the height of the tower; or

2. The Fall Zone shall be determined by an engineer certified by the State of South Carolina in a letter which includes the engineer's signature and seal. The applicant/owner of the proposed tower shall own or lease or shall benefit from an easement for the entire Fall Zone area. No Habitable Structures are allowed in the Certified Fall Zone. The only structures which will be allowed to be constructed within the Fall Zone of a tower will be those structures which are considered to be accessory to the tower. Such structures include, but are not limited to, storage, maintenance, and equipment buildings. (Ord. No. 2018-1528, 8.27.18)

3. For towers not exceeding 80 feet in height:

   a. Equal to the engineer-approved guy point distances for guy-wire-supported towers, or

   b. Equal to ½ the tower height for self-supporting towers; or

4. For a steel monopole tower with a base diameter greater than or equal to 1 foot, equal to ½ of the height of the tower, provided that a professional engineer certifies that the tower is of sufficient strength to withstand hurricane-force winds of a velocity that have occurred, or can be expected to occur, in the area, and that should winds of greater velocity occur, the design of the tower is such as to bend rather than fall; provided that in no case shall a tower in excess of 150 feet in height be setback less than 50 feet from any property line. This requirement shall not apply to communications equipment co-located on facilities located in the public right-of-way (such as telephone poles and light standards) or electric power company easements as long as all other applicable requirements of the ordinance are met. Accessory buildings and structures on lots shall meet the setback requirements for same in their district.

F. **Security:** Security fencing at least 6 feet in height shall be installed around the base of the tower or the tower shall be equipped with an engineer-certified anti-climb device. Published data or documentation for an anti-climb device must be provided to support such device and must be of such nature to enable the building inspector to easily determine that the anti-climb device has been installed in accordance with such data, otherwise a professional engineer must certify that the anti-climb device has been properly installed. This requirement shall not apply to communications equipment co-located on facilities located in the public right-of- way (such as telephone poles and light standards) or electric power company easements as long as all other applicable requirements of the ordinance are met.

G. **Signs:** No business signs, billboards, or other advertising shall be installed on the tower or security fencing.

H. Lighting: Towers shall not be artificially lighted unless required by the Federal Aviation Administration or other federal or state authority, and in no case shall exceed the required minimum. Every effort should be made to obtain waivers to FAA coloring and lighting requirements if such waivers would not affect aircraft safety. To the extent allowed by the FAA, strobes shall not be used for night time lighting. The lights shall be oriented so as not to project directly onto surrounding residential property, consistent with FAA requirements. Prior to construction of the tower, the applicant shall be required to submit documentation from the FAA that the lighting is the minimum lighting required by the FAA.

I. Abandonment: Any tower that ceases to be used for communications broadcasting and/or broadcast receiving as permitted by this ordinance for a period of more than 6 months shall be removed by the owner of the wireless communication facility. This removal shall occur within 180 days of the end of such 6-month period. Upon removal, the site shall be re-vegetated to blend with the existing surrounding vegetation.

J. Screening: Where the tower is not an accessory use and the site abuts or is visible from residentially-developed land, residential zoning districts, or a street designated as a major thoroughfare by the current Lancaster County Comprehensive Plan, except for fence and wall entrances, the security fencing described in provision 5.11.3 F, above, shall be screened with healthy plants which possess growth characteristics of such a nature as to produce within 5 years a planting screen not less than 6 feet high that will obscure objects behind the screen at a distance of 50 feet. This planting screen shall be installed within 90 days of construction of the security fencing and shall be maintained as required herein for the life of the tower. Alternatives may be permitted by the Board of Zoning Appeals based on security or other reasons without the necessity of following the variance procedure. This screening is required in addition to any other screening required by other sections of the UDO. The Board of Zoning Appeals may impose this requirement on accessory uses when appropriate. This requirement shall not apply to communications equipment co-located on facilities located in the right-of-way (such as telephone poles and light standards) or electric power company easements as long as all other applicable requirements of the ordinance are met.

K. Design

1. Site location and development shall preserve the pre-existing character of the site as much as possible. Existing vegetation should be preserved or improved, and disturbance of the existing topography of the site should be minimized, unless such disturbance would result in less visual impact of the site on the surrounding area. The effectiveness of visual mitigation techniques should be evaluated, taking into consideration the site as built.

2. Freestanding towers shall be screened, constructed, and/or colored to blend, as much as possible, with the area and the background against which they are most commonly seen.

3. The Administrator may specify the type of construction (monopole versus lattice, etc.) as a requirement of the Permit with Review in cases where it is determined that a particular type of construction is better suited for a particular area for safety and/or aesthetic reasons.

4. Towers and antennas on a building or substantial structure shall be screened, constructed, and/or colored to match the structure to which they are attached. Antennas mounted on the side of a building or structure shall be painted to match the color of the building or structure or the background against which they are most commonly seen. If an accessory equipment shelter is present, it must blend with the surrounding building(s) in architectural character or color.

5. Where an antenna or antennas are co-located on a structure such as a light standard, telephone pole, fence pole, etc., the height of the structure supporting the antenna(s) shall not exceed the average height of similar structures in the vicinity by more than 10 percent.

L. Accessory Buildings, Structures, and Uses

1. These are subject to applicable district requirements.
2. Outside storage in conjunction with these uses is permitted only in the LI and HI districts.

M. Site Plan: A site plan demonstrating compliance with these regulations and meeting the requirements of Chapter 9 must be submitted to, reviewed, and approved by the TRC.

N. Required Permits: A building permit, a zoning permit, and a planning review permit are required. No permit application shall be considered for the location of a wireless communication transmission facility on property not leased or owned or benefitted by an easement by the applicant or for which a contingent lease or purchase contract is in place. The amount of land either purchased or leased or benefitted by an easement shall be equal to the amount of land necessary to meet the Fall Zone area. To show this requirement has been met, the applicant shall provide the County with a sealed site plan clearly delineating the leased or owned or easement area and a lease agreement or deed or easement. These documents subsequently must be recorded with the Lancaster County Register of Deeds. (Ord. No. 2018-1528, 8.27.18)

5.11.6 CLASS 3 UTILITY FACILITIES [AR, RR, INS, LI, HI]

A class 3 utility facility shall comply with the following:

A. Buffers: A type C buffer yard is required for class 3 utility facilities.

(Ord. No. 2019-1634, 1.27.20)

5.12 OTHER USES

5.12.1 TEMPORARY USES [ALL DISTRICTS]

All permitted temporary uses listed in this section require a Temporary Use Permit that shall be reviewed and issued by the Administrator subject to the following requirements:

A. Separation Requirement: Except for yard sales, Christmas tree sales, and produce stands, no temporary use shall be located closer than 100 feet to a dwelling unit unless the owners of such properties provide written consent of the temporary use to the Administrator.

B. Plans for security and safety must be provided for civic/cultural events prior to receiving a Temporary Use Permit.

C. The sponsor, owner, or manager of any temporary use shall be responsible for ensuring that the site remains free of debris or waste upon the conclusion of each day's sale or use.

D. No more than one temporary use shall be permitted per lot at any given time.

E. Exemption for Annual Fairs on County, City, or School Property: Fairs or other special recreational or entertainment events which usually occur on an annual basis and are held in the following locations shall be allowed at these locations and are hereby exempt from the provisions of this section:

1. Lancaster County Fairgrounds,
2. Public parks, if authorized by the Administrator; and
3. School or college grounds, if authorized by the School Superintendent or College President.

5.12.2 TEMPORARY USES ALLOWED IN ALL DISTRICTS

Use	Maximum Duration for Each Use or Event (per site)	Permitted Location(s)
Yard or garage sales	2 days – 6 days per year maximum	Any lot with an occupied residential dwelling – No temporary use permit required
Civic/cultural events (sponsored by a governmental agency, non-profit group, or places of	30 days per year maximum – no renewal for 3 months	All districts
Christmas tree and ornament sales	45 consecutive days – no renewal within 1 year	All districts
Temporary uses associated with construction (including contractor's office, equipment/storage sheds, security watchman temporary office/residence, and mobile office space for displaced	During construction period, 1 year permit – annual renewal if warranted	All districts, subject to requirements in 5.12.4
Temporary real estate office	See 5.12.4.D below	All districts, subject to requirements in 5.12.4.D
Temporary relocation mobile homes for displaced residents	1 year, except by extension when authorized by the Administrator	Within a designated redevelopment or a disaster area, subject to requirements in 5.12.4.E
Temporary use recreational vehicle or travel trailer	1 year – up to 1 year extension when authorized by the Administrator	All districts, subject to requirements in 5.12.4.F

5.12.3 TEMPORARY USES LIMITIED TO SPECIFIC DISTRICTS

Use	Maximum Duration for Each Use or Event (per site)	Permitted Districts
Annual fairs, festivals, carnivals, or similar types of events	14 days – no renewal within 1 year	NB, GB, RB, INS, and MX
Special recreational or entertainment events	1 day – no renewal within 1 month	NB, GB, RB, INS, and MX
Outdoor bazaars and tent sales	3 days – no renewal within 6 months	NB, GB, RB, INS, and MX
Temporary food vendors on private property	90 days – no renewal within 1 month	NB, GB, RB, INS, and MX
Special sales or seasonal flea	5 days – no renewal within 6 months	NB, GB, RB, INS, and MX
Weekend flea markets**	Fridays, Saturdays, and Sundays only – annual renewal required	RB and LI only

* *When conducted exclusively as part of the permanent business or industrial use on the same lot, a Temporary Use Permit is not required. See additional standards in Section 5.12.4.C.*

** *See additional standards in Section 5.12.4.C.*

5.12.4 TEMPORARY USES WITH SPECIFIC REQUIREMENTS

A. Temporary Uses Associated with Construction

1. A contractor's office, equipment/storage sheds, security watchman's office/residence, and/or mobile office space for displaced workers may be placed in any district temporarily

on the site of construction for a development for which a Zoning Permit and Building Permit have been issued.

2. Temporary offices for displaced office workers shall be allowed only on the construction site and for the specific purpose of providing temporary relocation office space required during construction activities involving renovation, expansion, or reconstruction of an existing facility.

3. Such uses shall be located at least 5 feet from other structures and 15 feet from adjacent property lines.

4. Placement of such a temporary use is limited to a period of time determined by an estimated project completion date with the option of an extension of up to one year as if approved by the Administrator. All temporary construction buildings and trailers shall be placed on the site no earlier than 90 days prior to construction and shall be completely removed from the site within 30 days of issuance of a Certificate of Occupancy or completion of the project, whichever comes first.

B. Special Sales or Seasonal Flea Markets

1. **Exemption:** When such uses are conducted exclusively as part of a business or industrial use on their lot, parking area, or private sidewalk, a temporary use permit is not required. Such uses shall not be limited in length of time that they may be conducted except that they shall only be conducted on an occasional or seasonal basis. The standards given below for such uses shall still apply.

2. Such uses shall be conducted or authorized by an existing permanent business or industrial use which is in a permanent structure.

3. Such uses shall only be allowed on the lot with the permanent business or industrial use, except as provided in 4 below.

4. Such uses may be allowed on parking areas on the same lot as the permanent business or industrial use, or on abutting property with parking areas that serve the permanent business or industrial use.

5. Such uses may be conducted within the front yard and may include the occasional use of temporary tents, other similar structures, or vehicles used for purposes of displaying and selling merchandise, including utility or trucktrailers or trucks.

6.

C. Weekend Flea Markets

1. All such uses shall be located at least 250 feet from any MH, LDR, MDR, HDR, and/or UR district, however, this requirement shall not apply to properties located across streets/highways of 4 or more lanes or across railroad rights-of-way.

2. Other uses to be housed within the confines of the flea market (such as restaurants, amusements, storage, etc.) must comply with the district requirements for those uses.

3. Such uses may include the use of temporary tents, tables, other similar temporary structures, and/or vehicles used for purposes of displaying and selling merchandise, including trucks or utility/truck trailers. Temporary tents, tables, etc., shall be removed from the site after the close of business for the weekend.

4. Permanent accessory structures shall be limited to office and bathroom facilities.

5. No structures of any type shall be located closer than the established setbacks for the district.

6. No vehicles shall be parked closer than 5 feet to any adjoining property line.

7. There is no minimum parking requirement, but adequate turf or surfaced parking must be provided on-site, except in the IMX district.

8. Outdoor trash and recycling facilities shall be provided as otherwise required by the ordinance.

9. The site shall be maintained in a clean and orderly fashion at all times. Dumpsters and other waste containers must be emptied when full, during operating hours, and at least once a week.

10. No overnight camping shall be permitted on the flea market site.

11. An annual temporary use permit is required.

D. Temporary Real Estate Office

1. A construction trailer, temporary modular unit, or model dwelling unit may be used as a real estate sales office in a new residential development of 20 or more units or lots in a residential subdivision.

2. Temporary real estate offices in a construction trailer, temporary modular unit, or model dwelling unit shall be allowed in any new construction project in any district, provided that such structure shall be used for the sale of units within that project only.

3. Only one such temporary structure per builder or developer shall be allowed for use as a real estate sales office.

4. Temporary real estate offices in construction trailers or temporary modular units may remain on the site for no more than one year or until 80 percent of the units for the project are completed, whichever occurs first.

E. Temporary Relocation Housing: Residents displaced as a result of a natural or manmade disaster, or a publicly-sponsored redevelopment project in a neighborhood or area, shall be allowed temporary relocation housing in a mobile home or recreational vehicle provided they meet the following requirements:

1. May occupy designated disaster areas or redevelopment project areas only. Mobile homes shall only be allowed to occupy redevelopment project areas.

2. Shall be permitted for not more than two (2) years.

3. Shall be properly installed according to state requirements and connected with public utilities as set forth in Lancaster County ordinances.

4. Shall be located at least thirty (30) feet from one another or other structures.

5. Shall be accessible to public service and emergency vehicles as determined and approved by the Administrator.

6. Adequate provision shall be made for parking and waste management in compliance with County ordinances and policies.

(Ord. No. 2018-1535, 9.10.18)

F. Temporary Recreational Vehicle or Travel Trailer

1. This use is for a single temporary recreational vehicle or travel trailer (RV) located on a residential site during construction/rehabilitation of the principal building when occupied by owners of the site. This is an administratively-issued Temporary Use Permit.

2. An active building permit for the principal building on the property is a prerequisite for a permit to conduct the temporary use. A wavier may be granted by the County

Administrator for the active building permit due to issues with insurance not being resolved before pursuing the active building permit for the principal building. Progress towards completion of the project is essential in order to continue to hold this permit, and lack thereof over a period of three months or more shall be sufficient grounds for revocation of this temporary use permit. (Ord No. 2018-1535, 9.10.18)

3. The RV may be used for dwelling purposes including, but not limited to, sleeping and major cooking activities.
4. The initial permit shall cover one year (unless revoked for reasons stated above). A one-year extension may be authorized by the Administrator when circumstances merit same.
5. The RV shall be located completely on private property and shall not impede access by emergency vehicles to the property or any adjoining properties.
6. The RV shall be occupied by the owner of record of the property on which it is located.
7. Use of public utilities and disposal of waste generated by the RV shall comply with all applicable County ordinances and policies.

5.12.5 TEMPORARY USES NOT LISTED

If a Temporary Use Permit is sought for a use other than a specific use listed in the table above, the Administrator shall have the authority to determine which of the use categories above most closely resembles the use or activity in question. In the event that a particular use is not listed, and such use is not listed as a prohibited use and is not otherwise prohibited by law, the Administrator shall determine whether a materially similar use exists in this section. If the Administrator determines that a materially similar use does exist, the regulations governing the similar use shall apply to the particular use not listed. The Administrator's decision shall be recorded in writing. Should the Administrator determine that a materially similar use does not exist, this section may be amended to establish a specific listing for the use in question through the text amendment process established in Chapter 9.

6 SUBDIVISION AND INFRASTRUCTURE STANDARDS

6.1 PURPOSE AND INTENT

The purpose of this chapter is to establish criteria for the site development and subdivision of real property within the jurisdiction of Lancaster County. These standards are set forth to:

- Provide for the protection of the public health, safety, and welfare; and
- Promote the orderly growth and development of Lancaster County; and
- Provide for suitable residential and nonresidential development with adequate streets, utilities, and appropriate building sites; and
- Coordinate streets within proposed subdivisions with existing or planned streets and with other public facilities.

6.2 SCOPE AND APPLICABILITY

6.2.1 SCOPE

The provisions of this chapter shall be applicable to all land within Lancaster County.

6.2.2 SITE PLAN & SUBDIVISION APPLICABILITY

A. **Subdivision Defined:** For the purposes of this chapter, "subdivision" shall mean all divisions of a tract or parcel of land into 2 or more lots, building sites, or other divisions for the purpose of sale or building development (whether immediate or future) and shall include all divisions of land involving the construction of new streets or a change in existing streets.

B. **Statutory Exemptions:** The following are not included within the definition above, nor are they subject to the regulations of this ordinance, provided however, that any document or plat to be recorded pursuant to any such exclusion shall bear the notation: "Exempt pursuant to Lancaster County Unified Development Ordinance," and the signature of the Administrator before being presented for recordation.

1. The combination or recombination of portions of previously subdivided and recorded lots where the total number of lots is not increased, the resultant lots are equal to or exceed the Unified Development Ordinance requirements of the County, and no new street construction is involved.
2. The division of land into parcels greater than 10 acres in size where no new street construction is involved.
3. The public acquisition by purchase of strips of land for the widening or opening of streets.
4. The conveyance to lineal descendants for the purpose of dividing real estate among said lineal descendants. At such time that any lineal descendants or their successors in interest develop or build upon their respective property, the property must conform in all respects to the regulations of Lancaster County.
5. Any new lot created under a statutory exemption must have minimum road frontage of 25 feet or be assessable via a 25 feet easement.

C. **Site Plans Defined:** A site plan is an architectural and/or engineering drawing of proposed improvements for a specific lot that depicts such elements as building footprints, driveways, parking areas, drainage, utilities, lighting, and landscaping.

D. Preliminary Plat: A preliminary plat is a map or plat of a parcel of land which is to be or has been subdivided, containing sufficient data in order that a determination may be readily made as to the location, bearing, and length of every street and alley line, lot line, easement boundary line, and other boundary.

E. Conformity Required: From and after the adoption of this ordinance, no real property lying within the jurisdiction of Lancaster County shall be developed or subdivided except in conformance with all applicable provisions of this ordinance. In addition, after the effective date of this ordinance, no plat for subdivision of land within Lancaster County's jurisdiction shall be certified for recording by the Administrator until it has been submitted and approved in accordance with the provisions of this chapter.

F. Permits: Subsequent to Plat Approval and Recording

1. **Building Permits:** The building inspector shall only issue building or repair permits for any structure on a lot in a subdivision for which a plat has been approved and recorded in the manner prescribed herein.
2. **Well and Septic Tank Permits:** For any development creating more than 2 lots, permits issued by South Carolina Department of Health and Environmental Control (SCDHEC) for the installation of wells and septic tank systems must be submitted to Lancaster County Planning Department prior to plat approval and recording.
3. **Public Water and Sewer:** The utility provider must submit verification that the infrastructure has been installed by the developer and subsequently tested, inspected, and found to be in an acceptable condition. This verification must be submitted to Lancaster County Planning Department prior to plat approval and recording.

6.2.3 LAND SUITABILITY

Land subject to flooding, improper drainage, and/or erosion; land that has been used for the disposal of solid waste and not adequately mitigated; and any other land deemed by the Administrator to be uninhabitable shall not be platted for residential or commercial occupancy, nor for such other uses as may increase danger to health, life or property or aggravate the flood hazard. Such land shall be set aside for such uses as shall not be endangered by periodic or occasional inundation or shall not produce unsatisfactory living conditions.

6.2.4 REQUIRED CONFORMANCE TO LANCASTER COUNTY SPECIFICATIONS MANUAL

The Lancaster County Manual of Specifications, Standards and Design (MSSD) is located in Appendix C and is herein incorporated by reference. Conformance to the MSSD is required in addition to the standards in this ordinance.

6.2.5 OTHER RELEVANT STANDARDS FOR SITE PLANS AND SUBDIVISIONS

In addition to the standards found in this chapter, standards in the following may also apply:

- Chapter 7: General Development Standards
- Chapter 8: Natural Resources Protection

6.3 REQUIRED IMPROVEMENTS FOR ALL DEVELOPMENT

All development which does not qualify as a Minor Subdivision according to the criteria in Chapter 9 shall be required to install or construct the improvements specified in the table below. The developer shall be responsible for the installation and construction of required improvements according to the provisions of this ordinance and the South Carolina Department of Transportation (SCDOT) Access and Roadside Management Standards (ARMS) manual, except as may otherwise be specifically provided herein or by County policy or agreement.

	Zoning Districts														
Required Improvements	**AR**	**RR**	**RN**	**RUB**	**MH**	**LDR**	**MDR**	**PB**	**NB**	**GB**	**RB**	**INS**	**LI**	**HI**	**All Others**
Underground Drainage*	-	-	-	-	-	-	-	X	X	X	X	X	X	X	X
Curb and Gutter*	-	-	-	-	-	-	-	X	X	X	X	X	X	X	X
Public Water and Hydrants	-	-	-	-	-	-	X	X	X	X	X	X	X	X	X
Public Sewer	-	-	-	-	-	-	X	X	X	X	X	X	X	X	X
Street Lights	-	-	-	-	-	-	-	X	X	X	X	X	X	X	X
Street Trees	X	X	X	X	X	X	X	X	X	X	X	X	X	X	X
Paved Streets	X	X	X	X	X	X	X	X	X	X	X	X	X	X	X
Street Signs (All)	X	X	X	X	X	X	X	X	X	X	X	X	X	X	X
Underground Wiring	-	-	-	-	-	-	-	-	-	-	-	-	-	-	-
Park/Open Space	X	-	-	-	X	X	X	-	-	-	-	X	-	-	X
Sidewalks (also see 6.7.1)*	-	-	-	-	-	X	X	X	X	X	X	X	-	-	X

* Administrator may wave required improvements with use of approved Low Impact Development Infrastructure.

6.4 CONNECTIVITY

6.4.1 GENERAL

The arrangement, character, extent, width, grade and location of all streets shall be considered in their relation to existing and planned streets, to topographical conditions, to public convenience and safety, and in their appropriate relation to the proposed use of the land to be served by such streets. The proposed street system shall be designed to provide vehicular interconnections in order to facilitate internal and external traffic movements in the area, improve access/egress for neighborhoods and communities, provide faster response time for emergency vehicles, and improve the connections between neighborhoods and communities. Street arrangements shall not be such as to cause hardship to the owner of adjoining property in platting their own land and providing convenient access to it.

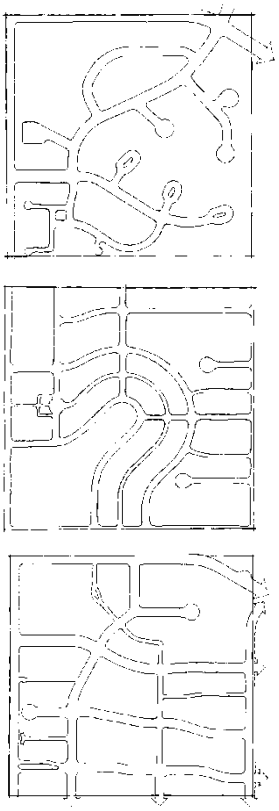

The images at left illustrate three conceptual subdivision layouts. The top image is an example of a poor layout with too few connections and many dead ends. The lower two images show improved street layouts with the required connections and a network of streets. (Diagrams courtesy of Fort Collins, Colorado)

A. Block Lengths: Block lengths shall adhere to the standards in the following table:

	Minimum Block Length	Maximum Block Length
Rural & Transitional Districts*	240 feet	1,000 feet
Neighborhood Mixed Use Districts*	240 feet	600 feet

**District classifications are outlined in Chapter 2.*

B. Block Width: Blocks shall have sufficient width to provide for 2 tiers of lots of appropriate depth except where otherwise required to separate residential development from through traffic.

C. Through-Block Connections: A pedestrian/bicycle accessway shall be required near the center and entirely across any block in excess of 800 feet in length where deemed essential by the Administrator to provide adequate access to any school, shopping center, church, park, or transportation facility (such as a greenway, sidewalk, or bike lane). Such connections shall be owned and maintained by an approved homeowner's association.

D. Cul-de-Sac: In general, streets with one end permanently closed shall be avoided unless the design of the subdivision and the existing or proposed street system in the surrounding area clearly indicates that a through street is not essential at the location of the proposed cul-de-sac. In instances where permanent dead-end streets or cul-de-sacs are permitted, they must adhere to the following requirements:

1. **Maximum Length:** 800 feet, measured from the point of street centerline intersection to the center point of the cul-de-sac, and no more than 20 lots.
2. **Turnaround Dimensions:** The closed end of such streets shall be designed with turnaround dimensions in accordance with Appendix C, MSSD.
3. **Cul-de-sac Connections:** For the purposes of meeting the connectivity index requirements in Section 6.4.3.A, credit for 1 additional segment shall be given when a pedestrian/bicycle accessway is provided between the following:
   a. Two permanent cul-de-sacs, or
   b. A cul-de-sac and any school, shopping center, church, park, or transportation facility (such as a greenway, sidewalk, bike lane, etc.)

E. Street Jogs Prohibited: Street jogs with centerline offsets of less than 150 feet shall not be permitted.

F. Reserve Strips Prohibited: Reserve strips and non-access easements adjoining street rights-of-way for the purpose of preventing access to or from adjacent property, and half-streets, except those required to prevent access to thoroughfares, shall not be permitted.

G. Street Width Transition: Where a proposed street extends an existing street of a different width than what is required by this section, the width transition shall be made within the first block of the proposed development, but in no instance less than the distance specified by the standards of the South Carolina Department of Transportation (SCDOT). Said standards are those contained in the latest edition of "A Policy on Geometric Design of Highways and Streets" by the American Association of State Highway and Transportation Officials (AASHTO).

H. Access to Major or Minor Thoroughfares: Where a subdivision borders an existing or proposed Major or Minor Thoroughfare, no direct driveway access shall be permitted to such facilities from the lots within the subdivision.

6.4.2 EXTERNAL CONNECTIONS

A. Minimum Street Connections: External street connections shall be provided at the rate of one for every 1,000 linear feet, or fraction thereof, of abutting property lines. Such connections shall be in the form of connections to existing streets or street stubs to adjacent undeveloped properties.

1. **New Street Stub Prioritization:** When street stubs to undeveloped properties are provided in order to satisfy the minimum external street connection requirement, the following connections shall be prioritized:

   a. Adjacent parcels 20 acres or greater,

   b. Adjacent parcels that abut or are traversed by existing or proposed thoroughfares.

   c. Where any adopted transportation or land use plan recommends a street connection.

2. **Permanent Barricades:** Permanent barricades shall be provided at the end of all street stubs.

3. **Alternate Compliance:** When the Administrator deems a required external street connection impractical due to severe topography, existing development, or other natural features, the County may require pedestrian/bicycle accessways in lieu of the required street connection(s).

B. Continuation of Existing Street Stubs: New development shall connect to and continue streets from any existing street stubs on adjacent properties.

C. Additional Connections to Greenways and Parks: When lots abut greenways, parks and open space areas, dedicated pedestrian/bicycle accessways must be provided to such features at a minimum of one accessway for every 900 linear feet, or fraction thereof, of abutting property lines.

6.4.3 INTERNAL CONNECTIONS

The internal connectivity of a subdivision or development shall be evaluated using the connectivity index requirements below. A connectivity index is a ratio of the number of street segments divided by the number of street nodes. Nodes exist at street intersections as well as cul-de-sac heads. Segments are the stretches of road that connect nodes. Stub outs shall also be considered as segments, but street segments on existing adjacent streets that are not part of the proposed subdivision are not included in the connectivity index calculation.

A. Minimum Connectivity Index: All development for which new streets are being constructed shall be required to achieve a minimum connectivity index of 1.3 unless the Administrator determines that compliance with this requirement is practically impossible due to topography, existing development, and/or natural features.

B. Alternate Compliance: In the event that this requirement is waived, as provided for in 6.4.3.A above, a 6-foot pedestrian trail and access easement shall be provided to link any cul-de-sac with the nearest adjacent street or pedestrian greenway.

C. Illustration: The illustration at right provides an example of how to calculate the index. Example 1 does not meet the minimum connectivity index requirement. Example 2 illustrates a subdivision design with the same number of nodes that is in compliance with the minimum connectivity index requirement.

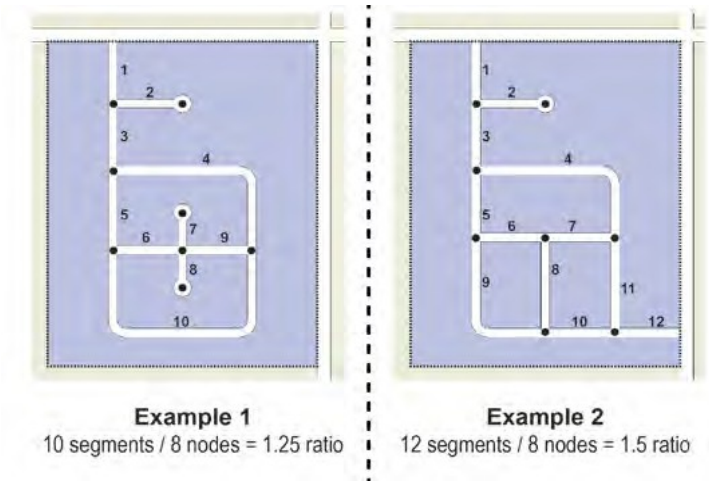

6.4.4 TRANSIT CONNECTIONS AT PEDESTRIAN AND EMPLOYMENT CENTERS

Projects located within Pedestrian and Employment Centers on the Future Land Use Map and for projects within mixed-used districts shall be reviewed by the Technical Review Committee (TRC) for the identification of well-located spaces for future potential transit needs.

6.4.5 PROPOSED NEW STREETS

Where a proposed subdivision or development includes a new street, the developer shall plat and construct the street in accordance with one of the preferred street sections outlined in the this ordinance and in accordance with Appendix C, MSSD. The street classification chosen shall be approved by the Administrator and shall reflect the expected intensity of land uses fronting the proposed street and the needs of the surrounding street network.

6.4.6 EXISTING SUBSTANDARD STREETS

Development along existing streets of inadequate right-of-way shall provide additional right-of-way as follows:

A. Improvements Specified in the County Street Classifications: Development along existing streets shall dedicate additional right-of-way where necessary to meet the minimum widths specified in this ordinance and in accordance with Appendix C, MSSD.

B. Installation of Required Street Improvements: The developer shall install all required street improvements that occur outside the planned vehicular travel lanes, including but not limited to, street trees, planting strips and/or tree wells, and sidewalks.

6.5 COUNTY STREET CLASSIFICATION AND DESIGN

The following standards are intended to provide general clarity for most conditions in Lancaster County. Deviations to these standards may be granted by the Administrator subject to generally accepted safety and engineering practices. For additional guidance, the County will use the United States Department of Transportation Federal Highway Administration's "Accommodating Bicycle and Pedestrian Travel: A Recommended Approach".

6.5.1 RULES FOR ASSIGNMENT OF APPROPRIATE STREET DETAILS

Illustrations for various street details may be found in Appendix C. Care should be taken to ensure that context plays a primary role in the selection of the various right-of-way elements.

A. **Rights-of-Way:** The right-of-way should be the minimum required to accommodate the street, median, planting strips, sidewalks, utilities, and maintenance consideration.

B. **Measurement of Pavement Area Details:** The dimensions established in Appendix C, MSSD for lane widths, sidewalks, bike lanes, and parking lanes indicate the required face-of-curb to face-of-curb measurement, or to the edge of pavement for roadways with open drainage.

C. **Turn Lanes:** Dedicated right turn lanes, where required, may be taken from the parking lane.

D. **Street Signs:** The developer shall reimburse Lancaster County for the placement of all regulatory and street name signs in the development. Proposed street names and number systems will be reviewed by the Administrator and Lancaster County Emergency Services. No duplicate/similar names are allowed as determined by these agencies.

6.5.2 COUNTY STREET CLASSIFICATIONS

All streets, public or private, shall comply with the preferred arrangement and design specifications indicated in this ordinance and in conformance with Appendix C, MSSD. Street sections may deviate from these standards where topographic and environmental conditions necessitate, as determined by the Administrator.

Street Classification: The list below indicates which of the Appendix C, MSSD street sections correspond to the classifications established in the Comprehensive Plan Transportation Element:

A. **Arterials:** Highways 5, 9, 160, 521, and 601

B. **Collectors:** Highways 75, 97, 200, 265, 522, 903, Jim Wilson Road, Harrisburg Road, and W. Rebound Road

6.6 SIDEWALKS AND OTHER PEDESTRIAN FACILITIES

6.6.1 SIDEWALKS

A. **General Standards/Location:**

1. Where required by Section 6.3, sidewalks shall be provided according to the classification of the existing or proposed street as designated in Appendix C, MSSD.
2. Alternative facilities or payments in lieu may be considered in accordance with C and D below.

B. **Design Standards:**

1. Where existing sidewalk abuts an area where new sidewalk is to be developed, the new sidewalk shall be the same width as the existing sidewalk or meet the standards of the Appendix C, MSSD, whichever width is greater.

.

2. Multi-family and commercial developments shall provide sidewalks for the interior movement of pedestrians and to connect the sidewalk system to building entrances and parking areas.

3. Within commercial areas and places with high pedestrian volumes, sidewalks should be designed to meet the anticipated pedestrian/traffic volume as well as accommodate outdoor seating areas.

4. Sidewalks shall be constructed of concrete or other approved materials (such as pavers) and built in accordance with Appendix C, MSSD.

5. Where a planting strip cannot be provided due to right-of-way, topographic, or existing building constraints, and therefore the sidewalk must be located immediately adjacent to the curb, the minimum required width of the sidewalk shall increase by one foot. Where, due to similar constraints, a sidewalk abuts a landscape or building wall of any kind, the minimum sidewalk width shall increase by one foot.

6. Where a multi-use path or greenway is planned in the Lancaster County Carolina Thread Trail Master Plan and is located within the street right-of-way, such facilities shall be constructed in lieu of a normal sidewalk.

C. **Alternative Compliance:** Alternative provisions for pedestrian movement meeting the intent of this section may be used where unreasonable or impractical situations would result from application of these requirements. Such situations may result from significant street trees, impending road widening, topography, utility easements, lot configuration, or other unusual site conditions. In such instances, the Administrator may approve an alternate plan that proposes different pedestrian amenities provided that the intent of this section is fulfilled.

D. **Exceptions:** The Administrator may approve an exception where any one or a combination of the following factors render compliance impractical:

1. Steep slopes; and/or

2. Absence of existing sidewalks along the corridor and in the general neighborhood.

6.6.2 PEDESTRIAN / BICYCLE ACCESSWAYS

Where pedestrian/bicycle accessways are required, such facilities shall meet the following minimum requirements:

A. **Pavement Width:** 6 feet

B. **Easement Width:** 10 feet

C. **Surface Materials:** The surface of accessways shall be constructed of a smooth, compactable material that is accessible for wheelchairs and strollers. Acceptable materials include asphalt, concrete, and crushed stone.

6.6.3 GREENWAYS

Where greenways, are required by this ordinance, the Lancaster County Carolina Thread Trail Master Plan, or any other adopted plans, such facilities shall meet the following minimum requirements:

A. Pavement Width: 10 feet

B. Easement Width: 15 feet

C. Connections: Greenway stubs at property lines should be placed in areas that are easily accessible for future connectivity through adjacent parcels.

D. Surface Materials: Compact gravel, concrete, asphalt, or other material approved by the Administrator.

6.6.4 PEDESTRIAN CROSSWALKS

Mid-block crossings, bulb-outs, raised crosswalks, and similar crossing techniques should be commonly used to accommodate pedestrians when appropriate for traffic conditions and site specific situations as directed by the Administrator. All designs shall be consistent with an approved development master plan, site plan, or subdivision plat.

A. Curb Ramps: Wherever sidewalks, pedestrian/bicycle accessways, greenways, or other pedestrian facilities intersect streets with curb and gutter drainage, curb cuts and ramps commonly used to provide accessibility for persons with disabilities shall be provided. Where sidewalks are not required, the curb return shall be depressed to allow for the future connection of curb ramps.

B. Midblock Crosswalk: A pedestrian crosswalk not less than 10 feet in width shall be required across any street segment in excess of 800 feet in length where deemed essential by the Administrator to provide adequate access to any school, shopping center, worship center, park, or transportation facility. When required such crosswalks shall utilize ladder striping to enhance their visibility.

6.7 BICYCLE FACILITIES

- **Facilities Designated by Adopted Plans:** Bike lanes or separate off-street multi-use paths shall be installed on developer-built or modified roadways where designated for such by the Carolina Thread Trail Lancaster County Master Plan and any other adopted plans.
- **Reservation Required:** Where a proposed development is adjacent to required bikeway facilities as outlined above, but does not include the construction of new streets, or the modification of existing streets, the developer shall reserve right-of-way and/or easement sufficient to accommodate the appropriate bikeway facility. Refer to Chapter 4, Carolina Thread Trail Overlay District.
- **Design Standards:** Bike lanes and bike paths shall be designed according to the AASHTO Guide for the Development of Bicycle Facilities published by Federal Highway Administration and shall include all appropriate signage and pavement markings. Variations from the standards may be allowed subject to approval from the Administrator based on the standards below.

6.8 TRANSPORTATION IMPACT ANALYSIS (TIA)

The intent of this section is to provide the information necessary to allow decision-makers to assess the transportation implications of traffic associated with a proposed development, to address the transportation-related issues associated with development proposals that may be of concern to neighboring residents, business owners and property owners, and to provide a basis for negotiation regarding improvements and funding participation in conjunction with an application for development.

A Traffic Impact Analysis will be required for any land use plan amendment, amendment to the zoning map, subdivision, special exception permit, rezoning or site plan under the following described condition:

The proposed development will generate more than 50 peak hour cumulative trips per day at full occupancy, according to most current versions of the ITE Trip Generation Informational Report.

Land Use	50 Peak Hour Trips*
Single Family Home-Residential Detached	45 units
Apartments	75 units
Condominiums/Townhouses	95 units
Mobile Home Park	85 units
Shopping Center – Gross Leasable Area (GLA)	3,000 sq. ft.
Fast Food Restaurant With Drive-In – Gross Floor Area-(GFA)	1,500 sq. ft.
Gas Station with Convenience Store	4 fueling positions
Banks w/drive-in (GFA)	1,000 sq. ft.
General Office	33,500 sq. ft.
Medical/Dental Office	14,500 sq. ft
Research & Development	35,500 sq. ft.
Light Industrial/Warehousing (GFA)	92,500 sq. ft.
Manufacturing Plant (GFA)	72,000 sq. ft.

*Rates/Equations used to calculate above thresholds are for the P.M. Peak Hour of the adjacent street.

6.8.1 TRAFFIC IMPACT ANALYSIS PREPARATION

Traffic impact analysis shall be prepared by a Licensed South Carolina Professional Engineer or AICP Certified Transportation Planner (CTP) and shall conform to the requirements of SCDOT publication "Access and Roadside Management Standards", Latest Edition, Section 3C-2.1, impact studies. The applicant shall coordinate with the SCDOT and local road authorities to determine whether planned roadway or intersection improvements affect the capacity of the roadway or designs of roadways or access points proposed by the applicant.

The standards for traffic service that shall be used to evaluate the findings of traffic impact studies are:

A. For collector or local streets, a Level-of-Service (LOS) "C" or better shall be maintained. On any arterial or higher order street a LOS "D" or better shall be maintained. Level of service will be measured for segments and intersections using ITE standards for LOS calculation. Where the existing LOS is below these standards, the traffic impact analysis shall identify those improvements required to ensure that development related traffic demands result in no net reduction in LOS, and identify additional improvements needed to raise the level of service to

the standards on the applicable street to the adopted LOS standard.

B. The number and spacing of access points shall comply with applicable County, State, and AASHTO standards.

C. Average Daily Traffic (ADT) on residential streets shall be within the ranges outlined for the class of street involved. No non-residential development shall increase the traffic on a residential street with at least 300 average daily trips by more than 25 percent.

D. On-site vehicle circulation and parking patterns shall be designed so as not to interfere with the flow of traffic on any street and shall accommodate all anticipated types of site traffic.

E. Access points shall be designed to provide for adequate sight distance and appropriate facilities to accommodate acceleration and deceleration of site traffic.

F. Details shall be provided on curb space use on streets along the edge of the development site when it is intended that such areas be used for parking, parking space access, delivery and loading zones, passenger zones, taxi cab stands, bus stops, fire zones, and/or other official/emergency zones. This review shall include a description of existing conditions prior to development, and proposed changes resulting from the development, including a description of any loss or gain in curb space use by the activities intended.

6.8.2 TRAFFIC IMPACT ANALYSIS CONTENT

A traffic impact analysis shall contain information addressing the factors listed below:

A. The report shall contain illustrations and narrative that describe the characteristics of the site and adjacent land uses as well as expected development in the vicinity which will influence future traffic conditions. A description of the proposed development including access plans, staging plans and an indication of land use and intensity, shall be provided.

B. The analysis shall identify the geographic area under study and identify the roadway segments, critical intersections, and access points to be analyzed. The applicant shall meet with the County Engineer and Planning Manager to establish the study area prior to conducting the study. At a minimum, the study shall encompass all site access points, all intersections adjacent to the site, and the first signalized intersection along each road serving the site, provided that the intersection is no further than three miles from the site. The criteria that define the scope for each TIA may vary depending on the size and type of development. Additional factors may be added to the study by the Administrator if there are known areas of concern that may be impacted by the development, including but not limited to existing congested areas and existing residential development.

C. The report shall contain a summary of the data used in the analysis of existing traffic conditions, including:

1. Traffic count and turning movement information, including the sources, dates and times of traffic count information used in the report;

2. Correction factors that were used to convert collected traffic data into representative design hour traffic volumes;

3. Roadway characteristics, including the design configuration of existing or proposed roadways, existing traffic control measures (speed limits, traffic signals, etc.) and existing driveways and turning movement conflicts in the vicinity of the site; and

4. The existing LOS for roadways and intersections without project development traffic using methods documented in the Special Report 209: Highway Capacity Manual, published by the Transportation Research Board, or comparable accepted methods of evaluation. LOS shall be calculated for the weekday peak hour and, in the case of uses generating high levels

of weekend traffic, the Saturday or Sunday peak hour as determined by the Administrator. In addition, consideration should be given to the peak hours for school traffic impact.

D. The report shall identify the horizon year(s) that were analyzed in the study, the background traffic growth factors for each horizon year, and the method and assumptions used to develop the background traffic growth. Unless otherwise approved by the Administrator, the impact of development shall be analyzed for the year after the development is expected to be at full occupancy.

E. The report shall identify projected design hour traffic volumes for roadway segments, intersections or driveways in the study area, with and without the proposed development, for the horizon year(s) of the study.

6.8.3 TRAFFIC IMPACT ANALYSIS REVIEW AND APPROVAL

Following initial completion of a traffic impact analysis, the report shall be submitted to the Planning Manager for distribution to the staff of all jurisdictions involved in the construction and maintenance of roadways serving the development. Staff shall complete an initial review to determine the completeness of the report and shall provide a written summary to the applicant outlining the need for any supplemental study or analysis to adequately address any deficiencies. A meeting to discuss the contents and findings of the report and the need for additional study may be requested by the applicant.

Following a determination that the technical analysis is complete, staff shall prepare a report outlining recommendations that have been developed to address the findings and conclusions included in the study regarding the proposed development's access needs and impacts on the transportation system.

In the case of a traffic impact analysis showing deficiencies requiring mitigation within the public right-of-way, negotiations based on the conclusions and finding resulting from the traffic study shall be held with the County Administrator, County Attorney, and Planning Director. A Mitigation Agreement, detailing the applicant's responsibilities and the County's responsibilities for implementing identified mitigation measures, shall be prepared following the negotiations for final contractual action by County Council and the applicant.

If staff finds that the proposed development will not meet applicable service level standards, staff shall recommend one or more of the following actions by the public or the applicant:

A. Reduce the size, scale, scope, or density of the development to reduce traffic generation.

B. Divide the project into phases and authorize only one phase at a time until traffic capacity is adequate for the next phase of development.

C. Dedicate right-of-way for street improvements.

D. Construct new streets.

E. Improve intersection design and/or signalization.

F. Redesign ingress and egress to the project to reduce traffic conflicts.

G. Alter the use and type of development to reduce peak hour traffic.

H. Reduce background (existing) traffic.

I. Eliminate the potential for additional traffic generation from undeveloped properties in the vicinity of the proposed development.

J. Integrate non-vehicular design components (such as pedestrian and bicycle paths or transit improvements) to reduce trip generation.

K. Recommend approval of the development contingent upon making improvements or

addressing items required to mitigate traffic and access issues and impacts.

L. Contribute to an improvement that provides needed capacity, is on the capital improvements program, or is approved to be added to the capital improvements program.

M. Recommend denial of the application for development for which the traffic study is submitted.

6.8.4 ACCESS MANAGEMENT

A. Curb Cuts and Parcel Access:

1. All curb cuts, including both public and private streets, shall adhere to the standards set forth by the South Carolina Department of Transportation ("SCDOT"), and shall comply with the requirements set forth in the latest edition of the Access and Roadside Management Standards ("ARMS Manual") as published by the SCDOT Traffic Engineering Division. At a minimum, within the Highway Corridor Overlay District, curb cuts along the corridor right-of-way shall be limited to one every 300 feet of street frontage. A greater distance of separation may be required as justified by a Traffic Impact Analysis or the SCDOT ARMS Manual;

2. Individual parcels having 300 or more feet of corridor frontage may be permitted additional points of access provided they comply with the Highway Corridor Overlay District and are justified by a Traffic Impact Analysis or review by SCDOT;

3. Access points for parcels 5 acres or less, where access to a shared driveway is limited, shall be subject to SCDOT approval and shall adhere to SCDOT standards;

4. Corner parcels located at an intersection of the corridor and an existing or proposed secondary street, including both public and private streets, shall obtain access from the secondary street. Where such parcels have 300 or more feet of corridor frontage, a point of access to the corridor may be considered if no other corridor access is located within 300 feet, and it adheres to SCDOT standards. Such additional access shall be considered on a case-by-case basis, and is subject to approval by the Administrator or SCDOT when applicable;

5. Existing median crossovers are to remain as located. Where justified by a Traffic Impact Analysis, access to a parcel may be required to align directly with an existing median crossover. Likewise, a Traffic Impact Analysis may require improvement to an existing crossover to meet current SCDOT standards. When a proposed access does not align directly with an existing median crossover, such access must adhere to the latest edition of the SCDOT ARMS Manual.

B. Connectivity: Reduction of access points along arterials and collectors are required and are identified in Section 6.5.2.A. The following shall apply:

1. Consolidation of Access Points:

a. Shared driveways between two or more parcels shall be required where there is not a conflict in use and a shared driveway is not restricted by topography or other existing site features. Shared driveways shall require mutually executed shared access agreements; and

b. Unless restricted by topography or other natural site features, adjoining parking lots serving non-residential buildings of non-conflicting use shall be connected and shall require mutually executed shared access agreements.

2. Stub Outs:

a. One stubbed out street shall be required to be provided to any adjacent undeveloped parcel or parcel used for a single-family home that contains a minimum of 5 acres as

set forth in Chapter 6 of the UDO. However, the Planning Commission may alter this requirement if the developer demonstrates that the connection would be difficult to provide because of topographical reasons; and

b. Where an undeveloped adjacent parcel exists, a stub out or cross-access easement for future stub out, shall be required to allow for connection to future parking and/or shared driveways; and

c. Where a developed adjacent parcel exists, existing stub outs shall be utilized.

6.9 IMPROVEMENT GUARANTEES

6.9.1 GENERAL

A. Before recordation of a final plat of a subdivision, the Administrator must be satisfied that all improvements required by this ordinance have been constructed.

B. In lieu of the completion of the improvements required by this section, the County may enter into a financial guarantee agreement with the developer whereby the developer shall agree to complete all required improvements except water and sewer.

C. The financial guarantee or surety will be subject to the following conditions:

1. The guarantee shall be in an amount equal to 125 percent of the cost of construction of the outstanding improvements based on an estimate by the Administrator.

2. The improvements will be completed within 12 months after approval of the financial guarantee and upon receipt of the corresponding security documents. The guarantee shall include with an automatic renewal, unless Lancaster County is notified in writing not less than 60 days prior to expiration that it will not renew. The financial guarantee may be amended by the Administrator, as required.

6.9.2 GUARANTEES

A. **Types of Guarantees:** To secure this agreement, the developer shall provide, subject to the approval of the Administrator, either one or a combination of the following guarantees:

1. The deposit of a certified check,

2. A letter of credit duly executed by a U. S. bank payable to Lancaster County wherein the letter of credit contains the following, or similar, language: Drawings may also be presented to us by facsimile transmission to facsimile number xxx-xxx-xxxx (each such drawing, a "fax drawing"); provided, however, that a fax drawing will not be effectively presented until you confirm by telephone our receipt of such fax drawing by calling xxx-xxx-xxxx. If you present a fax drawing under this letter of credit, you do not need to present the original of any drawing documents. Such letters of credit must include the development or subdivision name and phase. (Ord. No. 2017-1438, 5.8.17)

3. Another form of surety, together with an assignment of such security payable to Lancaster County, as approved by the Finance Director.

B. **Default by Developer:** In the event such improvements are not completed as required by the ordinance, the County shall proceed with the work and hold the owner and the guarantor jointly responsible for the costs thereof by redeeming such portion of the financial guarantee as may be necessary to complete the required improvements.

C. **Release of Financial Guarantee:** Upon completion of the improvements, the County shall release any assignment placed upon such account, certificate or other surety.

6.9.3 WARRANTY AGAINST DEFECTS

The developer shall be responsible for the maintenance and repair of all new streets, stormwater structures controls and other required utilities and warranty such improvements for a minimum of 2 years from the approval date of the final plat.

A. **Significant Failures Reset Warranty Period:** If a significant failure of the warranted improvements occurs, including pavement, trench, or subgrade failure of streets, at any time during the warranty period, the Administrator shall suspend the warranty until the failure is repaired to an acceptable condition. Upon completion of the repair, a new warranty period shall commence on the entire project.

B. **Warranty Inspection:** At least 30 days prior to the expiration of the warranty period, the developer shall request a warranty inspection. Upon successful completion of all warranty items, the developer shall be released from maintenance responsibilities for the warranted construction.

6.10 EASEMENTS AND DEDICATIONS

6.10.1 REQUIRED EASEMENTS

A. **Easement Width:** Easements shall be conveyed to the County or other appropriate agency for underground and overhead utility installation, stormwater drainage, pedestrian/bicycle access, and other purposes as required by the County. Easements shall be centered along front, rear, or side lot lines. The minimum width for easements shall be determined by the Administrator. Widths will vary based on the number of utilities placed within an easement area, the depth of utilities, and other related factors in order to ensure enough space for their future maintenance. The Administrator will set easement widths based on topography, on-site soils, number of utilities, etc., and in accordance with Appendix C, MSSD.

B. **Surface Drainage Easements:** Easements for watercourses and drainage channels shall conform to the lines of such watercourse, and such further width or construction, or both, as will be adequate for the purpose.

C. **Utility Cuts:** An encroachment permit will be required for any entity wishing to excavate or place utilities in the County right-of-way. Pavement cuts in streets made shall be repaired in accordance with Appendix C, MSSD.

6.10.2 RESERVATION/DEDICATION OF PUBLIC SITES AND FACILITIES

Property owners' association covenants shall include the following infrastructure improvements and common area not dedicated to the County:

A. **Infrastructure Improvements Not Dedicated to the County:** Property owners' association covenants shall be established and recorded that guarantee the association's responsibility for the ongoing liability, taxes, and maintenance of private streets, sidewalks, planting strips, storm drainage system, lighting, etc. constructed to serve the common development which are not dedicated to the County.

B. **Common Areas Not Dedicated to the County:** Property owners' association covenants shall be established and recorded that guarantee the association's responsibility for the ongoing liability, taxes, and maintenance of recreational facilities and common open space, which are not dedicated to the County.

6.11 STREET NAMES AND HOUSE NUMBERS

6.11.1 SYSTEM ESTABLISHED

There is hereby established an official system of road names in the County as shown on a map entitled "Lancaster County Official Streets and Highways Map," a copy of which is on file and available for reference at the Lancaster County Public Safety Communications Department and made a part hereof by reference. Names of roads shall remain as shown on said map unless officially changed as herein provided. The E-911 Database Coordinator shall maintain an up to date index listing the names of all known roads.

6.11.2 CONDITIONS OF ACCEPTANCE

No new road shall be platted by the County until such road has been named as herein provided.

A. A master list of the names, including suffixes of all roads and streets, within Lancaster County shall be maintained by the E-911 Coordinator and kept on file in the Planning Department.

B. Road names on all plats must be first approved by the Planning Department/E-911 coordinator before the plat may be recorded in the Register of Deeds office.

6.11.3 ROAD NAME STANDARDS

A. The following shall specify the designation of road names. The road related definitions listed below shall apply to the development of street names, house or building numbers, and other addressing purposes. (Ord. No. 2019-1601, 9.23.19)

1. Any road in excess of 1,000 feet in length shall be designated as:

a. Avenue (Ave): Avenues are often broad streets or roads; usually running perpendicular to streets. They serve as connectors between neighborhoods and area centers. As such, they are used both in residential and commercial areas. Avenues may also circulate around squares or neighborhood parks.

b. Boulevard (Blvd): A broad, often landscaped, thoroughfare; usually a main artery. A median is usually in the middle. They provide multi-lane access to commercial and mixed-use developments and carry regional traffic throughout the County.

c. Circle (Cir): A curving side street; usually a small residential street whose shape is circular.

d. Drive (Dr): A long, winding road that has its route shaped by its environment, like a nearby lake or mountain.

e. Highway (Hwy): A public way; a main direct road that joins cities or towns together.

f. Road (Rd): A thoroughfare that runs in any direction.

g. Street (St): A thoroughfare, especially in a city, town, or village, which is wider than an alley or lane and usually includes sidewalks. Usually runs perpendicular to avenues.

2. Any road less than 1,000 feet in length or any road that is cul-de-sac or any road that begins and ends on the same road shall be designated as:

a. Alley (Aly): A narrow street; a thoroughfare through the middle of a block giving access to the rear of lots or buildings which are intended to provide

indirect, limited access, but not accommodate through traffic. Utilities, either above ground or underground, and services such as garages, service doors, dumpsters, etc. may be located in alleyways to provide service connections to rear elevations.

b. Court (Ct): A wide alley with only one opening onto a street; a road or street that ends in a circle or loop usually referred to as a cul-de-sac.

c. Lane (Ln): Lanes are small traveled ways intended to provide direct access to the front of a limited number of single-family structures. Lanes are limited in the number of lots served. Generally, they are very short; often less than 400 feet. Items including, but not limited to, traffic carrying capacity, topography, and connectivity, shall be a consideration when permitting a lane in lieu of a street.

d. Place (Pl): A small street or court; usually a small residential street or a narrow street in a commercial district.

e. Terrace (Ter): A type of shorter, narrower road that follows the top of a slope.

f. Trail (Trl): A winding thoroughfare.

g. Way (Wy): A small side street off of a road.

B. Any previously unnamed road or new road with center line offsets at intersections of less than 100 feet shall be given the same name, except in a subdivision. The roads will be allowed 2 separate road names under the discretion of the approval of the Lancaster County Addressing Coordinator. Excluding roads within an approved subdivision or PDD.

C. Any continuous road shall have the same name over its entire length even though its direction may change.

D. No road name hereafter established, regardless of suffixes or directionals, shall duplicate either phonetically or by spelling, another road name in the unincorporated area of Lancaster County or a neighboring county. This is to ensure emergency personnel are directed to the proper location in the correct jurisdiction.

E. No road name hereafter established shall exceed 15 characters, including spaces and suffix abbreviations. If the subdivision provides their own signage, the character limit does not apply.

F. No special characters, such as hyphens, apostrophes, periods, or decimals, shall be used.

G. Areas of surrounding counties, which share Postal Service zip codes or multi-jurisdictional emergency services agreements with areas of Lancaster County, shall be considered when determining duplicates.

H. The E-911 addressing department will not allow use of words which in its opinion are overused, either in the immediate area or county-wide, as such overuse is likely to cause confusion.

I. Directional names (N, S, E, W or combination thereof) shall not be allowed.

J. Proposed road names, which are intentionally misspelled, obscene, derogatory or other offensive words shall not be permitted.

6.11.4 PROCEDURE FOR NAMING A NEW ROAD

A. Any person, firm, corporation, developer or right-of-way owner shall submit an application obtained from the Planning Department when requesting to name a new road. Such request shall include any descriptive/locational information required by the Planning Department; designate a spokesperson by name, address, and telephone number; provide first and second road name choices; and be accompanied by a petition, signed by 75 percent of the property owners with parcels having frontage on the affected road.

B. If the request is consistent with standards included the section entitled "Road Name Standards," above, the Planning Department shall approve said request giving written notice of that action within 60 days of the date of such request.

C. If the request is denied by the Planning Department, written notice including reasons for that action shall be provided within 60 days of the date of such request.

D. Decisions of the Planning Department, whether affirmative or negative, shall be final subject to written appeal to Lancaster County Planning Commission filed with the clerk to the commission within 15 calendar days of the notice date of the Planning Department's decision. Such appeal shall set out the specific grounds upon which the Planning Department's decision is questioned. The fifteen-day appeal period shall commence on the date of the Planning Department's written notice of decision, which shall be sent to the person signing the affected road name request.

E. A person laying out a street is guilty of a misdemeanor if he shows an unapproved street name on a plat, street marker or deed. If convicted, the court decides the punishment.

F. Naming a previously unnamed road or driveway does not change the maintenance responsibility; if it was privately maintained prior to its naming, it will remain privately maintained.

G. Any road or driveway, whether publicly or privately maintained that serves as the sole access for three (3) or more permanent residential or business structures must be named. (Ord. No. 2017-1485, 1.8.18)

6.11.5 PROCEDURE FOR CHANGING THE NAME OF AN EXISTING ROAD

A. Any person, firm, or corporation shall submit a written request to the Planning Department which proposes to change the name of a previously named road. Such request shall include any descriptive/locational information required by the Planning Department; designate a spokesperson by name, address, and telephone number; provide first and second road name choices; and be accompanied by a petition, signed by 75 percent of the owners addressed on the affected road. The request must also include a reason for the name change. When the request is submitted by the Public Safety Communications Department, or its successor entity, for a road name change based on the provisions of Section 23-47-60(C)(2) of the Code of Laws of South Carolina 1976, as amended, or when needed to rename road segments for computer aided dispatch database purposes, the requirement for the request to be accompanied by a petition does not apply.

B. Upon receipt of such request, the Planning Department shall schedule consideration of same by the Lancaster County Planning Commission. The Planning Commission's consideration shall be conducted during any regular meeting of the Planning Commission. The public notice requirement for this type of application shall be the same as is contained in Chapter 9.

C. The proposed road name change shall be posted at integral points along the affected road.

D. Within 60 days of first consideration, the Lancaster County Planning Commission shall render a decision on the request, which decision shall be final and binding. Such decisions of the Planning Commission, along with reason(s) for any denied request, shall be provided in writing to the spokesperson of the affected petitioning group.

E. Where road name signs have been installed and replacement is necessitated as a result of a road name change approval, the petitioning group involved shall pay the expense of new sign materials prior to installation in the form of an application fee collected by the Planning Department.

F. After reasonable notice in a general circulation newspaper in the community, the Lancaster County Planning Commission may change the name of an existing street or road within its jurisdiction. The commission can make the change when one of the following occurs.

1. There is a duplication of names which tends to confuse the public or persons delivering mail, orders or messages.
2. A change may simplify markings or giving directions to persons looking for an address.
3. Any other good and just reason that may appear to the commission.

After reasonable opportunity for public hearing, the Planning Commission issues its certificate designating the change. It is recorded in the Lancaster County Register of Deeds office. The change and certified name becomes the legal name of the street.

6.11.6 NOTICE TO AFFECTED ENTITIES

Upon approval of any road name, the Administrator shall notify affected entities which shall include at least the County Tax Assessor, Public Works Director, Fire Marshal, Sheriff, Emergency Management Planner, and other agencies.

6.11.7 PENALTIES

A. It shall be unlawful for any person to establish or name any street or road by any marking on any sign, plat, deed or other instrument without first obtaining the approval of the Planning Department, or Lancaster County Planning Commission, as appropriate. Any person, firm, or corporation violating this provision shall be guilty of a misdemeanor and, upon conviction, shall be punished by a fine not greater than $200.00 and/or imprisonment of 30 days.

B. It shall be unlawful for any person to remove or deface street signs or tamper with the direction of signs. Any person violating this provision shall be guilty of a misdemeanor and, upon conviction shall be punished by a fine not greater than $200.00 and/or imprisonment of 30 days.

C. Failure by the owner, occupant or agent responsible for a building to place or cause to be placed on each building proper numbers as provided by this ordinance shall constitute a violation of this ordinance, and the owner, occupant or agent shall be deemed guilty and subject to a fine not to exceed $500.00 per day, issued by the Administrator.

6.11.8 NAMING STATE SECONDARY ROADS

All roads in the County contained in the secondary portion of the state highway system shall be named in accordance with appropriate provisions of this chapter.

6.12 UNIFORM ADDRESSING AND NUMBERING

6.12.1 UNIFORM NUMBERING SYSTEM

A uniform system of numbering properties and principal buildings, as shown on the map identified by the title, "Uniform Numbering System Map, County of Lancaster, S.C." (hereinafter referred to as "property number map"), which is filed with the E-911 database coordinator in the Public Safety Communications Department, is hereby adopted for use in the County. This map and all explanatory matter thereon, is hereby adopted and made a part of this ordinance.

6.12.2 ASSIGNMENT OF NUMBERS

A. All properties or structures within the County shall hereafter be identified by references to the uniform numbering system adopted herein; provided further, that all existing street numbers assigned to a parcel and/or not in conformity with the provisions of this section shall be changed to confirm to the system herein adopted.

B. A modified grid system is utilized for addressing the County. The reference streets for numbering are:

1. The north/south axis is U.S. Highway 521;

2. The east/west axis is S.C. Highway 9;

3. All buildings north of east/west streets and east of north/south streets shall bear even numbers and all buildings on the south side of east/west streets and west of north/south streets shall bear odd numbers. All streets running more nearly north/south shall be numbered as north/south streets, and all streets running more nearly east/west shall be numbered as east/west streets.

C. All numbers shall be assigned by the Administrator on the basis of two numbers for every five feet of frontage along the street. (Ord. No. 2019-1601, 9.23.19)

D. No single building shall be assigned more than 1 number.

E. Notwithstanding any other provisions of this article, when multiple buildings have frontage within one or more assigned 25 foot frontage areas and under the remaining provisions of this article, each such building would be assigned a separate number designation.

F. All new streets shall be numbered with odd numbers on the left side of the road and even numbers on the right side of the road, leaving at least two numbers for every 25 feet of road frontage.

G. The Administrator shall notify the applicant of the following information as a complete proper address within 60 days of the date of the E-911 addressing application:

1. A house or structure number.

2. A correct street name.

3. The proper E-911 community name and the postal community name if different from the E-911 community name.

4. The proper zip code.

H. Each structure shall have its own distinct address.

1. Each single, detached structure shall have its own individual number.

2. Collective developments (such as mobile home parks and apartments) containing only one street or located along only one street shall be assigned either: 1 central number with a unit number or apartment number or each building may be assigned its own individual number along that street.

3. Collective developments containing more than one street or built along more than one street may have an individual number assigned to each structure. The road name shall be the one that provides access to the building. Each street in the development shall be assigned a name consistent with this chapter.

4. Units in strip shopping centers, units in duplexes, and like developments shall be assigned a central number along with suite numbers or individual numbers along the street which provides them vehicular access. The outbuilding of strip shopping centers shall be considered single, detached structures and given an individual number.

I. A 911 Address Permit must be completed for single point addresses or projects that are not reviewed by the Technical Review Committee. The following documentation must be obtained and available to the 911 addressing coordinator before a 911 address can be issued. (Ord. No. 2019-1601, 9.23.19)

1. Recorded plat and deed
2. Zoning application
3. Zoning permit
4. Septic tank permit
5. 911 addressing permit

J. Submitted plans that have been through the Technical Review Committee may be addressed upon approval, no 911 Address Permit is needed. The following items must be received in Addressing (Ord. No. 2019-1601, 9.23.19):

1. Approved plat or plans
2. Approval letter from Lancaster County Planning
3. CAD file, in State Plane, from Developer or Contractor

6.12.3 LOCATION OF NUMBER

A. When each house or building has been assigned its respective number or numbers, the owner, occupant, or agent shall place or cause to be placed upon each house or building controlled by him the number or numbers assigned under the uniform system as provided in this chapter.

B. Such numbers shall be placed on existing buildings on or before the effective date of this article, and within 30 days after the assigning of the proper number in the case of numbers assigned after the effective date of this article. The cost of the numbers shall be paid for by the property owner. Residential numbers shall not be less than 3 inches in height, and business numbers shall not be less than 4 inches in height. These numbers shall be made of durable and clearly visible material and shall be in a contrasting color from the building.

C. The numbers shall be conspicuously placed immediately above, on, or at the side of the proper door of each building so that the number is clearly legible from the nearest public travel way. Should the structure be too far from the public travel way for reasonably sized numerals to be seen, the property owner shall also erect where the main driveway to the building intersects the public travel way an additional set of numerals which are to be legible from vehicles traveling at the speed limit on the roadway.

6.12.4 ADMINISTRATION

A. For the purpose of facilitating correct numbering, grid maps of all streets, avenues, and public ways within the County showing the proper address ranges shall be kept on file and available for public review.

B. It shall be the duty of the Administrator to inform any party applying therefore of the number or numbers belonging to or embraced within the limits or any said lot or property as provided in the section. In case of conflict as to the proper number to be assigned to any building, the Administrator shall determine the number of such building.

C. Whenever any house, building, or structure shall be erected or located in the County after the establishment of the uniform system of numbering provided for herein has been completed, in order to preserve the continuity and uniformity of numbers of the houses, buildings, and structures, it shall be the duty of the owner to procure the correct number or numbers as designated by the building and zoning department for the property and to immediately fasten the number or numbers so assigned upon the building as provided by this article. No building permit shall be issued for any house, building or structure until the owner has procured the official number of the premises.

D. Whenever any house, building, or structure shall be erected or located in the County after the establishment of the uniform system of numbering provided for herein has been completed, in order to preserve the continuity and uniformity of street numbers for houses, buildings, and structures, it shall be the duty of the owner to procure the correct number or numbers as designated by the Administrator for the property and to immediately fasten the number or numbers so assigned upon the building as provided by this chapter. No Certificate of Occupancy shall be provided by the Administrator for any house, building or structure until the owner has complied with Section 6.12.13.B of this ordinance.

E. Whenever any house, building, or structure shall be erected or located in the unincorporated section of the County, it shall be the duty of the Administrator to assign its proper street number based on the uniform numbering system set forth in this chapter. The Lancaster County Planning Department shall also number all subdivision plats prior to their being recorded in the register of deeds and shall number all commercial/industrial development and manufactured home park plats and site plans at the time such plats and plans are permitted by the County. It shall be the duty of the building and zoning department to inform any party applying for a permit that they must obtain a proper address from the Administrator prior to receiving a Certificate of Occupancy.

F. Existing numbers shall be changed only where it is necessary in the judgment of the Administrator to maintain the order and uniformity sought by this ordinance.

6.13 ROADS, BRIDGES, AND PUBLIC WAYS

6.13.1 ACCEPTANCE OF ROADS

A. Post Ordinance No. 2008-915 Roads are considered to be those roads that were "identified and created through the submission of a preliminary plat" following the passage of Lancaster County Ordinance No. 2008-915 on December 1, 2008, but prior to January 1, 2015. To be accepted by the County, the following shall be mandatory:

1. Each requirement and condition set forth in Ordinance No. 2008-915 must be accomplished;

2. Each requirement shall be completed by the owner on or before December 31, 2017.

B. Roads within a planned development district/mixed-use districts, a residential subdivision, or other developments that are identified and created through the submission of a preliminary plat after January 1, 2015, will be private. Subject only to the specific exception noted below, the approval process for these roads shall have the following two requirements:

1. The platted roadway must indicate with specificity on the plat to be recorded that the road will remain privately owned and privately maintained.

2. The owner of the roadway must provide to Lancaster County sufficient proof that there is in existence a legally created property owners association or other similar entity for the purpose of providing perpetual maintenance and repairs for the road.

3. As an exception to the requirements set forth in Sections B.1 and B.2. Upon proof that the road in question has been built in full compliance with Ordinance No. 2008-915, Council may vote to accept the road into the County system upon a finding that the road provides connectivity to the County road system or is a necessary component for the proper development of the County road system.

a. Council's favorable consideration shall be by an affirmative resolution vote of at least ⅔ of the Council members.

b. The resolution must contain language establishes a finding that the road fully meets the two conditions cited in Section B.1 and B2 above.

c. Under no circumstances shall the County accept ownership or responsibility for sidewalks, landscaped medians, stormwater infrastructure outside the road right-of-way, detention ponds, street trees, decorative stamped asphalt or concrete, pavers, street lights and similar items.

C. Before any road or right-of-way is accepted by Lancaster County for ownership, maintenance or use, the owner shall provide the Administrator a copy of a recorded certified plat of the road which must specifically show the distance, width and location of the road. The owner wishing to transfer a road or right-of-way shall prepare a deed and deliver the deed to the Administrator along with the recorded plat and the opinion of the owner's legal counsel that the grantor of the right-of-way has marketable fee simple title. Before any road is accepted, all owners of the road must have executed the deed. The deed must not be recorded before the road or right-of-way has been accepted by the County. If the road or right-of-way is accepted, the Administrator shall provide the owner a certificate of acceptance which must be recorded with the deed.

6.13.2 INSPECTION

The roadway developer shall provide the County a set of "as-built" drawings for the roadway and the drawings must show all details related to the roadway, including, but not limited to, centerline profile, dry utilities, water system, sewer system and storm drainage system. The Administrator shall inspect, or cause to be inspected by an engineer retained by the County. The roadway owner must pay a road inspection fee to cover the cost of the inspection. The road inspection fee shall be set annually in the County budget.

6.13.3 WARRANTY

A. Before final plat approval by Lancaster County, the developer shall provide a warranty to cover defects in workmanship and materials of the road and supporting systems within the right-of-way. The warranty must be secured by the developer providing an acceptable letter of credit to the County Finance Director. In lieu of a letter of credit, the developer may deposit cash with the County Finance Director. The dollar amount of the letter of credit or cash deposit must be not less than 50 percent of the cost of the final one and one-half-inch asphalt overlay. The warranty period begins with the date of approval of the final plat and runs for two years.

B. If a road or right-of-way is platted prior to the installation of the final 1.5 inch asphalt overlay, then the developer shall provide an acceptable letter of credit to the County Finance Director to insure installation of the final asphalt overlay. In lieu of a letter of credit, the developer may deposit cash with the County Finance Director. The dollar amount of the letter of credit or cash deposit must be not less than 125 percent of the engineer's estimated cost of installation of the final asphalt overlay as approved by the Public Works Director.

6.13.4 VARIANCES

County Council may waive provisions of this article upon a written finding that compliance with such provisions would result in undue hardship for the owner/developer or owners fronting upon a proposed road for acceptance. Requests for variances shall be submitted in writing by the owner/developer in advance of or simultaneously with a request for final plat approval. Such requests shall identify the provision or provisions for which a waiver is requested and shall substantiate the reasons that expenditures necessary to meet such provisions are not reasonably recoverable. Any variance granted shall be the minimum necessary to avoid unreasonable prejudice. To the extent that expenditures are recoverable on a reasonable basis, such as through the sale of lots fronting a road proposed for acceptance, prejudice shall not be found to exist.

6.13.5 PRIORITY FOR MAINTENANCE

Maintenance shall be performed on all county roads based on the following factors:

- The utilizations of the road by county residents;
- The availability of funds;
- The availability of other access roads.

School bus routes and heavily traveled roads will have priority as to maintenance.

6.13.6 ABANDONED OR PRIVATE ROADS NOT MAINTAINED

The County shall not maintain any road if the road is abandoned nor shall the County maintain any private road.

6.13.7 RESTRICTIONS UPON USE

The County Council shall have the authority to restrict the use of any road maintained or deeded to Lancaster County as follows when such action is indicated based upon a traffic and engineering study:

- Restrict the use of a County maintained road to cars only;
- Restrict the use of a County maintained road to certain weight limits;
- Restrict the use of a County maintained road to those persons living on the road or traveling to a residence on the road by designating the road a non-throughway, through road, or thoroughfare;
- Restrict the speed limit on County maintained roads, if necessary;
- If the County maintained road is unsafe or abandoned, close the road;
- Restrict the use of any bridge maintained by the County to certain weight limits, and to terminate the use of any bridge that is unsafe.

The County Council shall not restrict the use of any road as to vehicles by this article without posting an appropriate sign or signs to properly notify persons of the restrictions.

6.13.8 UTILITY LINES OR PIPES

No utility lines or pipes shall be installed in or across any County road bed without a County encroachment permit.

6.14 ROAD CONSTRUCTION STANDARDS

6.14.1 ROAD DESIGN (GEOMETRIC CRITERIA)

In general, geometric criteria for road design shall be in accordance with standards of the South Carolina Department of Transportation (SCDOT). Said standards are those contained in the latest edition of "A Policy on Geometric Design of Highways and Streets" by the American Association of State Highway and Transportation Officials. Local and collector residential roads that will be maintained by the County shall be designed in accordance with the following standards.

A. Minimum right-of-way and pavement width shall be as follows:

Road Type	Right-of-Way (feet)	Pavement (feet)
Local (Urban)	50	22
Local (Rural)	60	22
Collector (Urban)	60	24
Collector (Rural)	66	24
Commercial/Arterial (Urban)	60	26
Commercial/Arterial (Rural)	66	26

Additional right-of-way or pavement width will be provided as determined necessary by County Council for high density residential or nonresidential subdivisions or portions thereof.

B. Cul-de-sacs shall not exceed 500 feet in length, except where unusual topographic or other physical conditions dictate otherwise, and shall have a turnaround with 90 feet minimum diameter to pavement edge and 100 feet minimum diameter to right-of-way line. Dead end streets without turnarounds are prohibited. In no case shall a cul-de-sac serve more than 20 residential lots.

C. Design speed, sight distance, and centerline radius shall be as follows:

	Local	Collector	Commercial/Arterial
Design speed	25 mph	25	35 mph
Minimum sight distance on vertical curve	150 feet	200	225 feet
Minimum centerline radius	150 feet	200	250 feet

1. Horizontal curvature shall be introduced at any change in road direction. Major road curvature shall be in accordance with SCDOT standards. Minimum tangent between reverse curves shall be 100 feet for local roads, 200 feet for collector roads, and 60 feet from curve to any intersecting road.

2. If a collector road may reasonably be expected to serve more than 1 subdivision, it shall be designed for at least a 55 miles per hour design speed (450 minimum sight distances). Minimum sight distance at intersections shall be established by provision of a clear sight triangle measured along centerlines for 100 feet, which triangle shall be entered upon the final plat prior to recording.

D. Site distance at intersections shall be as follows:

# of Lanes	Minimum Sight Distance (BC) (in feet)							
	20mph	25mph	30mph	35mph	40mph	45mph	50mph	55mph
2	200	250	300	350	400	450	500	550
3	220	275	330	385	440	495	550	605
4	240	300	360	420	480	540	600	660
5	250	312.5	375	437.5	500	562.5	625	687.5
6	260	325	390	455	520	585	650	715

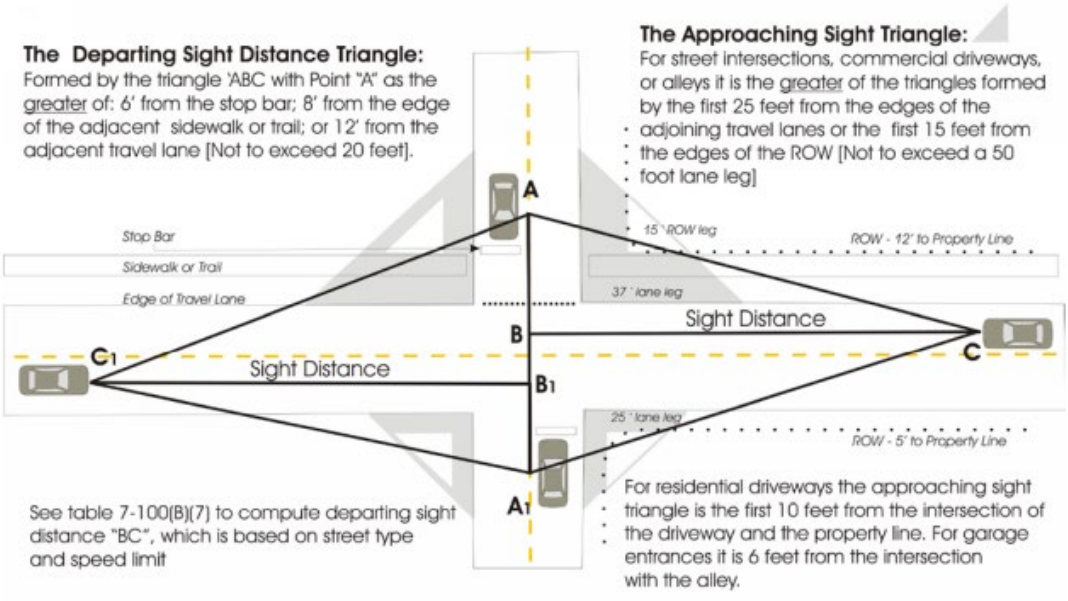

NOTE: All sight triangles prohibit objects or plants from obscuring visibility of objects between 3 ½ and 8 feet in height [accounting for vertical or horizontal curves]. The departing sight distance triangle will apply to alleys, driveways and garage entrances - except that (where no ROW for additional lanes or tree planting strip is available) point 'A' may be six (6)' from the edge of the adjacent sidewalk, trail or travel lane whichever is greater.

E. Roads shall be designed to intersect as nearly as possible at right angles, but no less than 75 degrees. Minimum radius or curb or pavement edge at intersections shall be at least 20 feet at intersections with local roads and 25 feet at intersections with collector roads.

F. Unless necessitated by unusual topographic conditions approved by County Council, minimum and maximum road grade shall be 1 percent and 8 percent, respectively. Road crown shall be 2 percent.

G. Proposed intersections on one side of a road shall coincide with existing or proposed intersections on the opposite side. Minimum centerline offset for intersections on opposite sides of a road shall be 150 feet. No two roads may intersect on the same side of a road at a centerline separation distance of less than 400 feet.

H. At street intersections, the intersection of paved surfaces shall be rounded with a minimum radius of 30 feet. Where streets intersect at less than right angles, a greater radius may be required.

I. **Two Street Maximum:** The intersection of more than two streets at one point shall be avoided except where it is otherwise impracticable to secure a proper street system as determined by the Administrator.

J. **Sight Triangles:** A 25-foot by 25-foot sight visibility triangle shall be maintained at all street intersections. Within the sight visibility area no fence, wall, sign (except regulatory and street name signs), slope, embankment, parked vehicle, hedge, foliage, or other planting or structure shall be placed, erected or maintained which will obstruct visibility within the sight area. This sight triangle requirement may be reduced by the Administrator at fully controlled intersections only.

6.14.2 PAVEMENT STANDARDS

In general, all roads shall be constructed in accordance with the South Carolina Department of Transportation's "Standard Specifications for Highway Construction" (latest edition) as it relates to earthwork, bases/subbases, paved surfaces, etc., and the following requirements.

A. **Grading for Road Construction:**

Street shall be graded in accordance with the lines and grade set by the engineer. Before placing curb and gutter or base on the graded subgrade, the subgrade shall be compacted to one 100 percent ASTMD690 for a depth of 6 inches and then shall be proof rolled in the presence of the engineer. Places that are found to be loose, or soft, or composed of unsuitable materials, whether in the subgrade or below it, must be dug out and refilled with suitable material. All embankments or fills shall be made in one-foot horizontal lifts of suitable material. The fill shall be rolled with a sheepsfoot roller after each lift, followed by a wheel roller, each weighing not less than 8 tons.

B. **Paved Road Surfaces are Required for all Roads:**

The developer shall submit a complete soils report and a detailed road thickness design as part of his or her engineering plans and specifications that either supports the County's minimum requirements or recommends thicker sections based on actual soil conditions. A complete soils report and detailed road design shall convincingly support the use of the County's typical minimum cross-section or document the necessary variations from the required design criteria. This report and design shall be prepared by an independent County-approved Geotechnical Engineer/Testing Laboratory and approved by the Administrator. NOTE: A complete soils report includes, but is not limited to, the following data: a CBR for every soil type and a grain size analysis and Atterberg Limit determination for each soil type.

C. **Road Construction between March 1 and November 30:**

1. **Local Roads:** Road base shall include 8 inches of crushed stone with a 1.5 intermediate asphalt course and a 1.5 inches compacted asphalt surface course. Alternate designs will be acceptable if they have the same or greater coefficient of strength and with prior written approval from the Public Works Director. Road shall be left down 1.5 inches for future

overlay 95 percent build out of entire project, even if phased. A local road shall mean a route providing service which is of relatively low average traffic volume, short average trip length or minimal through-traffic movements, and high land access for abutting property. Total cross section for local roads: 8 inches crushed stone compacted, 1.5 inch compacted intermediate asphalt course, 1.5 inches compacted asphalt surface course.

2. **Collector/Subcollector Roads:** Road base shall include 8 inches of compacted crushed stone with a 3 inches compacted intermediate asphalt course, and 2 inches compacted asphalt surface course . Alternate designs will be acceptable if they have the same or greater coefficient of strength and with prior written approval from the Public Works Director. Road shall be left down 2 inches for future asphalt overlay after 85 percent build out of entire project, even if phased, or 2 years from completion date, whichever comes first. A collector/subcollector road shall mean a route providing service which is of higher average traffic flow, serving as a main route for interior/exterior traffic and land/property access related to the designed project. Total cross section for collector/subcollector roads: 8 inches compacted crushed stone, 2 inches compacted intermediate asphalt course, 2 inches compacted asphalt surface course.

3. **Commercial/Arterial Roads:** Road base shall include 8 inches of crushed stone with a 4 inch asphalt intermediate course and 2 inch surface asphalt course. Alternate designs will be acceptable if they have the same or greater coefficient of strength and with prior written approval from the Public Works Director. If CBR and traffic study supports a cross section below the proposed standard, proposed standard will still be used. If road requires a heavier section, then the pavement design shall be included in plan review by the project engineer/geotechnical engineer. Lancaster County may also incorporate a mandatory lime/cement treated subgrade for such roads identified as commercial or arterial roads. A commercial/arterial road shall mean any road inside a business or industrial park and those roads providing service which is of relatively moderate average traffic volume, moderately average trip length, and moderately average operating speed. Such a route collects and distributes traffic between local roads or arterial roads and serves as a linkage between land access and mobility needs.

D. **Road Construction Between December 1 and February 28 (29):** Road work requires advance approval by Lancaster County:

1. **Local Roads, Collector/Subcollector Roads:** Road base shall be treated with lime or cement base stabilization and shall include 4 inches compacted intermediate asphalt course. Road shall be left down 2 inches for future overlay after 85 percent build out of entire project, even if phased, or 2 years from completion date, whichever comes first.

2. **Commercial/Arterial Roads:** Road base shall be treated with lime or cement base stabilization and shall include 6 inches of compacted intermediate course and 2 inches of compacted surface course. If CBR and traffic study supports a cross section below the proposed standard, proposed standard will still be used. If road requires a heavier section, then the pavement design shall be included in plan review by the project engineer / geotechnical engineer.

E. All entrances shall be paved with 10 inches full depth asphalt 50 feet (minimum) from edge of intersecting road ROW. An entrance is defined as wherever asphalt begins of an intersecting street, or end of a previous phase.

F. Any utility cuts in asphalt shall be saw cut, primed, and replaced with 8 inches minimum hot asphalt mix.

G. All conduit crossings shall extend from edge to edge of the right-of-way of the road, and must be installed before curb and gutter is to be poured. Developer is responsible for ensuring dry utilities (power, cable/phone, natural gas) are properly installed and compacted. Dry utilities are

subject to inspection by Lancaster County Public Works, and any deficiencies must be corrected immediately.

H. All curb must be, or transitioned to, SCDOT vertical standard curb at all creek crossings. A 10-foot transition is also required from curb to all drainage structures.

I. All roadway ditches and channels shall be designed to contain, at a minimum, a peak flow from a 25-year frequency storm. All roadway ditches and channels shall be designed so that the velocity of flow expected from a twenty-year frequency storm shall not exceed the permissible velocities for the type of lining used. Riprap shall be placed for stops in road drainage swales as needed. Swales shall be stabilized against erosion by grassing with a mixture of rye and Bermuda grass. Road swales shall be installed at a maximum depth of 3 feet and be designed to enable mowing by adjoining property owners.

J. Roads may be constructed with drainage swales and 6 foot wide shoulders (12:1 slope) provided road grade does not exceed 6 percent. Where road grade exceeds 6 percent, curb and gutter, paved drainage swales, or riprap swales shall be provided. Curb and gutter may be roll-type or standard 90 degree curb.

6.14.3 MATERIALS

Roadway materials shall conform to the latest edition of the SCDOT's "Standard Specifications for Highway Construction."

A. Base course for streets shall be crushed stone conforming to SCDOT Type ABC stone. The stone base course shall be placed in four-inch layers, watered as necessary, and compacted to 100 percent ASTMD690. The contractor shall be responsible for keeping the stone base free of contamination from clay or other foreign materials. Handling and placement of stone base shall all be in accordance with SCDOT specifications.

B. Asphalt intermediate course shall meet SCDOT specifications for Type C asphalt intermediate course.

C. The asphalt surface course shall meet SCDOT specifications for Type C asphalt surface course.

D. Concrete curb shall meet SCDOT specification and be a minimum of 18 inch rolled or barrier curb.

6.14.4 PROOF ROLLS

A. CURB & GUTTER

For all roads with curb and gutter, the following requirements apply:

1. Curb subgrade shall be proof rolled with a loaded dump truck. Proof roll equipment must be approved by Lancaster County Public Works. No weight ticket will be necessary for curb subgrade proof roll.

2. Curb subgrade proof rolls shall be scheduled between the hours of 8:30 a.m. and 2:30 p.m. (Monday through Thursday). Any curb subgrade proof roll scheduled on Friday or the day prior to a holiday must be approved by Lancaster County Public Works. A twenty-four hour notice is required.

3. Curb proof rolls shall be scheduled accordingly, despite size or phasing of project. Lancaster County will not "piece mill" proof rolls for curb placement.

4. Curb subgrade shall be smooth on top with no loose material, cracks, ruts, or organic material roots visible in subgrade. Exposed rock shall be at least 6 inches below subgrade.

5. The contractor or project engineer will schedule proof rolls.

6. All sewer and water lines shall be tested by the project engineer, and all road crossing conduits installed before curb subgrade proof roll.
7. Curb subgrade shall be compacted properly with no visible movement, and at optimum moisture content in order for proof roll to pass.
8. If proof roll fails, a re-inspection fee in an amount established by the Lancaster County annual budget shall be collected before the rescheduled proof roll.
9. Any undercut areas must be replaced with material approved by the Lancaster County Public Works Department.
10. All concrete shall meet or exceed SCDOT and all local government requirements. Concrete shall be 3,600 psi, or greater. Temperatures must be above 40 degrees Fahrenheit to pour curb. If temperatures fall below freezing (32 degrees F.) overnight, all finished curb shall be covered with insulation blankets.
11. Lancaster County reserves the right to have any material and/or utility trenches tested by an independent engineering firm, at the developer's/ contractor's expense.
12. Pour is to start within 24 hours of passed proof roll. If project receives significant rainfall, the proof roll shall be rescheduled. In the event of rainfall, any undermined curb and gutter shall be removed and repoured. Finished curb must have a minimum 72 hour period curing time, and be properly backfilled, before any stone is placed on the subgrade.
13. Lancaster County shall have final decision on the acceptance of all proof rolls.

B. ROADWAY SUBGRADE

For all roads, the following requirements apply:

1. Roadway subgrade shall be proof rolled with a loaded tandem dump truck with a minimum 15 tons loaded on truck, or a maximum of 54,000 pounds gross weight. Current weight ticket shall be provided to Lancaster County. Note: The use of water trucks, regardless of gross weight, is unacceptable.
2. Road subgrade proof rolls shall be conducted from the hours of 8:30 a.m. and 1:00 p.m. (Monday through Thursday). No road subgrade shall be proof rolled on Fridays or the day prior to a holiday.
3. The contractor or project engineer will schedule proof rolls. A representative of the paving contractor must be present at all subgrade proof rolls.
4. If a soils engineer is employed by the developer for quality control, the soils engineer shall be present at all proof rolls.
5. Subgrade proof rolls shall be scheduled accordingly, despite project size or phasing. Lancaster County will not "piece mill" proof rolls for stone placement. If subgrade is covered, contractor(s) shall make every effort to pave the road. Any stone left dormant over extended periods of time shall be considered contaminated, removed from the road base, and subgrade reworked.
6. Curb and gutter shall be properly backfilled and compacted before any roadway subgrade proof roll is scheduled. Backfill shall be inspected prior to any subgrade proof roll. Right-of-way shall be smooth and graded for positive drainage, with no ruts and all conduits/utility services properly tamped/compacted.
7. Roadway crown/grade shall be checked by the paving contractor, with a Lancaster County representative present, at 50-foot intervals minimum. If grade is inconsistent, the proof roll automatically fails and shall be rescheduled. A re-inspection fee in an amount established by the Lancaster County annual budget shall be collected before the rescheduled proof roll.

8. Proper erosion control measures shall be installed and maintained to prevent silt from contaminating roadway subgrade. Lancaster County reserves the right to have additional erosion control measures (ex. silt fencing, rip rap check dams, diversion ditches, etc.) installed to protect the roadway subgrade.

9. Roadway subgrade shall be smooth on top, with no visible cracks, ruts, or exposed organic material/roots present. Any exposed rock shall be at least 6 inches below subgrade, if conditions require rock to stay in place. Organics/roots shall be removed from the subgrade.

10. Roadway subgrade shall have no visible movement or deflection, and be at optimum moisture content, in order for proof roll to pass. Excessive "scaling" or movement in the top unbonded lift of soil shall be deemed failing, and unacceptable to Lancaster County.

11. Any undercut material must be approved by Lancaster County. Isolated marginal areas may use extra compacted crushed stone. Largely inconsistent areas must be reworked. Undercut areas shall be a minimum 12 inches in depth, and are subject to a reinspection fee.

12. Stone is to begin being placed within 24 hours following satisfactory proof roll.

13. Every effort shall be made to protect the subgrade/stone base. Construction traffic shall be monitored, and in certain cases, isolated failing areas may cause entire proof roll to fail. Upon completion of a satisfactory proof roll, construction traffic shall be limited to the forces of the paving contractor only. Utilities shall not be trenched in the road right-of-way of unpaved, undeveloped roads.

14. Stone shall not be placed on frozen or excessively wet subgrade. Temperatures must be above 35 degrees to place stone. In the event temperatures fall under freezing overnight, proof roll shall be rescheduled.

15. All material shall meet SCDOT standards, as well as local government standards. Lancaster County reserves the right to have any material tested by an independent engineering firm, at the developer's/ contractor's expense.

16. Lancaster County shall have final decision on all proof rolls.

C. ROADWAY STONE BASE

For all roads, the following requirements apply:

1. Stone base shall be proof rolled with a loaded tandem truck with 15 tons loaded on the truck, or a maximum gross weight of 54,000 pounds. Current weight ticket shall be checked.

2. Stone base shall be properly set and sealed, with no visible movement in order for proof roll to pass. No loose gravel, or segregation of stone on top, shall be permitted. Those areas shall be wet and rolled, or broomed/undercut until satisfactory surface is present. If proof roll fails, a re-inspection fee in an amount established by the Lancaster County annual budget shall be collected before the rescheduled proof roll.

3. Proof rolls shall be conducted from the hours of 8:30 a.m. and 1:00 p.m. (Monday through Thursday). Any proof roll scheduled on Friday or the day prior to a holiday must be approved by Lancaster County Public Works. A 24 hour notice is required.

4. Stone base proof roll shall be scheduled by the paving contractor only.

5. Pavement is to begin within 24 hours following satisfactory proof roll.

6. Every effort shall be made to pave the stone base. Traffic shall be monitored and routed around subgrade before, during, and after stone base is set or being set. In certain cases, isolated areas could cause entire proof roll to fail.

7. Any isolated areas shall be undercut and removed to the subgrade for full depth patching. Undercut areas will be a minimum of 6 inches.
8. Any areas of contaminated stone shall be undercut/removed before any asphalt is placed.
9. Pavement shall not be placed on frozen or excessively wet subgrade. Temperatures must be above 50 degrees by 10:00 a.m. to place asphalt. In the event temperatures fall under freezing overnight, proof roll shall be rescheduled. In the event of significant rainfall, proof roll shall be rescheduled.
10. All material shall meet SCDOT standards, as well as local government standards. Lancaster County reserves the right to have any material, fill, or trench tested by an independent engineering firm, at the developer's/ contractor's expense.
11. Proper measures shall be installed at catch basins to drain roadway properly after initial asphalt course is placed. These measures shall be the responsibility of the developer to maintain from the time of asphalt placement to the end of the warranty period.
12. Lancaster County shall have final decision on all proof rolls.

6.15 SIDEWALK STANDARDS

Sidewalk construction shall be similar to street construction, with subgrade compacted to 100 percent ASTMD690. Concrete sidewalks shall be four inches thick (increasing to 6 inches thick at driveway entrances), and shall be at least 5 feet wide. Expansion joints shall be provided every 300 feet; false joints at 10 feet. Where required, accessible ramps shall be constructed per SCDOT standard details.

6.16 UTILITY TRENCH COMPACTION

For all roads, the following requirements apply: Utility trenches within the road right of way shall be compacted to 98 percent maximum dry density per ASTM D698. The developer shall submit a report prepared by an independent County-approved Geotechnical Engineer/Testing Laboratory verifying compliance with this requirement. Density test shale be performed at a minimum rate of 1 per 200 feet of trench.

6.17 INSPECTIONS

6.17.1 STORM DRAIN INSPECTIONS

The following requirements apply to all storm drain systems:

A. Storm drain system must be initially inspected after catch basins are tied into curb and gutter (10 inch transition from curb to drainage structure). Storm drain system shall be cleaned and flushed before final acceptance inspection of roadway. A 48 hour notice is required. All drainage infrastructure must have a video inspection completed by the developer or requestor and submitted to the Public Works Director.

B. Catch basins must be free of excess silt and mud for inspection to pass. All throat/hood openings shall conform to the MSSD, and all pipe shall be reinforced concrete pipe (RCP). Any failures or deficiencies noticed in any pipe crossings flashed in roadway must be corrected before stone base is put down. Minor issues such as grouting boxes, changing grates, adding steps can be completed before final inspection.

C. All materials used in the storm drain system must be meet SCDOT specifications.

D. All outfall pipes must have a flared end with rip rap outlet protection properly installed.

E. Developer/contractor shall be required to have weepholes, pipes, or some form of temporary drainage, installed to the catch basins to protect the road subgrade/stone base/intermediate asphalt base course.

6.17.2 PAVEMENT INSPECTIONS

For all roads, the following requirements apply:

A. Pavement shall pose no drainage or safety hazard during its warranty period.

B. Upon installation of the intermediate asphalt course, Lancaster County Public Works will conduct monthly inspections of the roadway. Any immediate hazards will be forwarded in writing to the project engineer and/or developer. These repairs must be done immediately, or developer will be found in default, with the possibility of the suspension of building permits and Certificates of Occupancy for the project.

C. Pavement will be cored for Lancaster County Public Works at random intervals, determined by Lancaster County Public Works. Any failing areas must be made good immediately.

6.18 UTILITIES

6.18.1 FIRE PROTECTION FIRE HYDRANTS

All fire hydrants not located at an intersection, hammerhead, or cul-de-sac shall require that the road width be increased from 22 feet to 26 feet on the hydrant side of the road for a distance of 20 feet on either side of the fire hydrant.

A. SUBDIVISIONS

No structure shall be located more than 500 feet from a fire hydrant, all of which require a six-inch water main. The 500-foot length shall be measured as an apparatus would lay fire hose from the fire hydrant to the front of the structure. If the developer chooses to install fire sprinkler systems in <u>all</u> homes in the subdivision according or exceeding IRC P2904 or NFPA13D standards, the hydrant measurement may be increased to 1,000 feet from structures.

B. FIRE APPARATUS ACCESS ROADS

All fire apparatus access roads shall adhere to the requirements of the most recently adopted International Fire Code. All access roads are required to be 22 feet in width. Dead-end fire apparatus access roads in excess of 150 feet shall require either an 80-foot diameter cul-de-sac, a 120-foot hammerhead having two equal ends with lengths of 60 feet as measured from the centerline of the access road and widths of 22 feet and rounded corners with a radius of 28 feet or an alternative hammerhead turnaround extending from the access road a distance of 70 feet as measured from the far edge of the access road with a width of 22 feet and rounded corners with a radius of 28 feet.

C. ONE ACCESS SUBDIVISIONS

Development of any subdivision, or portion thereof, which will result in 100 or more dwelling units dependent on a single point of access shall require the provision of a second means of ingress/egress.

1. All one access subdivisions shall adhere to the following requirements:

a. Access into and out of the subdivision (i.e.) divided entrances, extra turn lanes, etc.

b. Provision of emergency services (i.e.) intermediate turnarounds at least every 1,000 feet up to the point where an intersection is located, divided entrances, extra lanes, special points of access, a minimum turning radius of 60 feet, etc.

c. Provision of safe and convenient traffic access and circulation. (i.e.) Avoid long straight roads (not over 2,000 feet) which can be used for speeding. Provide curves in the roads, etc. (Ord. No. 2017-1468, 9.25.17)

2. The suggestions made as to how to address these three areas of concern are not all inclusive and the applicant can make any other proposals which they believe will serve to alleviate any and/or all safety concerns.

3. Planning staff and the Planning Commission reserve the right to ask for a traffic impact statement for any subdivision regardless of the number of proposed units based on the amount of development which has in the surrounding area (within a one-half mile radius) if it appears that the proposed development could have a negative impact on the road system of the surrounding area. Staff or the commission may also ask for a traffic impact statement based on the direction of the trips (i.e.) a large amount of the anticipated trips will require a left-turn be made out of the subdivision.

D. EMERGENCY ACCESS TO GATED COMMUNITIES

The following notes are required on the final plat for gated communities:

1. Note on final plat stating the development is a gated community.

2. The developer will be required to install and maintain a "Click 2 Enter" system. This system is designed to use the emergency vehicles' radio equipment to activate a sensor at the entrance and open the gate. The controller would be purchased and maintained by the developer of the gated community.

3. The County will require the development to have a back-up Knox Key Switch system. This is a system that uses the Knox Key to override the gate controller. This system is used only if the "Click 2 Enter" system does not work.

E. ACCESS TO SUBDIVISIONS AND LOTS

1. Any subdivision created after June 30, 2008, and on or before December 13, 2012, which creates 10 or more lots shall be required to have its main point of access from within Lancaster County. This means the public or private road, which will be providing access to the newly created subdivision, shall be located within Lancaster County. Newly created subdivisions located within Lancaster County will no longer be able to have its main point of access from an adjoining county.

2. Any lot or any access to a building lot created after December 13, 2012, shall be required to have access that will accommodate emergency and school vehicles from within Lancaster County. This means the public or private road, which will be providing access, will accommodate emergency and school vehicles to the lot shall be located within Lancaster County.

F. NO PUBLIC WATER

Where no public water is available for fire protection, alternative means of providing fire protection will be required. These alternatives may include, but are not limited to:

1. Installing fire sprinkler protection per the applicable NFPA standard for the building protected.

2. Static water sources.

3. Water tanks.

4. Water pumps.

5. Cisterns.

The alternative means of fire protection will be evaluated by the Fire Marshal as a part of the Technical Review Committee process.

G. NO SPEED BUMPS

Traffic calming devices such as speed bumps, speed tables, speed cushions, or other devices which can cause damage to emergency apparatus are prohibited on any fire apparatus access road. A fire apparatus access road is defined as a road that provides fire apparatus access from a fire station to a facility, building, or portion thereof. This is a general term inclusive of all other terms such as fire lane, street, parking lot lane, and access roadway.

H. PRIVATE DRIVES

For private drives accessing more than two lots or more than two single-family residences, the road shall meet the private drive standards as follows:

1. No more than five lots may be assessed by a newly created private drive.
2. Each lot must have a minimum of 25 feet ingress/egress easement to be maintained by the property owner. The travel way must be at least 20 feet wide with gravel four inches deep. In addition, the first 25 feet of the drive must be 20 feet wide and paved when the private drive adjoins a paved road.
3. Vehicle turnarounds must be provided at the end of all dead end private drives or other alternative approved by the Fire Marshal.
4. The sub divider is responsible for obtaining a permit to access a state maintained road.
5. The unpaved private drive must be shown on a Final Plat and must meet all the criteria for a Final Plat.
6. Commercial private drive must comply with private road standards.

(Ord. No. 2017-1485, 1.8.18)

7 GENERAL DEVELOPMENT STANDARDS

7.1 LANDSCAPING AND SCREENING

The appropriate use of existing and supplemental landscaping provides aesthetic, environmental, and economic benefits and contributes to the overall quality of life in all communities. The purpose of this section is to:

- Enhance appearance and increase property values in Lancaster County.
- Provide visual buffers and transitions between dissimilar land uses and protect abutting properties from potential negative impacts of neighboring development and to preserve the character and value of a property and provide a sense of privacy.
- Improve the visual quality of Lancaster County and minimize the potential impacts of development such as noise, dust, and glare of lights.
- Improve the quality and efficacy of stormwater run-off while also providing opportunities for climatic control and reduced electricity costs.
- Contribute to the overall quality of life and the built environment in Lancaster County.

7.1.1 TREE PROTECTION AND APPLICABILITY MATRIX

The standards contained in this chapter shall apply to the following development conditions:

Development Condition	Applicability
New Construction (Except Single-Family and Two-Family Dwellings on Previously Platted Lots)	All standards apply.
Expansion of Parking Areas (Less than 50% of Total Existing Area or less than 12 spaces)	All standards apply only to the parking lot expansion areas.
Expansion of Parking Areas (50% or Greater of Total Existing Area or 12 spaces or more)	All new and existing parking areas and non-conforming street frontages per Section 7.1.4 shall be brought into full compliance with this chapter.
Building Expansion (Less than 50% of Existing Floor Area)	All standards shall apply only to the area around the addition that is parallel to any edge of the expansion area and extending to the property line or street pavement edge. This includes required street trees. (See diagram.) 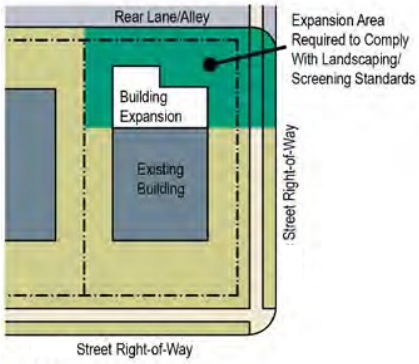
Building Expansion (50% or Greater of Existing Floor Area)	The entire site shall be brought into full compliance with this chapter.
Change of Use (From Residential to Non-Residential, OR any change of use which requires a more dense buffer yard)	The entire site shall be brought into full compliance with this chapter.
Change of Use (From Non-Residential to another Non-Residential)	The site shall be brought into compliance with Sections 7.1.2 and 7.1.3.
Building Interior and/or Exterior Renovation Only	Compliance with this chapter is not required.

A. REQUIRED SITE LANDSCAPING AREAS

The diagram below is intended to provide guidance by illustrating the type of landscaping areas and buffer yards required by this chapter. This diagram is not inclusive of the required landscaping and buffer areas for all development applications.

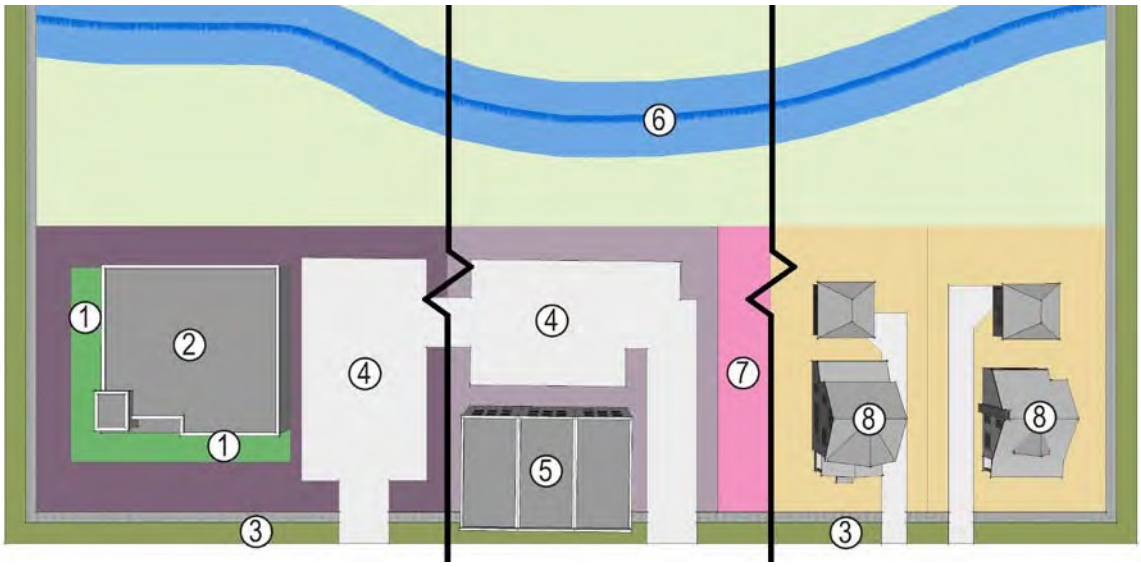

1. *Building perimeter landscaping (PB, NB, GB, and RB Districts only)*
2. *Commercial building (PB, NB, GB, RB Districts)*
3. *Planting strip (5-foot minimum width) and sidewalk*
4. *Parking areas*
5. *Mixed-use buildings (RMX, MX, IMX Districts)*
6. *Watercourse buffer (not applicable)*
7. *Required buffer yard*
8. *Single family detached residential lots (AR, RR, RN, LDR, MDR, UR, RMX Districts)*

B. LANDSCAPE PLAN REQUIRED

Prior to obtaining a Zoning Permit, an applicant must receive approval of a landscaping plan as per Chapter 9, Administration, that satisfies the requirements of this chapter.

C. REVISIONS TO LANDSCAPE PLAN

Revisions due to lack of plant availability may be approved by the Administrator if:

1. There is no reduction in the quantity of plant material.

2. There is no significant change in size or location of plant materials.

3. The new plants are of the same general category (i.e., canopy trees, understory trees, shrubs, groundcover) and have the same general design characteristics (mature height, crown spread) as the materials being replaced.

4. The new plants are appropriate to Lancaster County's local climatic conditions in terms of seasonal hardiness and ease of maintenance.

D. GENERAL PROVISIONS

1. Landscaping must be installed, inspected, and approved prior to the issuance of a Certificate of Occupancy. A Certificate of Occupancy accompanied by a bond as noted in B, below, may be granted to permit installation of required landscaping subsequent to occupancy of the building.

2. If the season or weather conditions prohibit planting, the developer may provide a bond, an irrevocable letter of credit, or other financial surety in an amount equal to 125 percent of the cost of installing the required landscaping to guarantee the completion of the required planting. The financial surety shall be canceled and/or returned upon completion of the required landscaping.

3. The owner of the property where required landscaping is planted shall be responsible for the maintenance and protection of all required plant and screening materials so as to continue their effectiveness. The owner shall replace any required plantings, which die or otherwise fail to satisfy the requirements of this chapter, within 180 calendar days with an equal or similar species and size. When plant material is severely damaged due to unusual weather conditions, disease, fire, or unforeseen natural occurrences, the owner shall have up to 365 calendar days to replant with submittal of a guarantee. Failure to maintain or replace dead, damaged, or diseased material or to repair a broken fence or wall shall constitute a violation.

4. If existing vegetation is to be used in complying with any part of this section, a plan for the protection of this vegetation during construction must be incorporated into the landscape plan and approved by the Administrator.

5. If a wall, fence or berm is used in conjunction with any vegetation to satisfy any requirements of this chapter, all required vegetation shall be placed on the side of the fence or wall of the development site under consideration.

E. ALTERNATIVE COMPLIANCE

1. Landscape plans proposing alternative methods of compliance may be used where unreasonable or impractical situations would result from application of the specific landscaping requirements in this chapter. Such situations may result from streams, natural rock formations, topography or other physical conditions, or from lot configuration, utility easements, or unusual site conditions.

2. The Administrator may approve an alternate plan which proposes different plant materials or placement, provided that quality, effectiveness, durability, and performance are equivalent to that required by this section.

3. Decisions of the staff regarding alternate methods of compliance may be appealed to the Board of Zoning Appeals in accordance with Chapter 9.

7.1.2 TREE PROTECTION ON PRIVATE PROPERTY

The preservation of existing trees or shrubs to satisfy the landscaping requirements of this chapter is expected. New development, through the protection of trees and existing vegetation, should be creative in design and placement of buildings, structures, parking, and other impervious surfaces as to preserve natural features and to complement the existing topography when practical.

A. ESTABLISHMENT OF TREE SAVE AREAS (TSA)

Trees survive the stress of construction best when they are left in stands or larger groupings. For that reason, it is encouraged that, wherever possible, development sites should be designed and developed so that Tree Save Areas (TSAs) are designated in a single, contiguous unit.

1. **Tree Credit Incentives:** Trees preserved in Tree Save Areas may be credited towards compliance with the requirements of this section according to the following calculation: 1

tree credit per 700 square feet of protected area. The extent of the canopy spread of the tree or trees at the outer edges of the Tree Save Area shall constitute the limits of the Tree Save Area for the purposes of this measurement. Watercourse buffer areas and wetlands are not eligible for the tree credit and the respective amount of parcel area is exempt from the baseline tree coverage requirement.

2. **Additional Incentives:** The following incentives are offered to encourage tree preservation within TSAs. Individual TSAs may only be counted toward one of the incentives listed below.

Action Taken	Incentive
a. Establishment of a Tree Save Area Along a Street	Reduction by up to 50% of required street tree plantings at the rate of 1 less street tree for every 700 square feet of TSA established.
b. Establishment of a Tree Save Area In or Adjacent to a Parking Area	Reduction by up to 50% of required parking lot plantings at the rate of 1 less canopy tree or 2 less understory trees for each 700 square feet of TSA established.
c. Establishment of a Tree Save Area In or Along a Required Buffer Yard	Reduction by up to 50% of required buffer yard plantings at the rate of 1 less canopy tree or 2 less understory trees for each 700 square feet of TSA established. The remaining buffer yard must still meet the required opacity as established in Section 7.1.5.

3. **Tree Save Area Requirements:** In order to qualify for the incentives offered in 1 and 2, above, designated Tree Save Areas must conform to the following standards:

   a. **Minimum Tree Density:** The TSA shall contain, as determined by an informal site assessment, a minimum tree density of at least one tree of 2.5" diameter at breast height (DBH) and a minimum of 10' in height per 700 square feet.

   b. **Tree Species**: In order to be established as a designated Tree Save Area, the trees contained in these areas shall primarily be a mixture of healthy and useful canopy deciduous trees.

   c. **Maintenance and Ownership:** When a TSA is established in association with the incentives as listed in this section, it should be designated, where possible, as a dedicated open space, or in a conservation easement.

   d. **Tree Removal Inside Tree Save Areas:** Trees that are in poor health, as determined by the Administrator, may be removed from Tree Save Areas. All tree removal within the TSA must have prior approval by the Administrator pursuant to the provisions of this section. However, in an emergency situation due to storm damage, or to alleviate an imminent hazard to the health, safety, and welfare of the citizens, or to repair property damage, prior approval for tree removal in previously approved designated areas is not required.

   e. **Dead or Unhealthy Trees**

      i. No credit will be allowed for any dead tree, any tree in poor health, or any tree subject to grade alterations.

      ii. The death or unhealthy state of any tree(s) used for tree credits, within 3 years of establishing the TSA, shall require the property owner to plant new trees equal to the number of credited trees.

      iii. If any tree(s) used for preservation credit is improperly protected or determined to be hazardous, the Administrator may require new trees be planted equal to the number of credit trees.

iv. The Administrator may require trees left outside preservations areas to be removed if improperly protected or determined to be hazardous.

7.1.3 STREET TREE AND BUILDING PERIMETER PLANTINGS

It is the desire of the County to maintain tree-lined, pedestrian-friendly streets specifically in Mixed-Use Districts and in Transitional and Special Districts. Street trees shade the pedestrian realm of the street, encourage cars to move more slowly, improve pedestrian safety by creating a buffer between the moving cars and the sidewalk, absorb stormwater, absorb pollutants from tailpipe emissions, and add value to the fronting properties.

A. STREET TREE PLANTING REQUIREMENTS

Street trees shall be planted in all rights-of-way adjacent to the development, between the street and the sidewalk, in accordance with the table and provisions below:

District	Requirement
AR, RR, RN, OSP Districts	Not required
MH, LDR, MDR, HDR, UR, RMX Districts	Rate: 1 Canopy Tree for every 40 feet of street frontage Spacing: Maximum of 50 feet on-center Location: In Planting Strip (5-foot minimum width)*
MX, IMX, PB, NB, GB, RB, INS, LI, HI, M Districts	Rate: 1 Canopy Tree for every 50 feet of street frontage Spacing: Maximum of 50 feet on-center Location: In Planting Strip (5-foot minimum width)* or Tree Well (25-square-foot minimum area)
MX, IMX, NB, GB Districts with On-Street Parking and Ground Floor Retail	Rate: 1 Canopy Tree for every 40 feet of street frontage Spacing: Maximum of 50 feet on-center Location: Tree Well (25-square-foot minimum area)*
Existing Development with Non-Conforming Frontages	See Section 7.1.1*

** Understory Trees may be substituted for Canopy Trees in existing development with planting strips less than 5 feet wide or tree wells less than 25 square feet.*

1. **Median Trees:** Whenever a boulevard street type is constructed, the developer or applicant shall also install trees in the boulevard median at the rate of 1 canopy tree for every 50 linear feet of road median. understory trees may be substituted for canopy trees in medians less than 10 feet wide. The maximum spacing between trees shall be 50 feet on-center.

2. **Existing County-Adopted Streetscape/Tree Planting Plan:** Where a County-approved existing tree pattern exists on a street, the placement of new trees shall be compatible with the established pattern/species.

3. **Private Drives for Commercial Development:** Private drives, including vehicular ways between parking areas and building frontages, which serve commercial lots shall meet the street tree planting requirements within this chapter.

4. **Residential Driveway/Alley:** Landscaping is not required along any residential driveway or alley.

B. STREET TREE SPECIFICATIONS

1. Where street trees are required, such trees shall be within the right-of-way and be planted in a planting strip between the sidewalk and the traveled way or in tree wells located along the street/sidewalk, except where the Administrator determines this impossible due to insufficient right-of-way, topography, utility conflicts, or conflicts with South Carolina Department of Transportation (SCDOT) operated roads. Where the Administrator

determines that it is impractical for street trees to be located within the right of way, compliance with this section may be achieved by planting street trees on private property.

2. Tree wells shall provide a root aeration zone around the base of a tree. If the adjacent sidewalk is less than 6 feet in width, tree grates shall be provided to cover the exposed area of soil and to widen the pedestrian passage zone along the sidewalk.

3. Street trees must (unless approved by the Administrator) maintain the same species, spacing, and distance from the street along both sides of the street.

4. The Administrator may approve the use of understory trees instead of canopy trees where such trees satisfy SCDOT requirements along State-owned roads.

C. BUILDING PERIMETER LANDSCAPING

1. **Applicability:** The following provisions for building perimeter landscaping shall apply to the PB, NB, GB, and RB Districts.

2. **Minimum Required Landscape Area:** A minimum 6 foot wide area shall be provided for landscaping along any side of the building facing a public right-of-way. Up to 25 percent of the building width along the street may be utilized for entrance walkways.

3. **Minimum Required Landscaping:** The minimum required landscaping shall consist of one of the following options every 40 linear feet:

   a. 2 understory trees; or

   b. 10 shrubs; or

   c. Any equivalent combination thereof.

This 40 foot requirement shall only serve as a ratio for establishing the minimum required landscaping. In locating the minimum required landscaping care shall be taken to ensure that adequate space is provided for the width of tree spread, height, and root system requirements.

7.1.4 PARKING LOT AREA LANDSCAPING

A. REQUIRED PARKING LOT LANDSCAPE AREAS

The diagram below is intended to provide guidance by illustrating the screening and landscape islands required by this chapter. This diagram is not inclusive of the required screening and landscaping islands for all new or expanded parking lots.

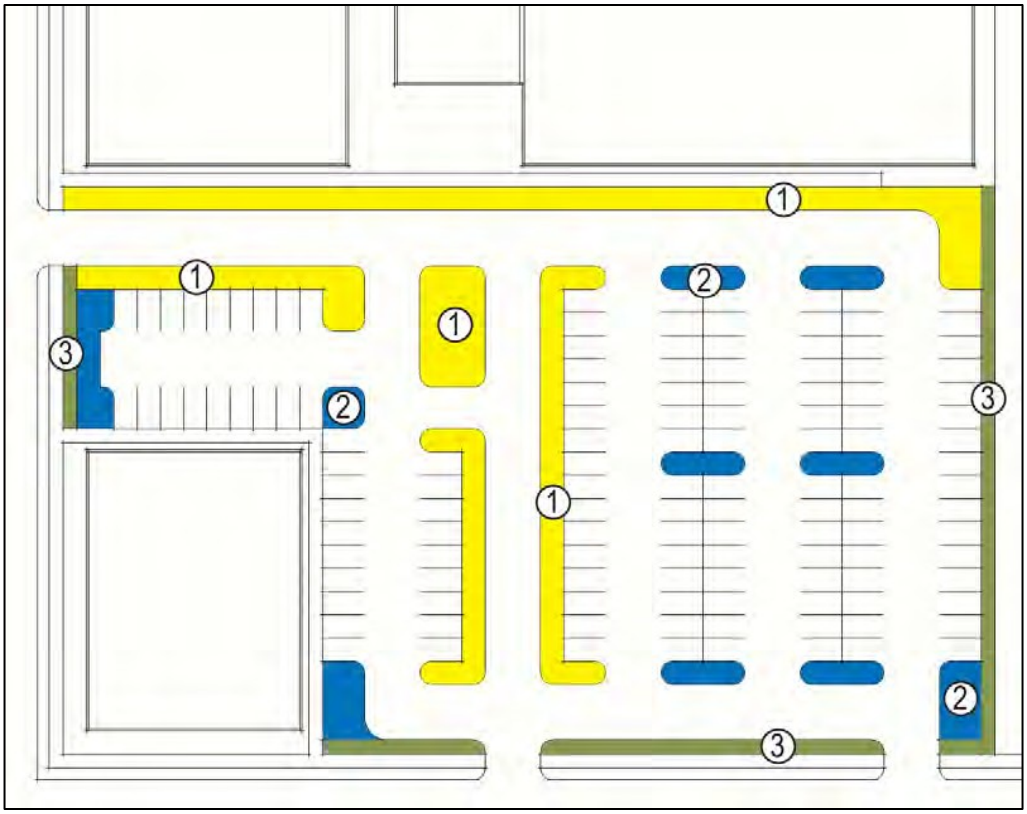

1. *Private drive islands*
2. *Parking lot islands/planting areas*
3. *Parking lot perimeter screening area*

B. EXEMPTIONS

Parking lots which serve industrial and automotive uses, as designated in the Use Table in Section 2.5.3, (whether for display of new or used vehicles for rental/sales/lease or for employee or customer parking) shall be exempt from the parking area landscaping and curbing requirements of Section 2.5.3 if a 50 foot wide landscape area with a semi-opaque screen is provided around any portion of the lot adjacent to another property or a public or private street.

C. PARKING LOT PERIMETER SCREENING

1. **Applicability:** The following provisions for parking lot perimeter screening shall apply to all parking lots containing more than 10 spaces.

2. **Required Screen Along Streets:** Parking lots shall be screened from sidewalks and streets (public and private) by a semi-opaque screen to an average height of 3 feet, along with canopy trees planted with a maximum spacing of 40 feet on-center, for screening of car lights and glare.

   a. Effective screening devices may include decorative brick walls, wood fences, earth berms, architectural features (e.g., facade extension, pergolas) and tight evergreen hedges which shall reach the required height within two years of planting, or any combination of the above.

   b. The height of the screen, except for trees, shall not exceed 4 feet at any time.

c. Optional 8-foot openings shall be allowed every 50 feet to permit pedestrian passage where a formal connection to a sidewalk or pathway is provided. Openings for permitted driveways and their associated sight triangles are also permitted.

3. **Required Screen Along Adjacent Properties:** Parking lots shall be screened from adjacent properties by canopy trees planted with a maximum spacing of 40 feet on-center. Trees planted adjacent to parking lots to satisfy the buffer yard requirements in Section 7.1.5 may count toward this requirement.

4. **Minimum Width Reserved for Perimeter Screens:** 10 feet

D. PARKING LOT INTERIOR LANDSCAPING

1. **Applicability:** The following provisions for parking lot interior landscaping shall apply to all parking lots containing more than 10 spaces.

2. **Parking Lot Islands/Planting Areas**

   a. The minimum number of trees shall be 1 canopy tree per 10 parking spaces. Two understory trees may be used to replace 1 canopy tree for no more than 1/3 of the required canopy trees.

   b. All trees and plantings shall be in planting areas or landscape islands, protected by curbs or wheel stops, with a minimum area of 180 square feet and a minimum width of 10 feet.

   c. Parking lot islands or planting areas with a minimum of 1 canopy tree or 2 understory trees shall be placed at the end of every row of parking.

   d. No parking space shall be more than 50 feet from the base of a tree. Parking lots fully designed using bioretention areas, as outlined in Section 7.1.4.F below, are exempt from this requirement.

3. **Private Drive Islands:** All private drives that channel traffic within the parking area, including vehicular ways between parking areas and building frontages, shall be separated from adjacent sidewalks or rows of parking by a landscaped area with a minimum width of 6 feet, containing canopy trees planted at a maximum spacing of 40 feet on-center. Understory trees may be substituted for canopy trees at the rate of 2 understory trees for every required canopy tree for up to 1/3 of the total required canopy trees. Traffic control islands required by SCDOT may be raised concrete or striped.

4. **Pedestrian Access:** Sidewalks or paths may be provided within required landscaped areas to address pedestrian needs.

.

E. CURBING

All parking areas and landscaped islands shall either be curbed using a vertical curb or wheel stops. Curbing may be discontinuous or perforated allowing stormwater to enter landscaped areas constructed for bioretention (rain gardens). Where bioretention areas are constructed, wheel stops may be used in place of curbing. Where landscaping is above grade, curbing must be continuous to prevent landscaping material from eroding into the parking area.

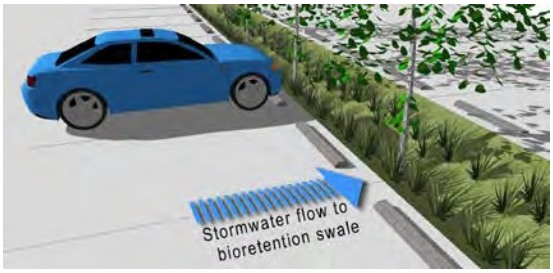

Discontinuous curbing or wheel stops are permitted to allow stormwater infiltration in bioretention areas.

F. BIORETENTION AREAS/RAIN GARDENS

1. **Rain Gardens Permitted:** Required parking lot landscaping may be incorporated with one or more consolidated bioretention areas (rain gardens). Bioretention areas shall be located where it is most practical to capture stormwater, manage parking lot traffic, and facilitate pedestrian use, including adjacent to and connecting with vegetated areas on the perimeter of a parking lot. Bioretention areas shall be designed and landscaped to trap and mitigate runoff from paved surfaces consistent with the description and intent of the South Carolina Department of Health and Environmental Control: Stormwater Best Management Practices Manual.

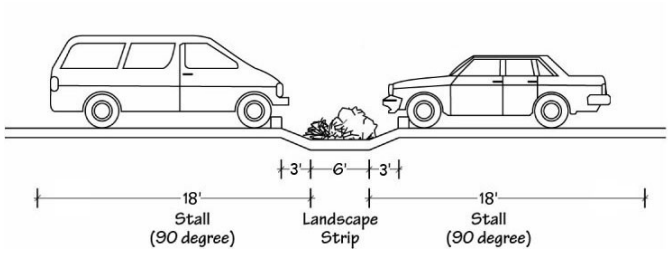

Required parking landscaped areas may include up to 3 feet of the front of a parking space as measured from a line parallel to the direction of the bumper of a vehicle using the space, as shown.

2. **Parking Dimension Bonus:** A portion of the space devoted to motor vehicle parking may be landscaped instead of paved, as follows:

   a. A landscaped area may include up to 3 feet of the front of the parking space as measured from a line parallel to the direction of the bumper of a vehicle. The landscape strip shall be a minimum of 6 feet in width.

   b. The landscaped area within the parking space counts toward parking lot landscaping requirements and toward any overall site landscaping requirements.

   c. In order to utilize this parking dimension bonus, landscaping must be below grade and designed as a bio-retention area.

G. ADDITIONAL STANDARDS FOR LARGE PARKING LOTS (GREATER THAN 100 SPACES)

Pedestrian Walkways: For every 4 traffic aisles in parking bays, a landscape island between 2 back-to-back parking bays with a pedestrian walkway shall be provided and shall extend the entire length of the parking bay or aisle. The width of such landscape island shall be a minimum of 15 feet, measured from the back of curb to back of curb, and the width of the pedestrian walkway shall be a minimum of 5 feet. Trees shall be planted along the pedestrian walkway at the rate of 1 canopy tree or 2 understory trees for every 50 linear feet. Crosswalks shall be provided across private drives/driveways from these pedestrian islands to connect to any adjacent building entrances, private walkways, and public sidewalks along the street frontage.

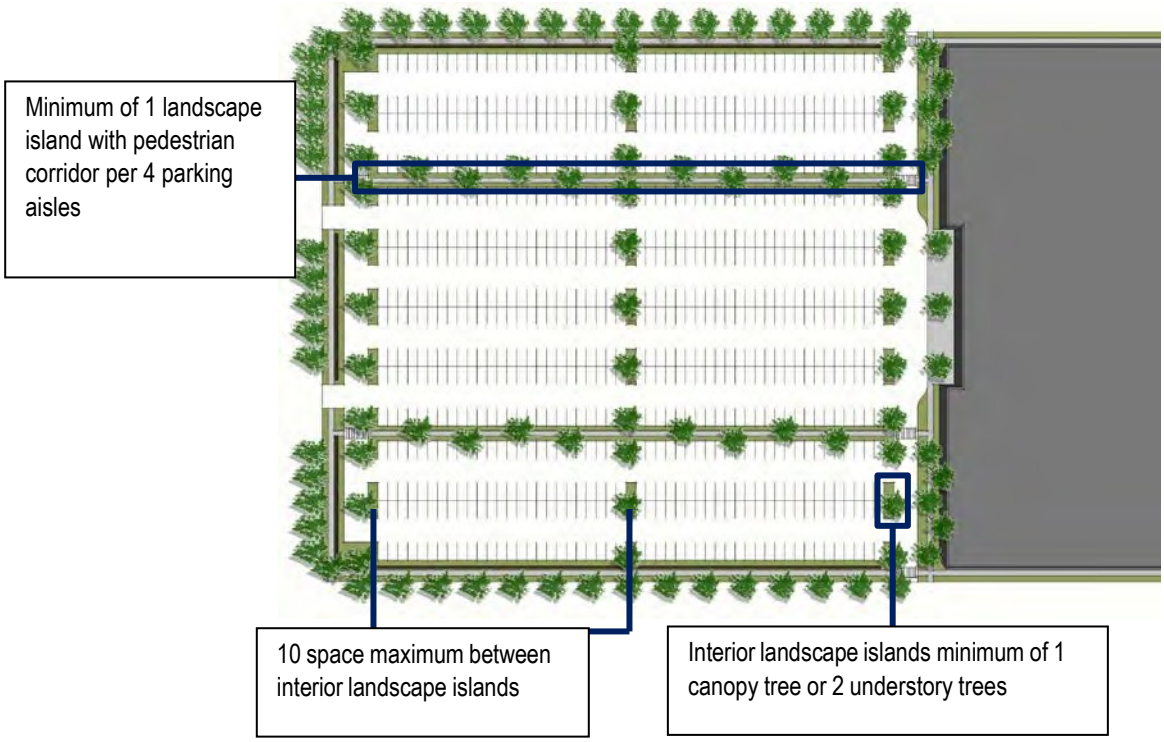

7.1.5 BUFFERS AND SCREENING

Buffer yards are planting areas designed to separate incompatible adjacent uses and provide privacy and protection against potential adverse impacts of an adjoining incompatible use or zoning district.

A. REQUIRED BUFFER YARDS

1. **Required Yards by District:** Buffer yards shall be required in accordance with the table below, and the buffer yard types defined Section 7.1.5.B.

District of Proposed Development	Adjacent Zoning District					
	AR, RR, RM, OSP, MH, LDR, MDR, HDR	UR, RMX, INS	NC, GB	MX, IMX, PB, NB, GB	RB	LI, HI, M
AR, RR, RN, OSP, MH, LDR, MDR, HDR	X	X	X	X	C*	C*
UR, RMX, INS**	A	X	X	X	X	X
NB, GB**	B	A	X	X	X	X
MX, IMX, PB, NB, GB	A	A	X	X	X	X
RB	C	C	B	A	X	X
LI, HI, M	C	C	C	C	B	X
* Only required where adjacent, more intense use is pre-existing and no equivalent buffer is provided on the adjacent property ** Only multifamily and non-residential uses shall provide buffers between adjacent single family uses in detached homes						X = No Buffer Required

2. **Required Buffer Yards around Existing Single Family Homes in the NB, GB, RB, LI, and HI Districts:** A Type A buffer shall be required for any non-residential development that occurs immediately adjacent to an existing single family home located within the NB, GB, RB, LI, and HI Districts. This buffer may be removed at such time that the existing single family home changes to a multifamily or non-residential use.

3. **Additional Buffer and Screening Requirements for Specific Uses:** Additional buffer and screening requirements for certain specific uses are included in use regulations for each use found in Chapter 5.

4. **Location:** Buffer yards are intended to be constructed along the perimeter of the property; however, when there is irregular topographic conditions such as when the perimeter of the property is at a lower grade than the use being screened, the Administrator may require the relocation of the required buffer yard in order to better serve its purpose.

5. **Relationship to Required Yards and Setbacks:** Where front, side, and rear yards are required by this chapter, buffer yards may be established within such yards. If a yard requirement is less than the minimum buffer requirement, the buffer width requirement shall override the minimum yard requirement.

6. **More Restrictive to Apply:** Where a proposed use or development-type abuts multiple use types or zoning districts along the same side or rear yard, the largest buffer requirement will apply along the entire side or rear property line.

7. **Buffer Location Restrictions**: Buffers shall not be located on any portion of any existing or proposed street right-of-way or utility easement (unless permitted by the easement holder).

B. BUFFER YARD TYPES

1. **Type A Buffer Yard**: A Type A buffer yard is a planting strip intended to separate uses, provide vegetation in densely developed areas, and enhance the appearance of individual properties.

Type A Buffer Yard Options	Minimum Depth	Minimum Plantings per 100 linear feet	Wall, Fence, or Berm	Required Opacity
Option 1	20 feet	1 Canopy Tree 2 Understory Trees 8 Evergreen Shrubs	Not Required	Semi-opaque (i.e., having only seasonal horizontal openings not exceeding 25% of the total width from the ground to a height of 6 feet within 2 years of planting)
Option 2	10 feet	2 Canopy Trees 2 Understory Trees 12 Evergreen Shrubs	Not Required	

2. **Type B Buffer Yard**: A Type B buffer yard is a medium density screen which is intended to create a visual separation between uses and zoning districts.

Type B Buffer Yard Options	Minimum Depth	Minimum Plantings per 100 linear feet	Wall, Fence, or Berm	Required Opacity
Option 1	20 feet	2 Evergreen Trees 1 Canopy Tree 2 Understory Trees 12 Evergreen Shrubs	Not Required	Semi-opaque (i.e., having only seasonal horizontal openings not exceeding 10% of the total width from the ground to a height of 8 feet within 2 years of planting)
Option 2	10 feet	1 Evergreen Tree 1 Canopy Tree 3 Understory Trees 24 Evergreen Shrubs	Not Required	

3. **Type C Buffer Yard**: A Type C buffer yard is intended to provide a very dense all-season sight barrier to significantly separate uses and zoning districts. It is intended to reduce intrusive lighting and noise from adjacent properties.

Type C Buffer Yard Options	Minimum Depth	Minimum Plantings per 100 linear feet	Wall, Fence, or Berm	Required Opacity
Option 1	40 feet	4 Evergreen Trees 4 Canopy Trees 4 Understory Trees 36 Evergreen Shrubs	Not Required	Completely opaque (i.e., having no horizontal openings from the ground to a height of 8 feet within 2 years of planting)
Option 2	25 feet	4 Evergreen Trees 4 Canopy Trees 4 Understory Trees	Wall or Fence	
Option 3	10 feet	2 Evergreen Trees 2 Canopy Trees 2 Understory Trees 12 Evergreen Shrubs	Berm	

C. BUFFER DETAILS

1. **Fences and Walls:** Any required 6-foot-tall privacy fence or wall shall be made of any combination of treated and stained wood, brick, stone, wrought iron, polymer, decorative face block, or other composite material as approved by the Administrator and maintained in a like-new manner with the finished side facing towards the zone to be buffered (protected). The material(s) used shall provide an opaque fence. All required vegetation shall be placed on the unfinished side of the fence or wall. A chain link fence with slats is not considered a solid fence for purposes of this section.

2. **Berms:** All berms, if provided, shall not exceed a slope with maximum rise of 1 foot to a run of 2 feet (a ratio of 1:2) and a maximum height of 4 feet with a compacted flat top of at least 15 inches wide. All berms, regardless of size, shall be stabilized with a ground cover or other suitable vegetation or permanent slope retention device. A combination of trees and shrubs are to be installed in an appropriate design scheme along the berm for appearance, durability, and maintenance as approved by the Administrator. Berms taller than 4 feet shall be approved by the Administrator on a case-by-case basis.

3. **Existing Vegetation, Fences, Walls, and Berms:** Existing vegetation berms, walls, or fences within the landscaped area, but not including chain link fencing, may be used to fulfill the standards for the type of landscaping required provided that these elements are in good condition as determined by the Administrator. Where existing vegetative areas are to be credited, they shall be shown on the plan with a certification by a licensed landscape architect that the existing vegetation fully complies with the landscape requirements.

4. **Riparian Buffer:** Any required riparian buffer may be used to satisfy other buffer requirements, provided the plants are equivalent in number and type required by the landscape ordinance. Additional plant materials shall be installed in the riparian buffer to satisfy any remaining plant requirements. Additional plantings shall meet best management practices as determined by the Administrator.

7.1.6 LOADING AREAS AND UTILITIES SCREENING

A. DUMPSTERS, MECHANICAL EQUIPMENT, UTILITIES AND STORAGE AREAS

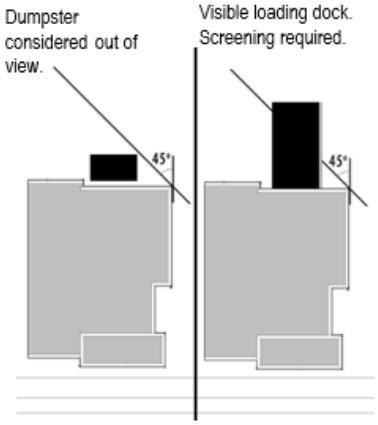

1. **Dumpsters, Loading Docks, Mechanical Equipment, and Utility Structures**: All such structures shall be completely screened from view from public and publicly-accessed streets and any adjacent residential or mixed-use properties to a height of 1 foot above the structure or 8 feet, whichever is less, by a wall or planted hedge. A device is considered out of view of the public street if it is within the 45 degree angles projected from the building edges (see diagram at right), except on a corner lot or lot with public drives along more than one side. Where a Type B buffer exists or is installed along adjacent property lines, this shall be considered sufficient screening from adjacent properties.

2. **Outdoor Storage Areas:** All unenclosed outdoor storage areas greater than 100 square feet shall also be screened from adjacent properties and streets to a height of 8 feet by a wall, fence, or planted hedge. Where a Type B buffer exists or is installed along adjacent property lines, this shall be considered sufficient screening from adjacent properties.

3. **Materials for Dumpster Enclosures**: Where possible, enclosures for dumpsters are encouraged to be constructed with materials that are compatible with the design and materials of the principal building. Dumpster enclosures shall be installed using the following materials:

   a. **Brick fence, brick/split face block, or decorative block.**

   b. **Chain-link fence with slats, solid-wood fence, or fabricated metal fence:** If these materials are used a semi opaque, continuous planting wall must be installed around the enclosure with shrubs that will grow to a height of 8 feet with only seasonal horizontal openings within 5 years.

   c. **Chain-link fence**: If this material is used a completely opaque, continuous planting wall must be installed around the enclosure with shrubs that will grow to a height of 8 feet within 5 years.

4. **Exemptions:** Dumpsters, loading docks, mechanical equipment, utility structures, and outdoor storage areas in the LI and HI districts are not required to be screened from view from streets, residential, or mixed-use properties if they are located more than 200 feet away. An administrative exemption may also be granted from the screening requirements of this section if the Administrator determines that site specific constraints render compliance impracticable.

B. OTHER UTILITY STRUCTURES

Utility equipment and facilities associated with on-site electric, cable, telephone, gas, or other similar utility, including ground-based electrical transformers and power meters, shall be placed in service areas on the sides or rear of buildings, and shall be screened, to the extent possible, with evergreen plantings or other acceptable alternative approved by the Administrator. Areas around this equipment and facilities shall remain clear based on each utility company's guidelines.

7.1.7 GENERAL INSTALLATION AND MAINTENANCE STANDARDS

A. LANDSCAPE PLAN SUBMITTAL REQUIREMENTS

When a development application is made on any land where the landscaping requirements of this chapter are applicable, such site/subdivision plan application shall be accompanied by a landscape plan as outlined in the Submittal Checklist in Appendix C, Manual of Specifications, Standards, and Design (MSSD).

B. PLANT MATERIAL SPECIFICATIONS

1. **Canopy (Large Shade) Trees:** All required canopy trees must be a native or locally-adapted species with an expected mature height of 35 feet or greater and an expected mature crown spread of 30 feet or greater. When planted, canopy trees must be a minimum of 8 feet high, and have a minimum caliper of 2.5 inches as measured at breast height (or approximately 4.5 feet above grade – DBH). Multi-stemmed trees shall have at least 3 stalks (minimum 1-inch DBH) and be at least 8 feet in height when planted.

2. **Evergreen Trees:** All required evergreen trees must be a native or locally-adapted species with green foliage that lasts through all seasons and an expected mature height of 20 feet or greater. Evergreen trees shall be a minimum of 8 feet in height and have a 2.5-inch DBH when planted.

3. **Understory (Small) Trees:** All required understory trees must be a minimum of 6 feet high and 2-inch DBH when planted. When mature, understory trees shall be between 15 and 30 feet in height.

4. **Shrubs:** Shrubs planted as part of a required buffer yard, shall meet the following specifications:

   a. **Deciduous Shrubs:** All deciduous shrubs shall be a minimum of 18 inches in height when planted and shall reach a height of 30 inches and a minimum spread of 30 inches within 2 years of planting.

   b. **Evergreen Shrubs:** All evergreen shrubs shall be a minimum of 30 inches in height when planted and shall reach a height of 48 inches and a minimum spread of 36 inches within 2 years of planting.

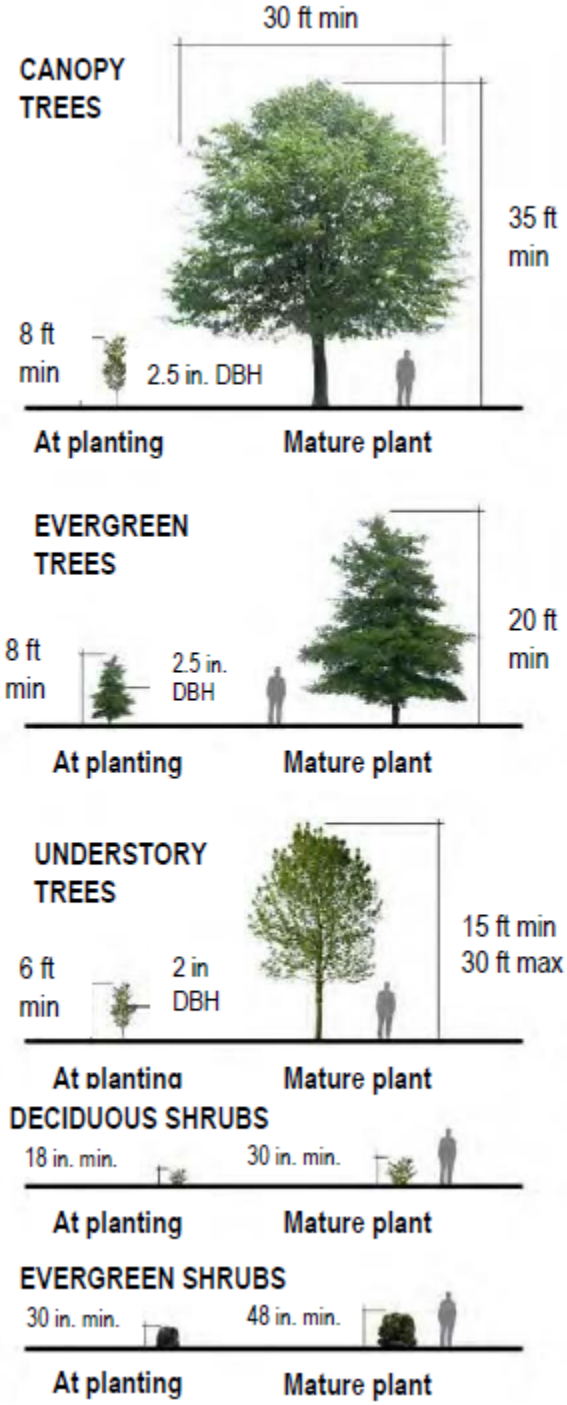

5. **Groundcover:** All required groundcover plants must be a minimum of 1.5 to 2.5-inch pots with a 4-inch minimum length when planted. Groundcover must be planted with on-center spacing equivalent to the average mature spread for each particular species.

C. PLANT STANDARDS

1. **General Material Standards**: All plant materials shall be installed in accordance with the standards found in the latest edition of American Standards for Nursery Stock published by the American Association of Nurserymen. After installation, plant materials shall be mulched with a 3-inch layer of appropriate material.

2. **Recommended Species List**: Plant materials utilized in meeting the requirements set forth in this section may be chosen from the Lancaster County recommended trees and shrubs list located in Section 4.3.2.J.6.vii. The use of drought-tolerant vegetation that is native to the area is encouraged to reduce dependency upon irrigation.

D. GENERAL CONSTRUCTION STANDARDS

1. **Easements & Right-of-Ways:** Nothing shall be planted or installed within an underground or overhead utility easement or a drainage easement without the consent of the Administrator and the easement holder at the time of site plan approval.

2. **Grading and Development in Required Landscape Areas:** The required landscaping shall not contain any development, impervious surfaces, or site features that do not function to meet these standards or that require removal of existing significant vegetation. If grading within a planting yard is proposed, slopes of 3:1 or less are encouraged to ensure the proper transition of grades to the adjacent property and to facilitate landscaping and maintenance.

3. **No Bare Soil Permitted:** All portions of the landscaping area not planted with shrubs and trees or covered by a wall or other screening device shall be planted with ground cover and/or grass or covered with natural mulch with a minimum depth of 3 inches.

4. **Overhead Power Lines:** Where overhead power lines are present, small trees (approximately 20 feet in height at maturity) must be utilized. One small maturing tree is required for every 35 feet of property abutting a street. (Utility lines such as cable and phone do not constitute a hazard, and large maturing trees should be used if only these are present.)

5. **Sight Distance:** All plant materials within the sight distance triangle at an intersection, or driveway access point as defined in Chapter 6 shall comply with Section 6.14.1.D – J. (Exception: SCDOT has separate provisions for state-maintained roadways.)

E. PROTECTION OF EXISTING TREES DURING CONSTRUCTION

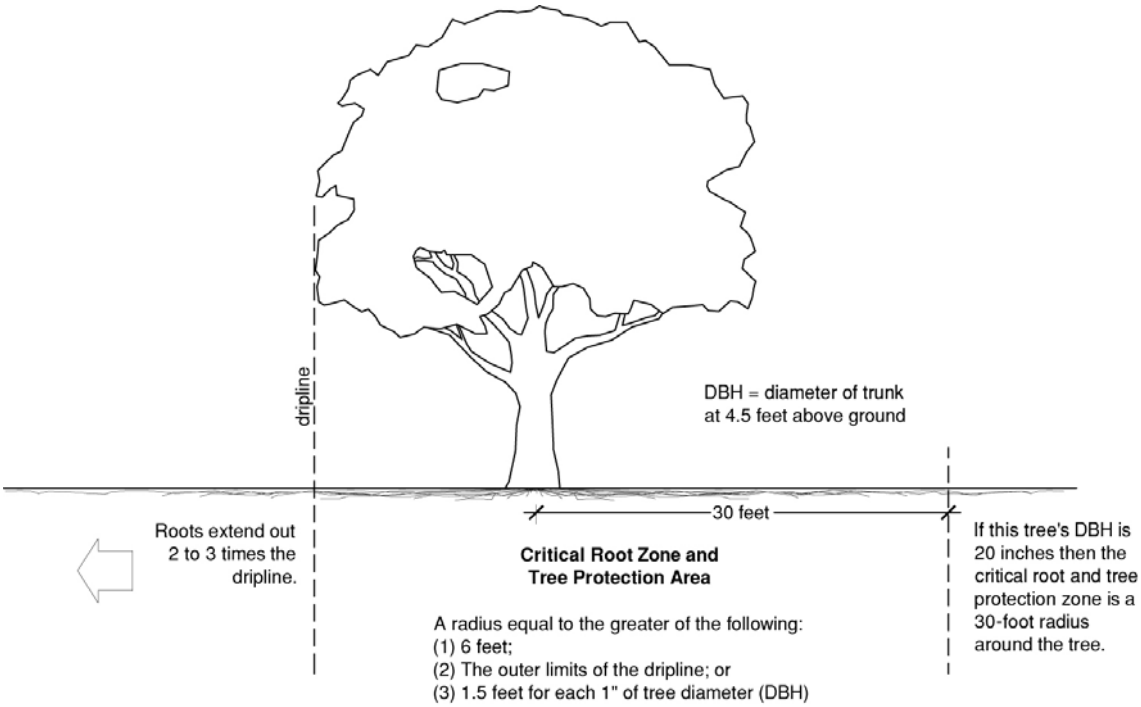

1. Protective barricades shall be placed around all trees designated to be saved, prior to the start of development activities or grading. Protective barricades shall remain in place until development activities are completed. The following conditions are required:

   a. Barricades may consist of 2 x 4 inch posts with 1 x 4 inch rails, orange safety fence, or a similar treatment and shall remain in place until development activities are complete.

   b. Signs indicating that the barricade is protecting a tree save area within which construction traffic and storage of materials are not permitted shall be placed at a rate of 1 sign for every 100 linear feet of barricade.

   c. The barricaded area shall remain free of all building materials, stockpiled soil, or other construction debris.

   d. Construction traffic, storage of vehicles and materials, and grading shall not take place within the protective areas of the existing trees.

2. Barricades shall be erected at a recommended minimum distance from the base of protected trees according to the following standards:

   a. For trees 10 inches or less DBH: Place at a minimum distance of 6 feet from the base of each protected tree or outside the dripline, whichever is greater.

   b. For trees between 10 and 20 inches DBH: Place at a minimum distance equal to 1.5 feet for each 1 inch in caliper or outside the dripline, whichever is greater.

   c. For trees of 20 inches or greater DBH: Place at a minimum distance of 30 feet from the base of each protected tree or outside the dripline, whichever is greater.

3. Land disturbance within a tree dripline is prohibited except for driveway access points, sidewalks, curb, and gutter.

4. Where grading within a tree dripline cannot be avoided, cut and fill shall be limited to 25 percent of the area within the dripline, and tree roots must be pruned with clean cuts at the edge of the disturbed area. (No fill shall be placed within the dripline of a tree without venting to allow air and water to reach the roots.)

F. INSPECTION

The Administrator may inspect the site after the issuance of a Certificate of Occupancy in order to ensure compliance with the approved site plan and to ensure that the landscape is properly maintained. The Administrator may issue a Notice of Violation to comply with the provisions of this ordinance if warranted upon an inspection under the provisions of Chapter 9 of this ordinance.

G. REPLACEMENT OF DISTURBED AND DAMAGED VEGETATION

Without prior approval, the disturbance of any required landscaped area or vegetation required by this ordinance shall constitute a violation. All disturbed landscaped areas and vegetation shall be replanted to meet the standards of this section, the stormwater regulations in Chapter 8, and the approved site or sketch plan (landscape plan).

7.2 PARKING AND DRIVEWAYS

7.2.1 PURPOSE AND INTENT

Parking lots and similar facilities are necessary elements in the built environment. However, these facilities can cause negative impacts including increased stormwater volume, velocity, and pollutants; increased surface level heat and glare; reduction in the efficiency of the connecting street system; reduction in the operations of the surrounding pedestrian and bicycle network; and interruption of a vibrant and attractive streetscape character. For these reasons, it is the intent of this chapter to impose regulations that mitigate the negative effects of parking lots in Lancaster County, preserve the character of the community, and protect the health, safety, and general welfare of Lancaster County's residents.

7.2.2 APPLICABILITY

The provisions of this chapter shall apply to all new and expanded development, as well as any changes in use that result in an increase in the minimum amount of required parking of at least 5 spaces or 10 percent of the existing spaces, whichever is greater.

7.2.3 PERMITTED PARKING LOCATIONS

The following table details the permitted parking locations for each district according to the building types detailed in Chapter 3 of this ordinance. Additional locational requirements may apply to parking areas for specific uses. Such requirements are outlined in Chapter 5, Use Regulations.

		Civic	Detached House	Townhouse	Apartment	General	Mixed-Use	Industrial	All Other Bldgs
Rural	AR	U	U	n/a	n/a	n/a	n/a	n/a	U
	RR	U	U	n/a	n/a	n/a	n/a	n/a	U
	RN	U	n/a	n/a	n/a	n/a	n/a	n/a	U
	RUB	U	n/a	n/a	n/a	n/a	n/a	n/a	U
	MH	U	U	n/a	n/a	n/a	n/a	n/a	U
Transitional	LDR	U	U	–	–	–	–	–	–
	MDR	U	U	–	–	–	–	–	–
	HDR	C	U	–	–	–	–	–	–
	PB	U	–	A	A	A	-	–	–
	NB	U	–	B	B	C	-	–	–
	GB	U	–	B	B	U	U	–	–
	RB	U	–	B	B	U	U	–	–
Special	INS	B	U	B	B	B	B	–	–
	OSP	-	-	-	-	-	-	-	-
	LI	U	–	–	–	U	U	U	U
	HI	U	–	–	–	U	U	U	U
	M	U	–	–	–	U	U	U	U
Neighborhood	UR	C	U	B	B	–	B	–	–
	RMX	B	U	B	B	C	B	–	–
	MX	B	–	B	B	B	B	–	–
	IMX	B	–	B	B	B	B	B	–

Permitted Parking Configurations

(Also see diagrams on next page)

Location A – *Parking permitted in 3rd Layer only*

Location B – *Parking permitted in 2nd and 3rd Layers only*

Location C – *Parking permitted in 2nd and 3rd Layers. Parking in 1st Layer restricted to one drive aisle with two bays.*

U – *Unrestricted*

PERMITTED PARKING CONFIGURATION DIAGRAMS	
	Location A *Parking permitted in 3rd Layer only* **1st Layer** – distance from right-of-way to front of building **2nd Layer** – 20 feet **3rd Layer** – remainder of lot
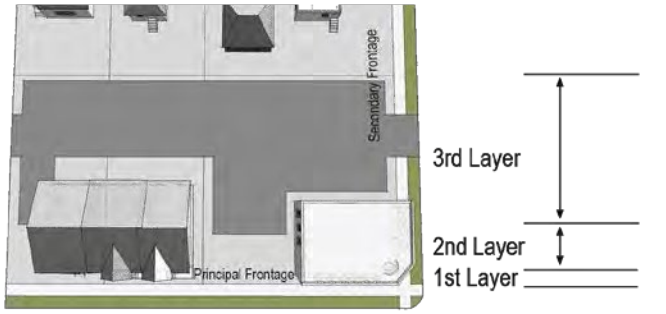	**Location B** *Parking permitted in 2nd and 3rd Layers only* **1st Layer** – distance from right-of-way to front of building **2nd Layer** – 20 feet **3rd Layer** – remainder of lot
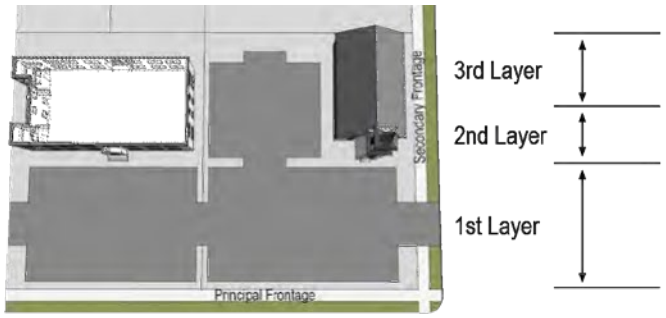	**Location C** *Parking permitted in 2nd and 3rd Layers. Parking in 1st Layer restricted to one drive aisle with two bays.* **1st Layer** – distance from right-of-way to front of building **2nd Layer** – 20 feet **3rd Layer** – remainder of lot
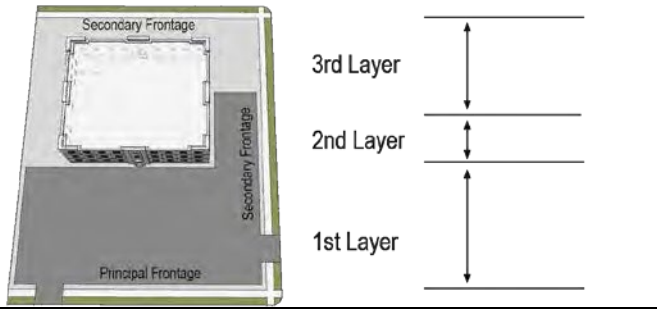	**U – Unrestricted** *Parking permitted in all layers* **1st Layer** – distance from right-of-way to front of building **2nd Layer** – 20 feet **3rd Layer** – remainder of lot

7.2.4 OFF-STREET PARKING AND LOADING REQUIREMENTS

If required, permanent off-street parking (including on-street parking and bicycle parking in accordance with the requirements below) shall be provided at the time of erection, alteration, enlargement, establishment, or change of use of any building or open use of land which requires additional off-street parking.

A. PARKING REQUIREMENTS BY USE TABLE

The following table details the required minimum and maximum (where applicable) parking ratios by major land use. All area calculations use gross leasable area (GLA). For uses not covered in this table, the parking requirements shall be those of the most similar use as determined by the Administrator.

Use Category	Minimum Required Auto Spaces
Residential	
Dwelling - Single Family & Two Family	1 per unit
Dwelling – Three Family & Four Family	1.5 per unit
Dwelling - Multifamily & Townhome	1.5 per unit
Dwelling - Accessory	1 space per unit
Live-Work Units	1 per 500 sf
Residential Care Facilities	1 per 2 units
All Other Residential Uses	1 per unit
Lodging – All Uses	1 per room
Office/Service	
Medical Clinic	1 per 350 sf
All Other Office/Service Uses	1 per 500 sf
Commercial/Entertainment	
Amusements (Indoor & Outdoor)	No requirement
Restaurant	1 per 250 sf
Theater (Indoor & Outdoor)	1 per 80 sf in auditorium
All Other Commercial/Entertainment Uses	1 per 400 sf
Civic	
Places of Assembly (Residential Districts)	No requirement
Places of Assembly (All Other Districts)	1 per 80 sf in main assembly hall
Private Recreational Facility	1 per 250 sf
All Other Civic Uses	1 per 500 sf
Educational/Institutional	
Child/Adult Day Care Centers (6 of more persons)	1 per 500 sf
All Other Educational/Institutional Uses	1 per 1000 sf
Automotive	
Vehicle Services – Minor Maintenance/Repair	1 per gas pump and repair bay
Vehicle Services – Major Repair/Body Work	2 per repair bay
All Other Automotive Uses	1 per 400 sf of office space
Industrial/Wholesale/Storage – All Uses	No requirement
Agricultural – All Uses	No requirement
Infrastructure – All Uses	No requirement

(Ord. No. 2019-1620, 12.9.19; Ord. No. 2020-1645, 2.24.20)

B. MAXIMUM PARKING

The minimum parking requirements above have intentionally been set well below general market expectations as a means to mitigate the negative aspects of paved surfaces on the environment such as excessive water runoff, water pollution, and urban heat island effect. To this end, there shall also be a maximum parking standard set as follows:

1. **Maximum Parking Standard:**

   a. Twice the minimum number of spaces established for a use as outlined in Section 7.2.4A above,

   b. If there are no minimum parking requirements for the use given in Section 7.2.4A above, the maximum parking standard shall be 35 percent of the site area.

2. **Exceptions**

   a. **Residential Development**: Dwelling-Single Family and Dwelling-Two Family uses are exempt from the maximum parking standard.

   b. **All Other Development**: In multifamily, commercial and mixed-use development, parking areas may be provided which exceed the maximum standard given above if stormwater control structures are installed, in accordance with Chapter 8, such that nitrogen runoff from any parking area above the maximum standard is reduced by at least 30 percent.

C. EXEMPTIONS AND ADJUSTMENTS

1. **Exemptions:** Uses in the AR, RR, RN, OS, and IMX Districts are exempt from the minimum parking requirements of this subsection.

2. **Commercial Uses in Mixed-Use Districts**: All commercial uses in RMX and MX Districts shall provide all required parking on-site at a rate of one space per 400 square feet. The use of on-street spaces shall not be permitted in this calculation.

3. **Residential Care Facilities**: The Administrator may authorize a reduction in off-street parking requirements for multifamily dwellings that provide Residential Care Facilities (including dwelling two family and multifamily buildings of 4 or more units) to no less than 3 off-street parking spaces for each 4 dwelling units or fraction thereof. Should a change of use occur such that the building is no longer providing Residential Care Facilities as the primary use, parking requirements shall meet the minimum ratio for residential uses as required in the table above.

4. **Tree Preservation:** The minimum number of parking spaces required may be adjusted by the Administrator when it has been determined that the reductions are necessary to preserve a healthy tree or trees (with a 12 inch or greater diameter at breast height) from being damaged or removed.

D. SATELLITE PARKING

1. **Proximity to Use**: If the off-street parking spaces required by this section cannot be reasonably provided on the same lot as the principal use, such spaces may be provided in a satellite parking area on any land within 600 feet of any public entrance to the principal use.

2. **Shared Satellite Parking**: Upon approval by the Administrator, satellite parking facilities may be shared by two or more uses which do not share normal operating hours.

3. **Parking for Permitted Uses Only:** If a satellite parking area is utilized to fulfill parking requirements, the owner or authorized agent for the land upon which such remote parking is located shall restrict the use of such parking area for parking only in connection with the use or structure for which such remote parking is provided. Such restriction shall be recorded by

a declaration of restrictions properly filed with the Register of Deeds of Lancaster County, which may be released only by written consent of the County. Remote parking for a particular use shall not be established in any district that does not allow that use.

7.2.5 VEHICLE PARKING DESIGN STANDARDS

All off-street parking areas, except those on single family residential lots greater than 1 acre, shall conform to the following standards.

A. PARKING AREA GENERAL DESIGN STANDARDS

1. Parking areas shall be located and designed to avoid undue interference with the use of public rights-of-way, driveways, or pedestrian ways. Parking stalls shall not be located in areas that would require backing into access driveways or streets except where allowed for residences or when no other practical alternative exists as determined by the Administrator or County Engineer.
2. Parking design and location shall be in accordance with the Lancaster County MSSD.
3. Parking stalls shall be located a minimum of 10 feet from public rights-of-way and buildings to allow sufficient separation for sidewalks, landscaping, and other site features except along the backs of buildings in areas designed for loading and unloading.
4. Parking shall not be located in landscaped, open space or tree save areas.
5. Minimum parking areas shall be kept free of material storage, including portable containers, and outdoor display/sales except on a temporary basis as part of an approved temporary use.
6. Parking areas shall be maintained to provide for vehicle access and shall be kept free of litter, debris, and potholes.
7. Parking for service vehicles shall be designated, located, and screened to minimize the view from adjacent properties and rights-of-way, generally at the rear of buildings per the screening regulations in Section 7.1.
8. Vehicle storage or display areas shall be identified on the site plan distinct from customer and employee parking areas and shall comply with parking access, location, and design requirements, except that striping of the display or storage area shall not be required. Vehicle storage or display areas shall not be located in a manner that interferes with vehicle or pedestrian access aisles or driveways. Vehicle display areas shall adhere to off-street parking landscape regulations in Section 7.2.5.B.2
9. Tractor trailers, cargo trucks, busses, and other large commercial vehicles, or heavy equipment parking and storage shall comply with parking access, location, and design requirements, except for stall size and aisle size, which shall be as appropriate for the vehicles to be stored, and shall be designated on a site plan.
10. For dwelling single family detached and dwelling two family residences, the width of front yard parking areas shall be limited to 50 percent of the total lot width. Such parking areas must be paved with appropriate materials according to the provisions in Section 7.2.5.B below.

B. MARKING AND SURFACING

1. **Parking Space Marking:** The individual parking spaces in a lot shall be delineated in all parking lots except those utilizing road bond, gravel, grass, or other vegetative surfacing. Parking lots utilizing road bond, gravel, grass, or other vegetative surface shall delineate

parking spaces with a wheel stop. Overflow parking areas which provide parking spaces greater than the minimum required shall be exempt from the marking requirements.

2. **Surfacing:** Off-street parking areas shall be properly graded and located on improved lots or within parking structures. The material for surface parking spaces and corresponding access drives required by this section shall consist of suitable surfacing materials as set forth in the following table:

Material[1]	Non-Industrial Districts	Industrial Districts	Overflow Parking (for occasional or recreational use)	Accessible Spaces and Paths	Parking Areas Beyond Maximum Standard
Asphalt	●	●	●	●	
Concrete	●	●	●	●	
Compacted Stone (road bond)		●	●		
Gravel[2]		●	●		
Turf/Grass[3]			●		●
Porous Asphalt	●	●	●	●	●
Porous Paving Blocks	●	●	●		●
Other Pervious Materials[4]	●	●	●	●	●

1. *Additional paving materials may be used where appropriate as determined by the Administrator.*
2. *When gravel is used it must be maintained on site with a concrete apron at the traveled way of at least 25 feet in length measured from the property line.*
3. *Turf/grass parking areas must be properly graded and designed as determined by the Administrator to accommodate vehicular parking.*
4. *Other pervious materials may be used where appropriate as determined by the Administrator.*

C. CONNECTIVITY

1. Adjoining parking lots serving (or potentially serving) non-residential buildings shall be interconnected as follows:

   a. At least 1 connection is provided at all lot lines that are coincident for at least 60 feet with another lot zoned for non-residential use.

   b. The connection is at least 20 feet in width.

   c. If applicable, the connection aligns with a connection that has been previously constructed or designed on an adjacent property.

   d. The connection has a slope of no greater than 15 percent.

   e. The connection is not placed where a building on an adjacent property is within 50 feet of the lot line which would hamper traffic movements within the parking lot.

   f. The connection is placed in an area which will not require the removal of significant natural features such as wetlands or trees with a caliper of 6 inches or more.

   g. In the event these conditions cannot be met without undue hardship, or if such connections would create undesirable traffic flow, the Administrator may waive or adjust the connection requirement.

2. Where a parking lot connection is required, an easement for ingress and egress to adjacent lots shall be recorded by the property owner with the Lancaster County Register of Deeds.

D. STRUCTURED PARKING

1. **Screening Required:** Where an above-ground parking structure fronts a public street, the ground level shall be screened in such a way that cars are not visible from the street (e.g., structure should be wrapped by retail, office, or some other active use along the primary facade).
2. **Materials:** Along pedestrian-oriented streets, parking structure facades shall be treated with high-quality materials and given vertical articulation and emphasis compatible with the principle structure. The facade shall be designed to visually screen cars.
3. **Entries:** Pedestrian entries shall be clearly visible.
4. **Bicycle Parking:** Parking structures shall provide bicycle parking within the structure. It shall be located on the level closest to the street and/or a primary building entrance.

E. PEDESTRIAN CORRIDORS IN PARKING LOTS

Parking lots shall be designed to separate pedestrian travel from vehicles and include protecting pedestrian walkways within parking areas that lead to business/office/store entrances. For lots of 36 spaces or greater, sidewalk corridors shall be provided within the parking area and/or along the perimeter to provide safe building access for pedestrians.

1. Perimeter sidewalks and interior parking lot pedestrian corridors may be utilized to provide the required pedestrian access.
2. Pedestrian pathways (if provided) must be a minimum 5 feet in width.
3. Where parking is located between a public entrance and the fronting sidewalk, a pedestrian pathway must be provided following the shortest practical route across the parking lot between at least one such entrance on each side of the building facing a street.
4. Pedestrian pathways must be clearly delineated. This may be accomplished with the use of paving materials that differ from that of vehicular areas, striping, or other similar methods.

Suggested options for pedestrian access in parking lots.

F. PARKING, STORAGE, AND USE OF CERTAIN VEHICLES

1. Open storage of automobiles, trucks or trailers of any type without current license plates shall be prohibited on any parcel.
2. The parking or storage of tractor trailer rigs and/or cabs is not permitted in any residential district except for the AR District.

7.2.6 BICYCLE PARKING

A. REQUIRED SPACES

The following minimum bicycle parking spaces are required (Excludes RUB, LI, HI, and M Districts):

Use	Required Short-Term Spaces	Required Long-Term Spaces
Dwelling, Multi-Family	1 per 20 units, 3 minimum	1 per 5 units (Projects with 10+ units only)
All Other Residential Uses	None Required	None Required
All Retail Uses	1 per 5,000 SF of gross floor area, 3 minimum	1 per 5,000 SF of gross floor area
All Commercial Uses	1 per 10,000 SF of gross floor area, 3 minimum	1 per 5,000 SF of gross floor area
All Civic Uses	1 per 5,000 SF of gross floor area, 3 minimum	None Required

B. BICYCLE PARKING FACILITIES

Bicycle parking may be provided through various types of facilities, provided the facility meets the following:

1. Each required bicycle parking space is at least 2 feet by 6 feet;
2. Bicycle racks are securely anchored, are easily usable with both U-locks and cable locks, and support a bicycle at two points of contact to prevent damage to the bicycle wheels and frame;
3. Where a bike can be locked on both sides without conflict, each side can be counted as a required space;
4. Spacing of the racks provide clear and maneuverable access; and
5. Facilities may be placed on private property or within the public right-of-way. Facilities in the right-of-way must be approved by the Administrator.

C. SHORT TERM BICYCLE PARKING

Bicycle racks must be publicly accessible and be located no more than 100 feet from the building entrance the bicycle rack is intended to serve.

D. LONG-TERM BICYCLE PARKING

1. Long-term bicycle parking must be covered and weather resistant.
2. Required spaces can be in the form of a covered bicycle rack, in a locker, within a building, or within a parking structure.

7.2.7 DRIVEWAY ACCESS

A. DRIVEWAY STANDARDS

Any business or industry which utilizes lowered or cutaway curbs for purposes of ingress or egress shall be subject to the following provisions:

1. **Driveway Number and Location**

   a. No more than 2 combined entrances and exits shall be allowed on any parcel of property, the frontage of which is less than 200 feet on any one street. All entrances shall be located at a point along the frontage where it is possible for drivers of vehicles entering the highway to see in both directions along the traveled way far enough to allow entering the highway without creating a hazardous situation. Additional entrances or exits for parcels of property having a frontage in excess of 200 feet may be permitted by the Technical Review Committee (TRC) after showing of actual requirements of convenience and necessity. Where frontage is 50 feet or less, only one combined entrance/exit shall be permitted.

   b. At street intersections, no curb cut shall be located within 25 feet of the intersection of two curb lines or such lines extended, or within 15 feet of the intersection of two property lines, right-of-way lines, or such lines extended, whichever is least restrictive.

   c. The distance between any two curb cuts on the same side of the street shall be not less than 15 feet. Said distance shall be measured between the points of tangency of the curb return radii and the established curb line of the abutting street.

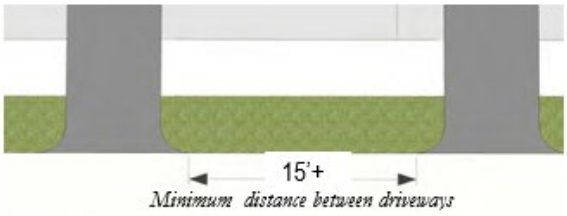

   d. All driveways shall be constructed so as to be at least 5 feet from any property line, except that a curb return may become tangent to a curb line at a point where said property line extended intersects said curb line. If a Joint Driveway is approved, this standard does not apply to a Joint Driveway that is parallel to a property line.

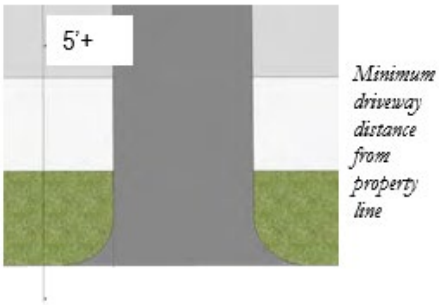

2. **Driveway Width**

   The width, in feet, of a driveway approach shall be within the minimum and maximum limits specified by Appendix C, MSSD.

3. **Joint-Use Driveway**

   a. Wherever feasible, the Administrator shall require the establishment of a joint-use driveway serving two abutting properties.

   b. When a property is developed before an abutting property is developed, the site shall be designed to ensure that its driveway and circulation may be modified to create a joint-use driveway and interconnected parking with the abutting property at a later date.

4. **Driveway Connection Policy**: Any person or corporation desiring to construct a driveway or other connection to any right-of-way shall comply with requirements as established and maintained by Lancaster County Public Works Department.

5. **Driveway Sight Visibility Triangles**: At all driveway approaches, a sight area shall be maintained according to the provisions of Appendix C, MSSD.

7.3 LIGHTING

7.3.1 PURPOSE AND APPLICABILITY

The standards set forth in this section are designed to achieve several purposes. It is the intent of this section to:

- Minimize light pollution, glare, and light trespass.
- Conserve energy and resources while maintaining night-time safety and utility.
- Curtail the degradation of the night-time visual environment.

7.3.2 GENERAL DESIGN REQUIREMENTS

A. DISTRICT LIGHTING STANDARDS IN FOOTCANDLES (FC)

	AR, RN, RR, LDR, MDR, HDR, MH	UR, RMX	PB, NB, INS	GB, RB, LI, HI, M , IMX
Light Trespass Off Property[1]	1	1	1	1
Maximum On-Site Lighting[2]	n/a	10	10	10
Outside Sales Areas[3]	n/a	10	20	20

1. This requirement shall only apply to light trespass from non-residential properties onto residential properties and shall be measured as the maximum point of illuminance at the property line.
2. This shall be measured as the maximum point of illuminance on the property.
3. This shall be measured as the average point of horizontal illuminance, provided that in all districts the maximum uniformity ratio shall be 4:1 minimum to average.

B. CONTROL OF GLARE – LUMINAIRE DESIGN FACTORS

1. Other than floodlights, flood lamps, and spotlights all outdoor lighting fixtures of more than 1,000 lumens shall be full-cutoff type fixtures. Any fixture that is not full-cutoff shall be a directional fixture (such as floodlights) and may be used provided they shall be aimed and fully shielded.
2. The mounting height of all outdoor lighting, except outdoor sports field lighting and outdoor performance area lighting, shall not exceed 30 feet above finished grade.
3. Non-cutoff decorative post-mounted fixtures equipped with a solid top and mounted 16 feet or less above ground and other non-cutoff dusk to dawn utility type fixtures mounted 25 feet or less may be used.
4. All metal halide, mercury vapor, fluorescent, and other white-colored light source lamps used in non-cutoff fixtures (excluding floodlights) shall be coated with an internal white frosting inside the outer lamp envelope.
5. All metal halide fixtures equipped with a medium base socket must utilize either an internal refractive lens or a wide-body refractive globe so that light rays emitted by the light fixture are projected below the horizontal plane passing through the lowest point on the fixture from which light is emitted.

7.3.3 ADDITIONAL REQUIREMENTS FOR SPECIFIC USES AND AREAS

A. OUTDOOR DISPLAY AREAS

All light fixtures shall meet the Illuminating Engineering Society of North America (IESNA) definition of full-cutoff fixtures. Forward throw fixtures (type IV light distribution, as defined by

the IESNA) are required within 25 feet of any public street right-of-way. Alternatively, directional fixtures (such as floodlights) may be used provided they shall be aimed and fully shielded.

B. LIGHTING FOR VEHICULAR CANOPIES

Lighting under vehicular canopies shall be designed so as not to create glare off-site. Acceptable methods include one or more of the following:

1. Recessed fixture incorporating a lens cover that is either recessed or flush with the bottom surface of the vehicular canopy.
2. Surface mounted fixture incorporating a flat lens that provides a cutoff or shielded light distribution.
3. Other method approved by the Administrator.

C. SECURITY LIGHTING

1. Motion activated security lights or unshielded flood and spotlights, with 45 watts or less, installed for security and activated by motion sensor, are permitted. These unshielded lights must be mounted and aimed in a manner that minimizes up-lighting and light trespass.
2. All floodlights shall be installed such that the fixture shall be aimed down at least 45 degrees from vertical floodlights and shall be positioned such that any such fixture located within 50 feet of a street right-of-way is mounted and aimed perpendicular to the right-of-way, with a side-to-side horizontal aiming tolerance not to exceed 15 degrees from perpendicular to the right-of-way.

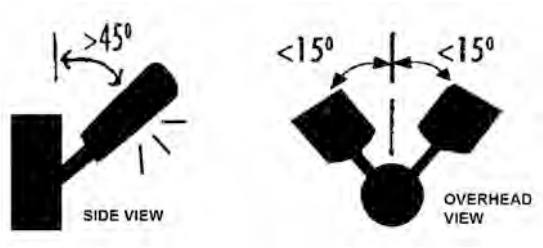

3. All flood or spot lamps emitting 1,000 or more lumens shall be aimed at least 60 degrees down from horizontal or shielded such that the main beam from the light source is not visible from adjacent properties or the street right-of-way.
4. Landscape and decorative lighting using incandescent lighting of 40 watts or less is permitted, provided that the light is installed and aimed to prevent lighting build up and light trespass and shielded to prevent view from the public right-of-way.
5. Area "dusk to dawn" open-bottom lights, with photosensors that automatically turn the light on and off at certain levels of ambient illumination, are permitted. These lights must be full-cutoff.

D. OUTDOOR RECREATIONAL LIGHTING

1. Lights shall be shielded and positioned so as not to shine onto adjacent properties.
2. All fixtures used for event lighting shall be fully shielded or be designed or provided with Manufacturer's Glare Control Package, so as to minimize up-light, spill-light, and glare.
3. Fixtures for outdoor recreational facilities must not exceed 80 feet in mounting height (this includes bases and/or other mounting structures) above finished grade.

4. Fixtures shall be designed and aimed so that their beams fall within the primary playing area and the immediate surroundings, so that off-site direct illumination is significantly restricted (spillover levels at the property line must not exceed 2 footcandles).

E. BUILDING FACADE LIGHTING

Floodlights, spotlights, or any other similar lighting shall not be used to illuminate buildings or other site features unless approved as an integral architectural element on the development plan. On-site lighting may be used to accent architectural elements, but not used to illuminate entire portions of building(s) or sign(s). Where accent lighting is used, the maximum illumination on any vertical surface or angular roof surface shall not exceed 5.0 average maintained footcandles. Building facade and accent lighting will not be approved unless the light fixtures are carefully selected, located, aimed, and shielded so that light is directed only onto the building facade and spillover light is minimized.

7.3.4 EXEMPTIONS AND PROHIBITIONS

A. EXEMPTIONS

1. All temporary emergency lighting needed by the Sheriff or Fire Departments or other emergency services, as well as all vehicular luminaires, shall be exempt from the requirements of this ordinance.
2. All hazard warning luminaires required by Federal regulatory agencies are exempt from the requirements of this article, except that all luminaires used must be red and must be shown to be as close as possible to the federally required minimum lumen output requirement for the specific task.
3. Individual residential lighting that is not part of a site plan or subdivision plat for street or other common or public area outdoor lighting.
4. Lighting associated with landscape/holiday/festive/temporary uses.
5. Lighting of public art that has been permitted or otherwise approved by Lancaster County.
6. Other Municipal or State lighting installed for the benefit of public health, safety, and welfare.
7. All fixtures installed or temporarily used by public agencies, their agents, or contractors for the purpose of illuminating public streets.
8. Lighting of US Flags provided the flag standard does not exceed the maximum permitted building height for that district.

B. PROHIBITIONS

1. **Laser Source Light:** The use of laser source light or any similar high intensity light for outdoor advertising or entertainment is prohibited.
2. **Searchlights:** The operation of searchlights for advertising purposes is prohibited.
3. **Flashing Lights:** Lights that flash, move, revolve, rotate, scintillate, blink, flicker, vary in intensity or color, or use intermittent electrical pulsation are prohibited.
4. **Awning and Canopy Lighting:** Awnings and canopies used for building accents over doors, windows, and etc. shall not be internally lit (i.e. from underneath or behind) so as to visually turn a translucent material into an internally illuminated material. Lighting may be installed under canopies that light the sidewalk, or downlights onto the architectural features of a building.

7.3.5 ADMINISTRATION

A. LIGHT MEASUREMENT TECHNIQUE

Light level measurements shall be made at the property line of the property upon which the light to be measured is being generated. If measurement on private property is not possible or practical, light level measurements may be made at the boundary of the public street right-of-way that adjoins the property of the complainant or at any other location on the property of the complainant. Measurements shall be made at finished grade (ground level), with the light-registering portion of the meter held parallel to the ground pointing up. The meter shall have cosine and color correction and have an accuracy tolerance of no greater than plus or minus 5 percent. Measurements shall be taken with a light meter that has been calibrated within the year. Light levels are specified, calculated, and measured in footcandles (FC).

B. COMPLIANCE

While not required to be provided with the submission of the site plan, projects may be required to provide the following information upon request by the Administrator:

1. Point-by-point footcandle arrays in a printout format indicating the location and aiming of illuminating devices. The printout shall indicate compliance with the maximum maintained footcandles required by this ordinance.
2. Description of the illuminating devices, fixtures, lamps, supports, reflectors, poles, raised foundations, and other devices (including but not limited to manufacturers or electric utility catalog specification sheets and/or drawings, and photometric report indicating fixture classification [cutoff fixture, wall pack, floodlight, etc.]).
3. If the Administrator does not request lighting information to be included for review with a site plan, this shall not relieve the applicant from compliance with the standards.

C. NONCONFORMING LIGHTING

Any nonconforming lighting fixture lawfully in place or approved by the County prior to the adoption of this ordinance shall be exempt from these requirements. Routine maintenance, including changing the lamp, ballast, starter, photo control, lens, and other required components, is permitted for all existing fixtures. At the time that a nonconforming fixture, which was installed prior to the adoption of this ordinance, is replaced, moved, upgraded, or otherwise changed, the fixture must be replaced by either:

1. The same type of fixture that emits an equal or less amount of lumens as the original fixture, allows the trespassing of an equal or less amount of light onto neighboring properties, and restricts uplighting to an equal or less amount than the original fixture; or
2. A fixture that is in compliance with this ordinance.

7.4 SIGNS

7.4.1 GENERAL PURPOSE AND INTENT

The sign regulations of this section are adopted under the zoning authority of the County in furtherance of the general purposes set forth in the Unified Development Ordinance. The purpose of this chapter is as follows:

- To encourage the effective use of signs as a means of communications in the unincorporated areas of Lancaster County;
- To maintain and enhance the aesthetic environment and the County's ability to attract sources of economic development and growth;

- To improve pedestrian and traffic safety;
- To minimize the possible adverse effect of signs on nearby public and private property; and
- To enable the fair and consistent enforcement of these sign regulations.

7.4.2 APPLICABILITY

A. UDO ZONING PERMIT REQUIRED

Unless otherwise provided by this ordinance, no sign may be constructed, erected, placed, moved, enlarged, illuminated, or substantially altered within the County unless and until a UDO Zoning Permit has been obtained and the provisions of this section have been met. Additional permits may be necessary pursuant to the regulations in the state building code or other sections of this ordinance. No Zoning Permit shall be issued until a completed application, accompanied by the appropriate fee from the "Official Fee and Charge Schedule" for Lancaster County, has been filed with, reviewed, and approved by the Administrator.

B. ALTERATION OF SIGN FACE

Repainting of a sign, if in conformance with the applicable standards of this chapter, shall be considered maintenance or repair and shall not require a permit. The changing of tenant name panels on multiple-tenant development signage shall not require a permit.

C. HISTORIC SIGNS

The restoration and preservation of signs over 50 years old shall not require a Zoning Permit; however such signs may not be enlarged, moved, illuminated, or otherwise altered except in conformance with an approved Zoning Permit and the provisions of this section.

7.4.3 COMPUTATION OF SIGNAGE MEASUREMENTS

A. COMPUTATION OF SIGN AREA

1. The area of a sign face shall be deemed to be the entire area within the smallest square or rectangle that will encompass the extreme limits of the writing, representation, emblem, or other display on the sign as illustrated at right.
2. The area shall also include any material or color forming an integral part of the background of the display or used to differentiate the sign from the backdrop or structure against which it is placed.

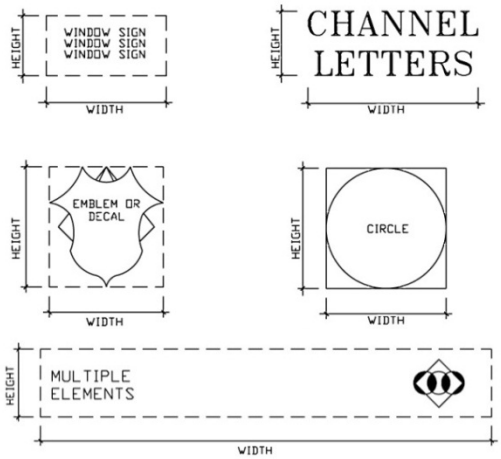

3. Frames or structural members not bearing informational or representational matter shall not be included in computation of the area of a sign face.

4. All sides of a multi-sided sign shall be included in the computation of area, except that the total area of a two-sided back-to-back sign shall only be calculated as the area of one of the sides as illustrated at right.

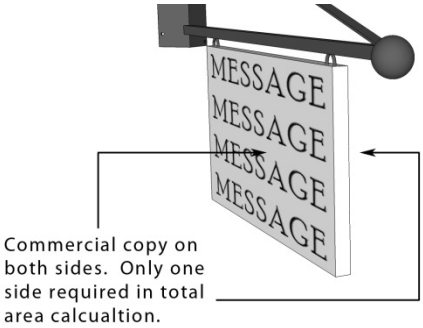

B. COMPUTATION OF HEIGHT

The height of a sign shall be computed as the distance from the base of the sign at normal grade to the top of the highest attached component of the sign. Normal grade shall be the higher of the established grade after any construction (exclusive of any filling, berming, mounding, or excavating solely for the purpose of locating the sign), or the elevation of the nearest point of the crown of the nearest abutting street.

C. COMPUTATION OF SETBACK

Unless specifically stated otherwise, setbacks are measured from the nearest point on the sign to the nearest point on a property line, zoning boundary, use, or structure, as appropriate.

7.4.4 GENERAL PROVISIONS

A. STANDARDS APPLICABLE TO ALL PERMITTED SIGNS

1. **Location**: Unless specifically provided otherwise elsewhere in this section, all permitted signs shall adhere to the following provisions:

   a. All signs regulated by this ordinance shall be on-premises signs located on private property.

   b. Permitted signs shall always be located outside of the street right-of-way and required sight triangles.

   c. Permitted signage shall be located behind sidewalk areas except where encroachments are permitted.

   d. No new freestanding sign shall be placed within 20 feet of an existing freestanding sign on an adjoining lot.

2. **Sign Encroachments:** Where awning signs, projecting/suspended signs, and marquee signs are permitted, they may project over the sidewalk to within 18 inches of the curbline provided that such signs shall maintain a minimum clearance of 8 feet above the sidewalk.

3. **Removal of Dated Signs:** Any sign face or message relating to a business or other use located on the same lot shall be removed by the owner within 30 days after vacating the premises of this particular business.

4. **Noncommercial Messages:** Any sign, display, or device allowed under this chapter may contain, in lieu of any other copy, any otherwise lawful noncommercial message.

7.4.5 SIGNAGE STANDARDS BY CATEGORY

Signage shall be permitted subject to the standards in the tables below. Additional standards for specific signage types are outlined in Section 7.4.5.C.

A. ATTACHED SIGN STANDARDS

	Permitted Location	Maximum Area	Maximum Height	Other Requirements	Maximum Number
A. Wall Signs	AR, RR, RN, LDR, MDR, HDR, UR, RUB, PB, HDR (non-residential uses only, but not Home Occupations)	30 sq ft OR 1 sq ft per linear ft of building wall, whichever is greater. 50 sq ft building maximum	No sign shall extend above the roofline	12 inch maximum protrusion	None. May not exceed maximum calculated square footage on any wall (cannot move allotment from one wall to another)
	NB, INS, RMX, MX, IMX	30 sq ft OR 1 sq ft per linear ft of building wall, whichever is greater. 50 sq ft building maximum.			
	LI, HI, GB, RB	50 sq ft OR 1sq ft per linear ft of building wall, whichever is greater. 75 sq ft building maximum.			
B. Window Signs	All businesses, except Home Occupations, with at least 30 linear feet of windows fronting on a public right-of-way	50% of the gross glass area on any one side of the first floor of a building	n/a	Signs shall not be illuminated except for neon lettering on window signs	n/a
C. Awning Signs	All businesses, except Home Occupations, on first floor awnings only	50% of the awning area	n/a	Signs shall not be illuminated	1 per public entrance
D. Theatre Marquee Signs	Theatres only	100 sq ft	May not exceed the maximum height for the zoning district	Such signs must be perpendicular to the facade of the building, or at a 45 degree angle from the corner of the building	1 per theatre
E. Projecting / Suspended Signs	All businesses except Home Occupations	4 sq ft per side	No sign shall extend above roofline	All lettering and graphics shall be permanent	1 per public entrance
F. Address / Tenant Identification Signs	All Districts	6 sq ft per tenant	n/a	Signs on mailboxes and newspaper tubes may be located in the right-of-way as per applicable postal regulations Street numbers (only) may be painted on the curb	1 per public entrance

B. FREESTANDING SIGN STANDARDS

	Permitted Location	Maximum Area	Maximum Height	Other Requirements	Maximum Number
A. Monument / Ground Signs	AR, RR, RN, LDR, MDR, HDR, UR, PB (non-residential uses only, but not Home Occupations)	25 sq ft per sign	6 ft	5 ft minimum front setback and 10 ft minimum side setback. No sign shall be located in any required buffer yard or within 20 ft of any right-of-way intersection. Signs shall have a base at least 50% wider than the overall width of the sign OR include landscape plantings at the base of the sign. Additional standards and allowances apply for multi-tenant commercial developments according to the provisions of Chapter 5.	1 per street frontage
	NB, INS, RMX, MX, IMX,	40 sq ft per sign	10 ft		
	INS	40 sq ft for the first sign. One additional sign per street front of 30 sq ft	10 ft for first sign, 6 ft for additional signs		1 per 300 ft of development lot frontage
	LI, HI, GB, RB	40 sq ft OR 0.25 sq ft per linear foot of lot frontage on streets up to 100 sq ft total	10 ft		1 per street frontage
B. Bracket Signs	Business and Home Occupations in all districts except IMX	4 sq ft per side	4.5 ft	5 ft minimum front setback and 10 ft minimum side setback No sign shall be located in any required buffer yard or within 20 ft of any right-of-way intersection.	1 per public entrance
C. Portable / A-Frame Signs	NB, PB, RMX, MX	8 sq ft per side, no more than two sides	4.5 ft	Signs may be located on a public sidewalk, but must maintain at least 48 inches of unobstructed pedestrian space. Signs must be placed within 20 ft of the main entrance. The sign must be removed at the close of business each day. Illumination of signs is prohibited.	1 per public entrance

C. PERMITTED SIGNAGE TYPES – ATTACHED SIGNS

A. Wall Signs: Flat signs, channel lettering, or three-dimensional signs which are painted or attached (parallel) to the wall of a building or structure.		
B. Window Signs: Flat signs or lettering which are painted, hung, or otherwise affixed over or behind the window of a building or structure.	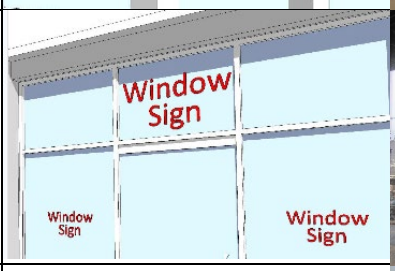	
C. Awning Signs: Signs integrated into traditional storefront awnings that project over a sidewalk from the building facade.	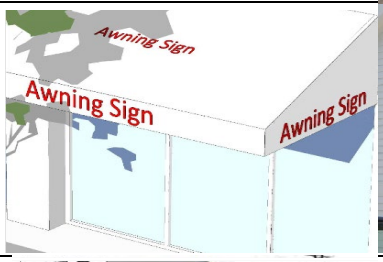	
D. Theatre Marquee Signs: Three-dimensional signs projecting from the side of a building which may extend above the roofline and/or incorporate changeable type.		
E. Projecting/ Suspended Signs: Pedestrian-scaled signs mounted to the side of the building or underside of a balcony or arcade which can be read from both sides.	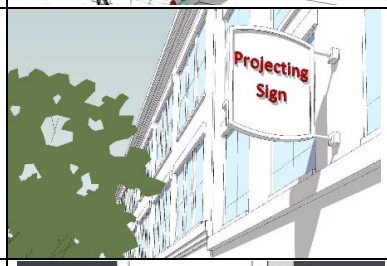	
F. Address/Tenant Identification Signs: Incidental signs that list tenants, unit numbers, address contact information, hours of operation, and similar non-commercial characteristics in a multi-tenant building with common entry.		

D. PERMITTED SIGNAGE TYPES – FREESTANDING SIGNS

A. Monument / Ground Signs: Signs erected independent of a building, with an integral support structure.		
B. Bracket Signs: Minor or secondary signs which are used to identify the address of a building, or to identify the profession, family, organization, business, etc., occupying the building.	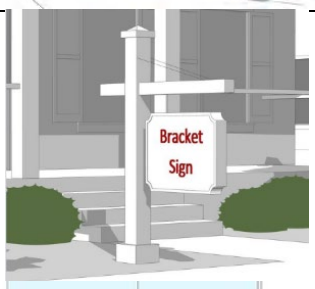	
C. Portable/ A-Frame Signs: Pedestrian scaled non-permanent signs which are used to display menus, daily specials, sale announcements, and similar messages.		

Source: City of Wilson, NC

7.4.6 OTHER PERMITTED SIGNAGE STANDARDS

The following sign types shall be permitted subject to the additional standards below and shall require a UDO Zoning Permit as outlined in Chapter 9.

A. DRIVE-THRU MENU BOARDS

1. **Location/Placement:** Such signs shall be allowed only as an accessory use to a restaurant having a drive-through window.
2. **Maximum Number:** 2 menu boards per lot shall be permitted.
3. **Surface Area:** 35 square feet maximum per sign.
4. **Height:** 8 feet maximum.

B. GAS PUMP ISLAND CANOPY SIGNS

1. **Location/ Placement**
   a. Such signs shall be allowed only as a part of an approved Vehicle Services - Minor Maintenance/Repair (Gas Station) use.
   b. Such signs shall be attached to the outer, vertical surface of the gas pump island canopy roof and shall project not more than 18 inches from said vertical surface.
   c. No signs shall hang from, or under, the canopy; no signs shall be placed on the top, horizontal roof surface of the canopy; and no signs shall extend beyond the top, bottom, and side edges of any canopy surface.

2. **Surface Area:** Such signs shall cover no more than 50 percent of the lateral surface area of any given vertical surface.

3. **Height:** The maximum letter or insignia/logo height shall be 24 inches.

C. CHANGEABLE SIGNS

1. **Manually-Activated Changeable Signs:** Any permitted sign may be a manually-activated changeable sign.

2. **Electrically-Activated Changeable Signs (On-Premises):** Any permitted sign in the GB, RB, LI, and HI districts, or on any property with 500 feet or more of frontage on a street with at least 2 travel lanes in each direction, may be, or include as part thereof, an electrically-activated changeable sign not to exceed 20 square feet in area, provided that the size of the sign may not exceed the area originally allotted.

3. Permitted signs in the NB, RMX, MX, and INS Districts may be, or include as part thereof, only time and weather informational signs as electrically-activated changeable signs. Time and weather messaging restrictions shall not apply to schools, colleges and universities, public safety stations, worship centers, public recreation facilities, and hospital uses. (Ord. No. 2019-1609, 10.14.19)

4. In multi-tenant commercial developments of 40 or more acres, up to 200 square feet or 50 percent, whichever is less, of any allotted freestanding sign may be an electrically-activated changeable sign.

D. TEMPORARY COMMERCIAL SIGNS

Unless specified elsewhere in this chapter, temporary signage shall be permitted for all non-residential uses, except Home Occupations, subject to the following standards:

1. **Maximum Number:** 1 per street frontage per business.

2. **Surface Area:** 16 square feet maximum per sign.

3. **Standards for Businesses Under Construction:** Temporary signs announcing the opening of a business shall be permitted subject to the following:

   a. Only 1 such sign shall be allowed per business.

   b. Such sign(s) shall not exceed 16 square feet in area or 6 feet in height.

   c. Such signs shall only be placed on the lot the announced business will occupy.

   d. Such signs shall be permitted only during that time that a valid building permit is in effect for the announced business.

   e. Such sign(s) shall be removed upon the construction of any otherwise authorized freestanding sign on the lot or when the announced business opens for business, whichever comes first.

E. MULTI-TENANT COMMERCIAL DEVELOPMENTS

1. **Signage Standards:** Multi-tenant commercial developments of 8 acres or more or with 500 or more feet of street frontage shall be entitled to the following additional signage:

	Number of Signs Permitted	Maximum Height	Maximum Area Per Development	Maximum Sign Area per Street Frontage	Additional Requirements
Entire development signage	2 signs for each adjacent street frontage	20 ft - RB District 10 ft – all other districts	The greater of 70 sq ft OR 0.25 sq ft per development frontage on streets	135 sq ft - RB District 120 sq ft – all other districts	Signs must be placed a minimum of 500 ft apart
Individually platted lots within the development	1 sign for each adjacent street frontage	8 ft	n/a	40 sq ft.	n/a

2. **Entrance/Directional Signs:** Additional entrance/directional signs for multi-tenant commercial developments of 40 or more acres are permitted subject to the following provisions:

   a. Up to 2 such signs are permitted for each driveway entrance. Such signs must be placed within 50 feet of the driveway from which the allocation is drawn, but outside any sight visibility triangle as outlined in Section 9.7.1.E.

   b. Maximum height is 10 feet.

   c. The maximum area of any one sign is 40 square feet.

F. OFF-PREMISES ADVERTISING SIGNS (BILLBOARDS)

Unless otherwise specified in this chapter, off-premises advertising signs shall be allowed in the LI and HI Districts only subject to the following standards:

1. **Signage Standards**

Districts	Maximum Total Height	Display Surface Dimensions	Maximum Area
LI, HI	24 ft	Maximum height – 10 ft Maximum width – 15 ft	150 sq ft per side, including copy extensions

2. **Additional Standards**

   Outdoor advertising signs (billboards) shall be located only in the I-1 and I-2 Districts.

   a. No billboard shall have more than two sign surface areas mounted back to back and each face shall be the same height and width;

   b. No more than one billboard shall be allowed on a lot;

   c. No billboard shall be erected upon the roof of any building, attached to any building or painted or posted on any building;

d. No billboard shall be set back less than the height of the sign from any public/private right-of-way or easement. No billboard shall exceed 24 feet in height at its highest point.

e. No billboard shall be less than 1,500 feet from any other billboard located on the same side of the same public/private right-of-way, public or private easement;

f. At street intersections, no billboard shall be located less than 500 feet from any other billboard sign.

g. No billboard shall be located within 200 feet of any right-of-way of any underpass, overpass, bridge, tunnel or any plaza serving such facility;

h. No billboard shall be located less than 500 feet from any residential district and/or use;

i. The maximum sign surface area allowed for such a sign shall be 150 square feet;

j. Such signs shall only be allowed on parcels which contain at least 150 feet of road frontage.

k. Such signs shall be permitted on premises where other businesses or permitted uses are established provided such signs are located at least 75 feet from any part of the property occupied by any portion of the established use including off-street parking areas.

l. Signs subject to regulation under SCDOT outdoor advertising control may require a permit from the South Carolina Department of Transportation in addition to any permit required under this ordinance.

3. Commercial Electronic Variable Message Signs (CEVMS)

a. Messages on a CEVMS shall remain fixed for a period of at least ten (10) seconds between changes. The change sequence must be accomplished within an interval of two (2) seconds or less.

b. A CEVMS shall not include animated, continuous, moving, rolling, scrolling messages, no fluttering, blinking, of flashing elements or video displays.

c. A CEVMS shall have an automatic dimmer and a photo cell sensor to adjust the illumination intensity, or brilliance of the sign so that it shall not cause glare or impair the vision of motorists, and shall not interfere with any driver's operation of a motor vehicle. The CEVMS should not exceed a maximum illumination of seven thousand five hundred (7,500) nits (candelas per square meter) during daylight hours and a maximum illumination of five hundred (500) nits between dusk to dawn as measured from the sign's face at maximum brightness. Any external illumination devices shall be effectively shielded so as to prevent beams or rays of light from being directed at any portion of a street or highway, or any residential use.

4. Location/ Placement

a. Signs must be at least 300 feet from any MH, LDR, MDR, HDR, or UR (as outlined in Section 2.4).

b. All portions of a sign must be at least 10 feet from any overhead electric wiring and public utility guy wire.

c. Signs must be at least 1,500 feet from any other off-premises advertising sign, measured from centerpoint to centerpoint.

5. General Standards

a. "Copy extensions" (portions of copy extending beyond the outer edge of the sign frame) are allowed provided they extend no more than 6 feet beyond the outer edge of the sign frame, they do not exceed 100 square feet in area (per side), and they comply with all other requirements.

b. Double-faced back-to-back signs are allowed.

c. Signs shall not be attached to any building and must meet the principal building setback requirements for the district in which they are located.

d. Signs shall meet wind load requirements that meet or exceed the most recently approved International Building Code (IBC).

e. The area within 25 feet, in all directions, from the base of the sign shall be landscaped with ground cover, shrubs, etc., so as to screen the base of the sign. The sign owner shall maintain this landscaping as long as the sign occupies the premises and shall keep this area free from debris and undergrowth.

f. A site plan/landscaping plan shall be prepared by a registered engineer or architect for each sign. The landscape plan must be approved by the Administrator.

g. Color lighting is prohibited on all signs except permitted electrically-activated changeable signs.

6. **Off-Premises Signage with Changeable Copy:** Off-premises signage which incorporate electrically-activated or other changeable copy must be at least 2,000 feet from any other off-premise advertising sign, measured from centerpoint to centerpoint.

7. **Standards for Existing Signs:** When the property upon which such sign is erected is changed to a district that does not permit such signs, the sign shall be removed within 90 days of such zoning change.

G. RESIDENTIAL DEVELOPMENT ENTRY SIGNAGE

Each subdivision or multi-family development is permitted one of the following options for entry signage at each major entrance to the subdivision or development:

1. **Option 1:** A maximum of 2 permanent monument signs located on private property or on the walls of a building with a maximum size of 32 square feet for each sign and a maximum height of 6 feet; OR

2. **Option 2:** One monument sign located in the median of any divided entrance with a maximum height of 6 feet and a maximum size of 32 square feet and subject to the following additional provisions:

   a. The sign shall be set back 25 feet from the right-of-way of the intersecting street;

   b. Any lighting fixtures shall be attached to or incorporated in the sign in such a fashion so as not to constitute a safety hazard or mowing obstruction;

   c. Detailed drawings of the sign and its location must be approved by the Administrator prior to construction of the sign;

   d. The sign shall be maintained by the developer and the County shall not be responsible for any special landscaping on the median.

7.4.7 SIGNS NOT REQUIRING A PERMIT

The following signs shall not require a UDO Zoning Permit, unless illuminated and a permit is required as per the electrical code, and shall not be counted against any allotments, but shall conform to all applicable requirements of this section.

A. WINDOW DISPLAYS

Merchandise, pictures or models of products, or services that are incorporated as an integral part of an interior window display.

B. PLAQUES OR HISTORICAL MARKERS

Memorial plaques, cornerstones, historical tablets, and similar devices.

C. ART & ARCHITECTURAL FEATURES

Integral decorative or architectural features of buildings or works of art, provided such features or works of art do not contain advertisements, trademarks, moving parts, or lights.

D. TEMPORARY HOLIDAY DECORATIONS

Displays, including lighting, erected in connection with the observance of holidays. Such displays shall not be considered as illuminated signs, and they shall be removed within 30 days following the holiday.

E. NONCOMMERCIAL SIGNS ON RESIDENTIAL LOTS

Any ground/freestanding sign containing any lawful noncommercial message on a single family or multifamily residential lot may be erected subject to the following:

1. Such signs shall not exceed 4 square feet in area, and 3 feet in height.
2. The number of these signs is limited to 1 per lot. However, a corner lot can have 2.
3. In no event shall there be more than 1 such sign allowed per lot.

F. POLITICAL SIGNS ON PUBLIC RIGHTS-OF-WAY

Political signs may be located within a street right-of-way, except fully controlled access highways, subject to the following provisions:

1. Permission must be granted from the property owner if sign is located outside the right-of-way.
2. Such signs may not exceed 6 square feet in area and 42 inches in height.
3. Such signs shall not be closer than 3 feet from the edge of pavement of the road.
4. Such signs shall not obscure motorist visibility at an intersection.
5. Such signs shall not obscure or replace any other sign.
6. In the event of a primary runoff election, political signs for the candidates involved may remain on display until 15 days after the runoff election.

G. SIGNS ON ATHLETIC FIELDS

Scoreboards and internally-oriented signs on athletic fields.

H. VENDING MACHINE, ATM, AND GASOLINE PUMP SIGNS

Signs attached to and made an integral part of a vending machine, automatic teller machine, or gasoline pump if advertising or giving information about the products or services dispensed or vended by that machine.

I. REAL ESTATE SIGNS

1. Individual Lots For Sale

a. Such signs may be no greater than 4 square feet in a residential area and 4 feet in height in a residential area and no greater than 16 square feet and 6 feet in height in a commercial area. (Ord. No. 2018-1492, 2.12.18)

b. One sign is permitted for each street front on each lot.

c. Real estate signs shall be removed within 15 days after the closing of the sale, rental, or lease of the property.

d. Such signs shall only be located on property for sale or lease.

2. On-Premises Subdivision Sales Signs

a. Such signs may be no greater than 16 square feet in area and 6 feet in height.

b. One sign is permitted for each entrance to the subdivision.

c. Such signs shall be removed when all of the lots have been sold or within 5 years of erection, whichever is less.

J. YARD SALE SIGNS

1. Temporary signs announcing a yard or garage sale not over 4 square feet in area. One sign for each street front on each lot.

2. Signs must be removed within 7 days to avoid penalties.

3. Signs cannot be placed on street signs or utility poles.

K. SPECIAL PUBLIC OR NON-PROFIT EVENT SIGNS

Signs may be erected by public or non-profit organizations such as schools, churches, and farmer's market associations for promoting special events as follows:

1. Signs for public events such as fund drives, fairs, festivals, sporting events, etc. may be displayed for a period of 15 days. Such signs shall be removed within 7 days of the end of the special event.

2. Signs are limited to 32 square feet in area, 6 feet in height, and 1 sign along each street frontage.

3. Off-premises signs shall be permitted on private property provided that they are located a minimum distance of 2,640 feet (or ½ mile) from any other off-premises sign advertising the same event.

L. CONSTRUCTION SIGNS

Temporary signs for construction on or development of a lot shall be permitted subject to the following:

1. Such signs shall only be allowed during the time such construction or development is actually in progress, and only when placed on the lot in question (and not on a public right-of-way).

2. One such sign shall be allowed per contractor and/or financial institution, and it shall not exceed 16 square feet in area.

3. Sign permits are required before installation.

M. FLAGS, ETC.

Flags or emblems of political, civic, philanthropic, educational, or religious organizations are permitted provided:

1. The height of any pole shall not exceed the maximum building height for the district;
2. Flags do not extend into the street; and
3. Flags are attached to a pole, rope, or building on only one side.
4. Feather flags are not allowed.

N. GOVERNMENTAL SIGNS

Any sign, symbol, or device erected and maintained by a federal, state, county, or municipal government, or any such governmental agency, in the performance of their duties such as regulatory signs, identification/directional signs, welcome signs, legal notice signs, and traffic control signs.

O. PRIVATE TRAFFIC CONTROL SIGNS

Traffic control signs erected on private property that conform with the design and installation requirements stipulated in the latest edition of the "Manual of Uniform Traffic Control Devices," as amended, and "Standard Highway Signs," as published and amended by the U.S. Department of Transportation, Federal Highway Administration.

P. PARKING LOT DIRECTORY SIGNS

Public parking lot directory signs are permitted in parking lots operated by a public agency or government subject to the following:

1. Only 1 such sign per parking lot.
2. Maximum sign area is 32 square feet.
3. May display advertising for businesses that directly abut the parking lot in which the sign is located only.

Q. DIRECTIONAL / IDENTIFICATION SIGNS

Such signs displayed strictly for the direction, safety, or convenience of the public, including signs which identify restrooms, parking area entrances or exits, freight entrances and similar devices, and warning, danger and no-trespassing signs. These signs may bear only names and/or addresses of the occupants of the premises and/or a logo of the business, or product sold, on the premises.

1. Maximum size is 6 square feet;
2. Maximum height of freestanding identification signs is 4 feet;
3. Freestanding identification signs are limited to the greater of 1 such sign per driveway or, 1 such sign per lot.

R. HAZARD IDENTIFICATION SIGNS

Hazard identification signs outlined in the National Fire Protection Association “NFPA 704”.

7.4.8 PROHIBITED SIGNS

The following signs shall be prohibited in all districts:

A. SIGNS ON ROADSIDE APPURTENANCES

Except as otherwise provided, no sign shall be erected, maintained, painted, or drawn on any tree, rock, natural feature, utility pole, overpass, traffic control device, street light, or other similar utility pole.

B. SIGNS MEANT TO BE READ IN SERIES

No sign shall be permitted which uses a series of 2 or more signs placed in a line parallel to a roadway, or in similar fashion, all carrying a single advertising message, part of which is contained on each sign.

C. SIGNS OBSTRUCTING ACCESS

No sign shall be erected or maintained so as to obstruct any fire escape, window, door, or other opening used as a required means of egress or so as to prevent free passage from one part of a roof to any other part thereof. No sign shall be attached in any form, shape, or manner to a fire escape, or placed in such a manner as to interfere with any opening required for ventilation.

D. SIGNS RESEMBLING TRAFFIC SIGNALS

No sign shall be erected which simulates an official traffic-control or warning sign in such a manner as to, or would in any way, confuse, or mislead traffic.

E. ANIMATED/FLASHING SIGNS

Except as otherwise provided, flashing signs, beacons, signs using intermittent or animated or effect, and revolving signs are prohibited.

F. ROOF SIGNS

Signs placed anywhere on a roof of a structure are prohibited.

G. PORTABLE SIGNS

Portable signs are prohibited.

H. OFF-PREMISE ADVERTISING

Off-premise advertising signs are prohibited.

I. SIGNS ON MOTOR VEHICLES

Signs placed anywhere on a motor vehicle or trailer, including digital and/or animated signs are prohibited.

J. OTHER

Any sign which is not listed as being permitted or which is structurally unsafe or hazardous.

7.4.9 SIGN ILLUMINATION

A. ILLUMINATION STANDARDS

Except as otherwise provided by this chapter, all signs may be illuminated subject to the requirements below.

1. **Shielding Required:** Illuminated signs giving off light resulting in glare, blinding, or any other such adverse effect on traffic shall not be erected or maintained.

2. **Setback Required:** Except for permitted subdivision entrance signs, all illuminated signs shall be setback at least 50 feet from any side or rear property line shared with an AR, RR, RN, MH, LDR, MDR, HDR, and UR District.

3. **Lighting:** All lighting shall be in conformance with the provisions within this chapter.

7.4.10 MAINTENANCE AND UPKEEP OF SIGNS

All signs shall be maintained in a state of good repair. No sign shall be erected or allowed to remain erected that is structurally unsafe, hazardous, and in the opinion of the Administrator, constitutes a danger to public safety. If in the opinion of the Administrator, any sign should become insecure, in danger of falling, or otherwise unsafe, the owner thereof or the person or firm maintaining the sign shall, upon written notice from the Administrator, secure or remove the sign within 10 days after written notification is delivered. If such sign is not removed or repaired in a manner approved by the Administrator within 10 days after written notification is delivered, the Administrator shall have the right to remove the sign and dispose of the sign.

7.4.11 VIOLATIONS

A. VIOLATIONS

1. **Signs on Public Property:** Any sign installed or placed on public property, except in conformance with the requirements of this section, shall be forfeited to the public and subject to confiscation.

2. **Other Violations:** Any of the following shall be a violation of this ordinance and shall be subject to the enforcement remedies and penalties provided by Chapter 9 of this ordinance and by state law:

   a. To install, create, erect, place, enlarge, enhance, or maintain any sign in a way that is inconsistent with the provisions of this ordinance.

   b. To install, create, erect, place, enlarge, or enhance any sign requiring a permit without such a permit.

   c. To install, create, erect, enlarge, place, enhance, or maintain any sign in a way that is inconsistent with any plan or permit governing such sign or the zoning lot on which the sign is located.

   d. To fail to remove any sign that is installed, created, erected, placed, or maintained in violation of this ordinance.

   e. Failure to comply will result in penalties of a minimum of $500.00 per day.

3. **Separate Violations:** Each sign installed, created, erected, placed, or maintained in violation of this ordinance shall be considered a separate violation when applying the penalty provisions of this ordinance. Each such day of a continued violation shall be considered a separate violation when applying the penalty provisions of this ordinance.

8 NATURAL RESOURCES PROTECTION

8.1 GENERAL

8.1.1 AUTHORITY AND ENACTMENT

A. FLOOD DAMAGE PREVENTION

The legislature of the State of South Carolina has in SC Code of Laws, Title 4, Chapters 9 (Article 1), 25, and 27, and amendments thereto, delegated the responsibility to local governmental units to adopt regulations designed to promote the public health, safety, and general welfare of its citizenry.

B. STORMWATER MANAGEMENT AND SEDIMENT AND EROSION CONTROL

This article may be cited as the "Stormwater Management Ordinance of Lancaster County" and is adopted pursuant to S.C. Code 1976, § 48-14-10 et seq., S.C. Code 1976, § 5-7-30, and South Carolina Land Resources Conservation Commission Regulations 72-300 through 72-316.

8.1.2 FINDINGS OF FACT

A. FLOOD DAMAGE PREVENTION

The Special Flood Hazard Areas within the jurisdiction of Lancaster County are subject to periodic inundation which may result in loss of life, property, health and safety hazards, disruption of commerce and governmental services, extraordinary public expenditures of flood protection and relief, and impairment of the tax base, all of which adversely affect the public health, safety, and general welfare.

Furthermore, these flood losses are caused by the cumulative effect of obstructions in floodplains causing increases in flood heights and velocities, and by the occupancy in flood prone areas by uses vulnerable to floods or hazardous to other lands which are inadequately elevated, floodproofed, or otherwise unprotected from flood damages.

B. STORMWATER MANAGEMENT AND SEDIMENT AND EROSION CONTROL

The South Carolina Department of Health and Environmental Control (SCDHEC) has issued regulations entitled "National Pollutant Discharge Elimination System Permit Program (South Carolina Code of Laws Title 48). These regulations are in accordance with the Clean Water Act requirement that SCDHEC issues permits for all construction projects over 1 acre; many industrial sites; and all regulated Municipal Separate Storm Sewer Systems (MS4s) to prevent, identify, and remove illegal discharges and to implement a stormwater public education program.

8.1.3 ORDINANCE ENFORCEMENT

A. DUTIES

One of the primary duties of the Administrator or designee shall be to review all stormwater applications and issue permits for those projects that are in compliance with the provisions of this article. The Administrator or designee shall be responsible for the administration and enforcement of this chapter.

B. INTERGOVERNMENTAL RELATIONSHIPS

Included as part of this chapter is a delineation of requirements and duties required of and accepted by the Administrator or designee. Certain requirements or duties specified by FEMA and the South Carolina Department of Health and Environmental Control (SCDHEC) relate only to the intergovernmental relationship between a community and FEMA, the South Carolina Department of Natural Resources (SCDNR), or SCDHEC for the purposes of that community obtaining or maintaining eligibility for the National Flood Insurance Program (NFIP) and Qualified Local Program Status.

The following agencies should be consulted and permits obtained when applicable:

- United States Army Corps of Engineers (ACOE)
- South Carolina Department of Transportation (SCDOT)
- South Carolina Department of Health and Environmental Control (SCDHEC)
- South Carolina Department of Natural Resources (SCDNR)
- Lancaster County Building Permits
- State Historical Preservation Agency
- United States Fish and Wildlife Service
- Federal Emergency Management Agency (FEMA)

8.1.4 PURPOSE

A. FLOOD DAMAGE PREVENTION

1. It is the purpose of the flood damage prevention provisions of this chapter to protect human life and health, minimize property damage, and encourage appropriate construction practices to minimize public and private losses due to flood conditions by:

   a. Requiring that uses vulnerable to floods, including facilities which serve such uses, be protected against flood damage at the time of initial construction;

   b. Restricting or prohibiting uses which are dangerous to health, safety, and property due to water or erosion hazards, or which increase flood heights, velocities, or erosion;

   c. Controlling the alteration of natural floodplains, stream channels, and natural protective barriers which are involved in the accommodation of flood waters;

   d. Controlling filling, grading, dredging, and all other development which may increase erosion or flood damage; and

   e. Preventing or regulating the construction of flood barriers which will unnaturally divert floodwaters or which may increase flood hazards to other lands.

2. Specific objectives of the flood damage prevention provisions are as follows:

   a. To protect human life and health;

   b. To help maintain a stable tax base by providing for the sound use and development of flood prone areas in such a manner as to minimize flood blight areas;

   c. To insure that potential homebuyers are notified that property is in a special flood hazard area;

   d. To minimize damage to public facilities and utilities (i.e. water and gas mains; electric, telephone, and sewer lines; streets; and bridges) that are located in the floodplain;

   e. To minimize prolonged business interruptions; and

   f. To minimize expenditure of public money for costly flood control projects and rescue and relief efforts associated with flooding.

3. Floodplains are an important asset to the community. They perform vital natural functions such as temporary storage of floodwaters, moderation of peak flood flows, maintenance of water quality, groundwater recharge, prevention of erosion, habitat for diverse natural wildlife populations, recreational opportunities, and aesthetic quality. These functions are best served if floodplains are kept in their natural state. Wherever

possible, the natural characteristics of floodplains and their associated wetlands and water bodies should be preserved and enhanced. Decisions to alter floodplains, especially floodways and stream channels, should be the result of careful planning processes that evaluate resource conditions and human needs.

B. STORMWATER MANAGEMENT AND SEDIMENT AND EROSION CONTROL

1. The stormwater management provisions of this chapter are intended to protect water quality for present and future residents of the County and surrounding regions by limiting the amount of pollutants including, but not limited to, nitrogen in stormwater runoff that makes its way into the County's stormwater drainage system. Specific objectives include protection of riparian buffers, control of nitrogen export from development, control of peak stormwater runoff, and the use of best management practices. The stormwater management provisions of this chapter are further intended to provide for the enforcement of the County's stormwater management program; to prohibit non-stormwater discharges to the County stormwater drainage system, require the removal of illicit connections to the County stormwater drainage system and prevent improper disposal of materials that degrade water quality.

2. The erosion and sedimentation control provisions of this ordinance are adopted for the purposes of regulating certain land-disturbing activity to control accelerated erosion and sedimentation in order to prevent the pollution of water and other damage to lakes, watercourses, and other public and private property by sedimentation.

8.1.5 PERMITS REQUIRED

A. FLOODPLAIN DEVELOPMENT PERMIT

A Development Permit shall be required in conformance with the provisions of this ordinance prior to the commencement of any development activities. No structure or land shall hereafter be located, extended, converted, or structurally altered without full compliance with the terms of this ordinance and other applicable regulations.

B. STORMWATER MANAGEMENT PERMIT

No person shall construct, repair or alter the stormwater drainage system for the purpose of draining water from any land or premises, or commence any development activities before receiving a Stormwater Management Permit according to the provisions of this chapter.

C. GRADING (EROSION AND SEDIMENTATION CONTROL) PERMIT

No person shall undertake any land-disturbing activity as specified by the erosion and sedimentation control provisions of this chapter and SCDHEC and EPA requirements until plans for controlling erosion associated with the activity have been reviewed and approved by either SCDHEC or Lancaster County as required by this ordinance.

8.1.6 REQUIRED CONFORMANCE TO THE LANCASTER COUNTY SPECIFICATIONS MANUAL

The Lancaster County Manual of Specifications, Standards and Design (MSSD) is herein incorporated as Appendix C and by reference. Conformance to the Manual of Specifications, Standards and Design is required in addition to the provisions in this ordinance.

8.1.7 APPLICABILITY

A. FLOOD DAMAGE PREVENTION

These regulations shall apply to all areas of special flood hazard within the jurisdiction of unincorporated Lancaster County as identified by the Federal Emergency Management Agency (FEMA) Flood Insurance Rate Maps (FIRMs) and Flood Insurance Study (FIS).

The FEMA FIRM map panels in the Wateree watershed have been revised to be effective September 28, 2018. The revised FEMA FIRM panels are numbered:

45057C0350E	45057C0375E	45057C400E	45057C460E	45057C500E	45057C0525E

The FEMA FIRM map panels effective May 16, 2017 include the following:

45057C0008E	45057C0009E	45057C0017E	45057C0020E	45057C0039E	45057C0040E
45057C0076E	45057C0077E	45057C0078E	45057C0079E	45057C0085E	45057C0086E
45057C0087E	45057C0090E	45057C0091E	45057C0095E	45057C0231E	45057C0232E
45057C0251E	45057C0252E	45057C0255E	45057C0256E	45057C0257E	45057C0260E

The FEMA FIRM panels effective June 16, 2011 include the following:

45057C0060D	45057C0070D	45057C0110D	45057C0120D	45057C0130D	45057C0135D
45057C0140D	45057C0143D	45057C0145D	45057C0165D	45057C0175D	45057C0200D
45057C0225D	45057C0227D	45057C0229D	45057C0230D	45057C0233D	45057C0234D
45057C0240D	45057C0245D	45057C0265D	45057C0270D	45057C0300D	45057C0325D
45057C0360D	45057C0385D	45057C0415D	45057C0425D	45057C0450D	

The panels referenced and the revised FIS effective September 28, 2018 are hereby adopted by reference and declared to be a part of this ordinance. (Ord. No. 2017-1435, 4.10.17; Ord. No. 2018-1527, 9.10.18)

1. **Interpretation:** In the interpretation and application of this ordinance all provisions shall be considered as minimum requirements, liberally construed in favor of the governing body, and deemed neither to limit nor repeal any other powers granted under State law. This ordinance is not intended to repeal, abrogate, or impair any existing easements, covenants, or deed restrictions. However, where this ordinance and another conflict or overlap, whichever imposes the more stringent restrictions, shall prevail.

2. **Warning and Disclaimer of Liability:** The degree of flood protection required by this ordinance is considered reasonable for regulatory purposes and is based on scientific and engineering consideration. Larger floods can and will occur on rare occasions. Flood heights may be increased by man-made or natural causes. This ordinance does not imply that land outside the areas of special flood hazard or uses permitted within such areas will be free from flooding or flood damages. This ordinance shall not create liability on the part of Lancaster County or by any officer or employee thereof for any flood damages that result from reliance on this ordinance or any administrative decision lawfully made hereunder.

B. The various erosion control, flood damage prevention, stormwater management and watershed protection provisions of this chapter apply according to the table below:

Regulation Type	Geographic Applicability	Applicable Subsections
Flood Damage Prevention Regulations	All Districts	Section 8.2
Stormwater Management Regulations	All Districts	Sections 8.3 and 8.7
Erosion and Sedimentation Control Regulations	All Districts	Sections 8.4, 8.5 and 8.6

8.2 PROVISIONS FOR FLOOD HAZARD REDUCTION

8.2.1 GENERAL STANDARDS

Development may not occur in the Special Flood Hazard Area (SFHA) where alternative locations exist due to the inherent hazards and risks involved. Before a permit is issued, the applicant shall demonstrate that new structures cannot be located out of the SFHA and that encroachments onto the SFHA are minimized. In all areas of special flood hazard the following provisions are required:

A. ANCHORING

All new construction and substantial improvements shall be anchored to prevent flotation, collapse, and lateral movement of the structure.

B. FLOOD RESISTANT MATERIALS AND EQUIPMENT

All new construction and substantial improvements shall be constructed with flood resistant materials and utility equipment resistant to flood damage in accordance with Technical Bulletin 2, *Flood Damage-Resistant Materials Requirements*, dated August 2008, and available from the Federal Emergency Management Agency.

C. MINIMIZE FLOOD DAMAGE

All new construction and substantial improvements shall be constructed by methods and practices that minimize flood damages.

D. CRITICAL DEVELOPMENT

Critical development shall be elevated to the 500 year flood elevation or be elevated to the highest known historical flood elevation (where records are available), whichever is greater. If no data exists establishing the 500 year flood elevation or the highest known historical flood elevation, the applicant shall provide a hydrologic and hydraulic engineering analysis that generates 500 year flood elevation data.

E. UTILITIES

Electrical, ventilation, plumbing, heating and air conditioning equipment (including ductwork), and other service facilities shall be designed and/or located so as to prevent water from entering or accumulating within the components during conditions of the 100 year base flood plus 2 feet (freeboard).

F. WATER SUPPLY SYSTEMS

All new and replacement water supply systems shall be designed to minimize or eliminate infiltration of floodwaters into the system.

G. SANITARY SEWAGE SYSTEMS

New and replacement sanitary sewage systems shall be designed to minimize or eliminate infiltration of floodwaters into the systems and discharges from the systems into floodwaters. On-site waste disposal systems shall be located and constructed to avoid impairment to them or contamination from them during flooding.

H. GAS OR LIQUID STORAGE TANKS

All gas or liquid storage tanks, either located above ground or buried, shall be anchored to prevent floatation and lateral movement resulting from hydrodynamic and hydrostatic loads.

I. ALTERATION, REPAIR, RECONSTRUCTION, OR IMPROVEMENTS

Any alteration, repair, reconstruction, or improvement to a structure that is in compliance with the provisions of this ordinance, shall meet the requirements of "new construction" as contained in this ordinance. This includes post-FIRM development and structures.

J. NON-CONFORMING BUILDINGS OR USES

Non-conforming buildings or uses may not be enlarged, replaced, or rebuilt unless such enlargement or reconstruction is accomplished in conformance with the provisions of this ordinance. Provided, however, nothing in this ordinance shall prevent the repair, reconstruction, or replacement of an existing building or structure located totally or partially within the floodway, provided that the bulk of the building or structure below base flood elevation in the floodway is not increased and provided that such repair, reconstruction, or replacement meets all of the other requirements of this ordinance.

K. AMERICAN WITH DISABILITIES ACT (ADA)

A building must meet the specific standards for floodplain construction outlined in Section 8.2.2, as well as any applicable ADA requirements. The ADA is not justification for issuing a variance or otherwise waiving these requirements. Also, the cost of improvements required to meet the ADA provisions shall be included in the costs of the improvements for calculating substantial improvement.

L. REASONABLY SAFE FROM FLOODING

Review all permit applications to determine whether proposed building sites will be reasonably safe from flooding.

8.2.2 SPECIFIC STANDARDS

In all areas of special flood hazard (Zones A, AE, AH, AO, A1-30, V, and VE) where base flood elevation data has been provided, the following provisions are required:

A. RESIDENTIAL CONSTRUCTION

New construction of any residential structure (including manufactured homes) shall have the lowest surrounding grade elevated no lower than 2 feet above the 100 year base flood elevation. Substantial improvement of any residential structure (including manufactured homes) shall have the lowest floor elevated no lower than 2 feet above the 100 year base flood elevation no basements are permitted. Should solid foundation perimeter walls be used to elevate an existing structure, flood openings sufficient to automatically equalize hydrostatic flood forces, shall be provided in accordance with the elevated buildings requirements in Section 8.2.2.D.

B. NON-RESIDENTIAL CONSTRUCTION

1. New construction of any commercial, industrial, or non-residential structure (including manufactured homes) shall have the lowest surrounding grade elevated no lower than 2 feet above the 100 year base flood elevation. Substantial improvement of any commercial, industrial, or non-residential structure (including manufactured homes) shall have the lowest

floor elevated no lower than 2 feet above the level of the 100 year base flood elevation. Should solid foundation perimeter walls be used to elevate an existing structure, flood openings sufficient to automatically equalize hydrostatic flood forces, shall be provided in accordance with the elevated buildings requirements in Section 8.2.2.D. No basements are permitted. Structures located in A-zones may be floodproofed in lieu of elevation provided that all areas of the structure below the required elevation are watertight with walls substantially impermeable to the passage of water, using structural components having the capability of resisting hydrostatic and hydrodynamic loads and the effect of buoyancy.

2. A registered, professional engineer or architect shall certify that the standards of this subsection are satisfied. Such certifications shall be provided to the official as set forth in the floodproofing certification requirements in Section 9.2.8.C.b.i. A variance may be considered for wet-floodproofing agricultural structures in accordance with the criteria outlined in Section 9.2.12.C.2.b.vi of this ordinance. Agricultural structures not meeting the criteria of Section 9.2.12.C.2.b.vi must meet the non-residential construction standards and all other applicable provisions of this ordinance. Structures that are floodproofed are required to have an approved maintenance plan with an annual exercise. The local floodplain administrator must approve the maintenance plan and notification of the annual exercise shall be provided to it.

C. MANUFACTURED HOMES

1. Manufactured homes that are placed or substantially improved on sites outside a manufactured home park or subdivision, in a new manufactured home park or sub-division, in an expansion to an existing manufactured home park or subdivision, or in an existing manufactured home park or subdivision on which a manufactured home has incurred "substantial damage" as the result of a flood, must be elevated on a permanent foundation such that the lowest floor of the manufactured home is elevated no lower than 2 feet above the 100 year base flood elevation and be securely anchored to an adequately anchored foundation system to resist flotation, collapse, and lateral movement.

2. Manufactured homes that are to be placed or substantially improved on sites in an existing manufactured home park or subdivision that are not subject to the provisions for residential construction in Section 8.2.2.A of this ordinance must be elevated so that the lowest floor of the manufactured home is elevated no lower 2 feet than above the 100 year base flood elevation, and be securely anchored to an adequately anchored foundation to resist flotation, collapse, and lateral movement.

3. Manufactured homes shall be anchored to prevent flotation, collapse, and lateral movement. For the purpose of this requirement, manufactured homes must be anchored to resist flotation, collapse, and lateral movement in accordance with Section 40-29-10 of the *South Carolina Manufactured Housing Board Regulations*, as amended. Additionally, when the elevation requirement would be met by an elevation of the chassis 36 inches or less above the grade at the site, the chassis shall be supported by reinforced piers or engineered foundation. When the elevation of the chassis is above 36 inches in height an engineering certification is required.

4. An evacuation plan must be developed for evacuation of all residents of all new, substantially improved or substantially damaged manufactured home parks or subdivisions located within flood-prone areas. This plan shall be filed with and approved by the local floodplain administrator and the local Emergency Preparedness Coordinator.

D. ELEVATED BUILDINGS

New construction and substantial improvements of elevated buildings that include fully enclosed areas below the lowest floor that are usable solely for the parking of vehicles, building access, or limited storage in an area other than a basement, and which are subject to flooding shall be designed to preclude finished space and be designed to automatically equalize hydrostatic flood

forces on exterior walls by allowing for the entry and exit of floodwaters.

1. Designs for complying with this requirement must either be certified by a professional engineer or architect or meet or exceed all of the following minimum criteria:

   a. Provide a minimum of two openings on different walls having a *total net area* of not less than one square inch for every square foot of enclosed area subject to flooding.

   b. The bottom of each opening must be no more than 1 foot above the higher of the interior or exterior grade immediately under the opening,

   c. Only the portions of openings that are below the 100 year base flood elevation (BFE) can be counted towards the required net open area.

   d. Openings may be equipped with screens, louvers, valves, or other coverings or devices provided they permit the automatic flow of floodwaters in both directions.

   e. Fill placed around foundation walls must be graded so that the grade inside the enclosed area is equal to or higher than the adjacent grade outside the building on at least one side of the building.

2. Hazardous Velocities - Hydrodynamic pressure must be considered in the design of any foundation system where velocity waters or the potential for debris flow exists. If flood velocities are excessive (greater than 5 feet per second), foundation systems other than solid foundations walls should be considered so that obstructions to damaging flood flows are minimized.

3. Enclosures Below Lowest Floor

   a. Access to the enclosed area shall be the minimum necessary to allow for parking of vehicles (garage door) or limited storage of maintenance equipment used in connection with the premises (standard exterior door) or entry to the living area (stairway or elevator).

   b. The interior portion of such enclosed area shall not be finished or partitioned into separate rooms, must be void of utilities except for essential lighting as required for safety, and cannot be temperature controlled.

   c. One wet location switch and/or outlet connected to a ground fault interrupt breaker may be installed below the required lowest floor elevation specified in the specific standards outlined in Section 8.2.2.A, B, and C.

   d. All construction materials below the required lowest floor elevation specified in the specific standards outlined in Section 8.2.2.A, B, C, and D should be of flood resistant materials.

E. FLOODWAYS

The floodway is an extremely hazardous area due to the velocity of floodwaters that carry debris and potential projectiles and has erosion potential. The following provisions shall apply within such areas:

1. No encroachments, including fill, new construction, substantial improvements, additions, and other developments shall be permitted unless:

   a. It has been demonstrated through hydrologic and hydraulic analyses performed in accordance with standard engineering practice that the proposed encroachment would not result in any increase in the flood levels during the occurrence of the 100 year base flood. Such certification and technical data shall be presented to the local floodplain administrator, or

b. A Conditional Letter of Map revision (CLOMR) has been approved by FEMA. A Letter of Map Revision must be obtained upon completion of the proposed development.

2. If Section 8.2.2.E.1.a is satisfied, all new construction and substantial improvements shall comply with all applicable flood hazard reduction provisions of Section 8.2.2.

3. No manufactured homes shall be permitted, except in an existing manufactured home park or subdivision. A replacement manufactured home may be placed on a lot in an existing manufactured home park or subdivision provided the anchoring and the elevation standards of Section 8.2.2.C and the encroachment standards of Section 8.2.2.E.1.a are met.

4. Permissible uses within floodways may include: general farming, pasture, outdoor plant nurseries, horticulture, forestry, wildlife sanctuary, game farm, and other similar agricultural, wildlife, and related uses. Also, lawns, gardens, play areas, picnic grounds, and hiking and horseback riding trails are acceptable uses, provided that they do not employ structures or fill. Substantial development of a permissible use may require a no-impact certification. The uses listed in this subsection are permissible only if and to the extent that they do not cause any increase in base flood elevations or changes to the floodway configuration.

F. RECREATIONAL VEHICLES

1. A recreational vehicle is ready for highway use if it is:

a. On wheels or jacking system;

b. Attached to the site only by quick-disconnect type utilities and security devices; and

c. Has no permanently attached additions.

2. Recreational vehicles placed on sites shall either be:

a. On site for fewer than 180 consecutive days; or

b. Be fully licensed and ready for highway use, or ***meet*** the development permit and certification requirements of Section 9.2.8.C3.b, general standards outlined Section 8.2.2.

G. MAP MAINTENANCE ACTIVITIES

The National Flood Insurance Program (NFIP) requires flood data to be reviewed and approved by FEMA. This ensures that flood maps, studies and other data accurately represent flooding conditions so appropriate floodplain management criteria are based on current data. The following map maintenance activities are identified:

1. Requirement to Submit New Technical Data

a. For all development proposals that impact floodway delineations or base flood elevations, the community shall ensure that technical or scientific data reflecting such changes be submitted to FEMA as soon as practicable, but no later than six months of the date such information becomes available. These development proposals include; but not limited to:

i. Floodway encroachments that increase or decrease base flood elevations or alter floodway boundaries;

ii. Fill sites to be used for the placement of proposed structures where the applicant desires to remove the site from the special flood hazard area;

iii. Alteration of watercourses that result in a relocation or elimination of the special flood hazard area, including the placement of culverts; and

iv. Subdivision or large scale development proposals requiring the establishment of

base flood elevations in accordance with Section 8.2.3.

b. It is the responsibility of the applicant to have technical data, required in accordance with Section 8.2.2.G, prepared in a format required for a Conditional Letter of Map Revision or Letter of Map Revision, and submitted to FEMA. Submittal and processing fees for these map revisions shall also be the responsibility of the applicant.

c. The local floodplain administrator shall require a Conditional Letter of Map Revision prior to the issuance of a floodplain development permit for:

i. Proposed floodway encroachments that increase the base flood elevation; and

ii. Proposed development which increases the base flood elevation by more than one foot in areas where FEMA has provided base flood elevations but no floodway.

d. Floodplain development permits issued by the local floodplain administrator shall be conditioned upon the applicant obtaining a Letter of Map Revision from FEMA for any development proposal subject to 8.2.2.G.

2. Right to Submit New Technical Data - The floodplain administrator may request changes to any of the information shown on an effective map that does not impact floodplain or floodway delineations or base flood elevations, such as labeling or plan metric details. Such a submission shall include appropriate supporting documentation made in writing by the local jurisdiction and may be submitted at any time.

H. ACCESSORY STRUCTURES

1. A detached accessory structure or garage, the cost of which is greater than $3,000, must comply with the requirements as outlined in FEMA's Technical Bulletin 7-93 *Wet Floodproofing Requirements or be elevated in accordance with 8.2.2.A and D or dry floodproofed in accordance with Section 8.2.2.B.*

2. If accessory structures of $3,000 or less are to be placed in the floodplain, the following criteria shall be met:

a. Accessory structures shall not be used for any uses other than the parking of vehicles and storage,

b. Accessory structures shall be designed to have low flood damage potential,

c. Accessory structures shall be constructed and placed on the building site so as to offer the minimum resistance to the flow of floodwaters,

d. Accessory structures shall be firmly anchored to prevent flotation, collapse and lateral movement of the structure,

e. Service facilities such as electrical and heating equipment shall be installed in accordance with Section 8.2.1.A,

f. Openings to relieve hydrostatic pressure during a flood shall be provided below base flood elevation in conformance with Section 8.2.2.D.1, and

g. Accessory structures shall be built with flood resistance materials in accordance with Technical Bulletin 2, *Flood Damage-Resistant Materials Requirements*, dated 8/08, and available from the Federal Emergency Management Agency. Class 4 and 5 materials, referenced therein, are acceptable flood-resistant materials.

I. SWIMMING POOL UTILITY EQUIPMENT ROOMS

If the building cannot be built at or above the BFE, because of functionality of the equipment then a structure to house the utilities for the pool may be built below the BFE with the following

provisions:

1. Meet the requirements for accessory structures in Section 8.2.2.H.
2. The utilities must be anchored to prevent flotation and shall be designed to prevent water from entering or accumulating within the components during conditions of the base flood.

J. ELEVATORS

1. Install a float switch system or another system that provides the same level of safety necessary for all elevators where there is a potential for the elevator cab to descend below the BFE during a flood per FEMA's Technical Bulletin 4-93 Elevator Installation for Buildings Located in Special Flood Hazard Areas.
2. All equipment that may have to be installed below the 100 year BFE such as counter weight roller guides, compensation cable and pulleys, and oil buffers for traction elevators and the jack assembly for a hydraulic elevator must be constructed using flood-resistant materials where possible per FEMA's Technical Bulletin 4-93 Elevator Installation for Buildings Located in Special Flood Hazard Areas.

K. FILL

An applicant shall demonstrate that fill is the only alternative to raising the building to meet the residential and non-residential construction requirements of Section 8.2.2.A or Section 8.2.2.B, and that the amount of fill used will not affect the flood storage capacity or adversely affect adjacent properties. The following provisions shall apply to all fill placed in the special flood hazard area:

1. Fill may not be placed in the floodway unless it is in accordance with the requirements in Section 8.2.2.E.
2. Fill may not be placed in tidal or non-tidal wetlands without the required state and federal permits.
3. Fill must consist of soil and rock materials only. A registered professional geotechnical engineer may use dredged material as fill only upon certification of suitability. Landfills, rubble fills, dumps, and sanitary fills are not permitted in the floodplain.
4. Fill used to support structures must comply with ASTM Standard D-698, and its suitability to support structures certified by a registered, professional engineer.
5. Fill slopes shall be no greater than two horizontal to one vertical. Flatter slopes may be required where velocities may result in erosion.
6. The use of fill shall not increase flooding or cause drainage problems on neighboring properties.
7. Fill may not be used for structural support in the coastal high hazard areas.
8. Will meet the requirements of FEMA Technical Bulletin 10-01, *Ensuring That Structures Built On Fill in or Near Special Flood Hazard Areas Are Reasonable Safe from Flooding.*

L. STANDARDS FOR SUBDIVISION PROPOSALS AND OTHER DEVELOPMENT

1. All subdivision proposals and other proposed new development shall be consistent with the need to minimize flood damage and are subject to all applicable standards in these regulations.
2. All subdivision proposals and other proposed new development shall have public utilities and facilities such as sewer, gas, electrical, and water systems located and constructed to minimize flood damage.

3. All subdivision proposals and other proposed new development shall have adequate drainage provided to reduce exposure to flood damage.

4. The applicant shall meet the requirement to submit technical data to FEMA in 8.2.2.G when a hydrologic and hydraulic analysis is completed that generates base flood elevations.

8.2.3 STANDARDS FOR STREAMS WITHOUT ESTABLISHED BASE FLOOD ELEVATIONS AND FLOODWAYS

Located within the areas of special flood hazard (Zones A and V) established in Section 8.1.7.A are small streams where no base flood data has been provided and where no floodways have been identified. The following provisions apply within such areas:

A. HYDRAULIC AND HYDROLOGIC ENGINEERING ANALYSIS

In all areas of special flood hazard where base flood elevation data are not available, the applicant shall provide a hydrologic and hydraulic engineering analysis that generates base flood elevations for all subdivision proposals and other proposed developments containing at least 50 lots or 5 acres, whichever is less.

B. NO ENCROACHMENTS, FILL, NEW CONSTRUCTION, OR SUBSTANTIAL IMPROVEMENTS

No encroachments, including fill, new construction, substantial improvements and new development shall be permitted within 100 feet of the stream bank unless certification with supporting technical data by a registered professional engineer is provided demonstrating that such encroachments shall not result in any increase in flood levels during the occurrence of the base flood discharge.

C. APPLICABLE FLOOD HAZARD ORDINANCE PROVISIONS

If Section 8.2.3.A is satisfied and base flood elevation data is available from other sources, all new construction and substantial improvements within such areas shall comply with all applicable flood hazard ordinance provisions of Section 8.2.2 and shall be elevated or floodproofed in accordance with elevations established in accordance with Section 9.2.8.C.5.k.

D. BEST AVAILABLE DATA

Data from preliminary, draft, and final Flood Insurance Studies constitutes best available data. Refer to FEMA Floodplain Management Technical Bulletin 1-98 *Use of Flood Insurance Study (FIS) Data as Available Data*. If an appeal is pending on the study in accordance with 44 CFR Ch. 1, Part 67.5 and 67.6, the data does not have to be used.

E. When base flood elevation (BFE) data is not available from a federal, state, or other source one of the following methods may be used to determine a BFE For further information regarding the methods for determining BFEs listed below, refer to FEMA's manual *Managing Floodplain Development in Approximate Zone A Areas*:

1. Contour Interpolation

   a. Superimpose approximate Zone A boundaries onto a topographic map and estimate a BFE.

   b. Add one-half of the contour interval of the topographic map that is used to the BFE.

2. Data Extrapolation - A BFE can be determined if a site within 500 feet upstream of a reach of a stream reach for which a 100-year profile has been computed by detailed methods, and the floodplain and channel bottom slope characteristics are relatively similar to the downstream reaches. No hydraulic structures shall be present.

3. Hydrologic and Hydraulic Calculations- Perform hydrologic and hydraulic calculations to determine BFEs using FEMA approved methods and software.

8.2.4 STANDARDS FOR STREAMS WITH ESTABLISHED BASE FLOOD ELEVATIONS BUT WITHOUT FLOODWAYS

Along rivers and streams where Base Flood Elevation (BFE) data is provided but no floodway is identified for a Special Flood Hazard Area on the FIRM or in the FIS. The following provision shall apply within such areas:

No encroachments including fill, new construction, substantial improvements, or other development shall be permitted unless certification with supporting technical data by a registered professional engineer is provided demonstrating that the cumulative effect of the proposed development, when combined with all other existing and anticipated development, will not increase the water surface elevation of the base flood more than one foot at any point within the community.

8.2.5 STANDARDS FOR AREAS OF SHALLOW FLOODING (AO ZONES)

Located within the areas of special flood hazard established in Section 8.1.7.A are areas designated as shallow flooding. The following provisions shall apply within such areas:

A. All new construction and substantial improvements of residential structures shall have the lowest floor elevated to at least as high as the depth number specified on the Flood Insurance Rate Map, in feet, above the highest adjacent grade. If no depth number is specified, the lowest floor shall be elevated at least 3 feet above the highest adjacent grade.

B. All new construction and substantial improvements of non-residential structures shall:

1. Have the lowest floor elevated to at least as high as the depth number specified on the Flood Insurance Rate Map, in feet, above the highest adjacent grade. If no depth number is specified, the lowest floor shall be elevated at least 3 feet above the highest adjacent grade; or,

2. Be completely flood-proofed together with attendant utility and sanitary facilities to or above that level so that any space below that level is watertight with walls substantially impermeable to the passage of water and with structural components having the capability of resisting hydrostatic and hydrodynamic loads and effects of buoyancy. Certification is required as stated in Section 9.2.8.C.4.g.

C. All structures on slopes must have drainage paths around them to guide water away from the structures.

8.3 STORMWATER PERMITS - GENERAL

8.3.1 REGULATED DEVELOPMENT

No person, firm, corporation or governmental agency shall commence any development regulated by this chapter on any lot or parcel of land without first obtaining a stormwater permit from Lancaster County. A permit shall be issued if the proposed development meets the requirements of this chapter. A final Certificate of Occupancy will not be issued until the performance standards of this chapter are met.

8.3.2 STORMWATER PERMIT FEE

For projects located within the designated MS4, the Administrator or designee shall compile the requirements for the fees in an administrative manual. The manual shall be approved by the County Council and shall be made available to the public.

8.3.3 STORMWATER PERMIT CLASSIFICATION

The stormwater permit has been developed such that the level of permitting required matches the scope of work. One of the following permits shall be required:

A. MAJOR STORMWATER PERMIT

A major stormwater permit typically requires detention, stormwater quality and quantity control, preparation of a stormwater pollution prevention plan, and may include additional requirements for activities in special management areas. A major stormwater permit is required when a development:

1. Disturbs more than 2 acres;
2. Creates a new impervious surface greater than or equal to 0.25 acres;
3. Is located in a regulatory floodplain;
4. Modifies a riverine flood prone area where the tributary drainage area is greater than 40 acres;
5. Modifies a non-riverine flood prone area where the tributary drainage area is greater than 20 acres;
6. Is located in a depressional storage area which has a volume larger than 0.75 acre-foot;
7. Impacts a wetland or riparian environment of 1/10 acre or more within an area defined as waters of the U.S. or waters of the state; or
8. Public road or trail development that results in 1.5 acres or more of additional impervious surface per mile, for linear or nonlinear projects.

B. MINOR STORMWATER PERMIT

A minor stormwater permit typically requires stormwater quality and may include additional requirements for activities in special management areas. A minor stormwater permit is required when a development:

1. Disturbs more than one but less than 2 acres; or
2. Has a total impervious surface area ratio of 60 percent or greater and disturbs 50 percent or more of the parcel or larger common plan over a five year period.
3. Soil erosion and sediment control permit. A soil erosion and sediment control permit is required when a development disturbs 10,000 square feet or more but does not meet any of the thresholds listed above. A soil erosion and sediment control permit may include additional requirements for activities in special management areas.

8.3.4 LARGER COMMON PLAN

A. PHASED PROJECTS AND CONTIGUOUS LOTS OR PARCELS OF LAND

Larger common plans are defined as a) a construction activity that is completed in separate stages, separate phases, or in combination with other construction activities that ultimately disturbs 10,000 square feet or more over a period of five years; or b) any proposed development activity that occurs on a lot or parcel of land that has contiguous lots or parcels of lands owned in whole, or in part, by the same property owner, then the criteria as defined in this chapter will be applied to the total land area compiled from aggregate ownership parcels.

B. EXPIRATION

A larger common plan expires five years after the site is stabilized in compliance with the requirements of this article, all proposed construction causing land-disturbing activities have been completed, and the notice of termination has been submitted and accepted by the state department of health and environmental control. Water quantity control shall not be required for modifications to these sites provided that the originally permitted curve number aligns with the proposed impervious surfaces. All other requirements of this article shall be met.

8.3.5 EXEMPTED DEVELOPMENT

All development shall meet the minimum state, federal and local regulations. Upon review and verification by the Administrator or designee, the following are exempt from specific ordinance requirements. However, no development is exempt from the floodplain, floodway, wetland, riparian environment, depressional storage, and soil erosion and sediment control provisions of this article.

A. Agricultural land management and agricultural practices, or the construction of on-farm buildings and structures less than one acre in size used in a farming operation.

B. Construction or land improvement of a single-family residence, a duplex dwelling, or their accessory structures which are separately built and are not part of a larger common plan.

C. Single-family residences or duplex dwellings not part of a larger common plan.

D. Single-family residences or duplex dwellings part of a larger common plan that are constructed in compliance with the approved stormwater permit for the larger common plan.

E. Maintenance of existing buildings, facilities, parking lot seal coating and resurfacing of roadways when the overall drainage pattern has not been significantly altered and will not cause impact to adjacent properties. The use of coal-tar based pavement sealcoat is prohibited.

F. Mining and mineral resource extraction operations conducted in accordance with a valid mining permit issued by the land and waste management division of the South Carolina department of health and environmental control.

G. Land-disturbing activities undertaken on forest land for the production and harvesting of timber and timber products regulated by the U.S. Forestry Service.

H. Emergency repairs of existing structures and facilities that require ground to be broken. Provided that the repairs are performed in a manner consistent with these regulations to the maximum extent feasible.

I. Construction activities of the state department of transportation conforming to the requirements of the latest edition of the South Carolina Standard Specifications for Highway Construction.

J. Activities relating to the routine maintenance and/or repair or rebuilding of the tracks, rights-of-way, bridges, communication facilities and any other related structures and facilities of a railroad company.

K. Land-disturbing activities that are conducted pursuant to, and are compliant with, another state or federal environmental permit, license or certification in which the state or federal permitting authority supersedes the County's authority as established by local ordinance and regulation.

L. Certain activities undertaken by utility providers that are not substantial land-disturbing activities and therefore are not intended to be regulated by this section. Provided that the repairs are performed in a manner consistent with these regulations to the maximum extent feasible. These activities include, but are not limited to, the following:

1. Installation of utilities on sites not part of larger common plan and which disturb less than 10,000 square feet.
2. Land-disturbing activities conducted pursuant to a federal environmental permit, including permits issued under Section 404 of the Federal Clean Water Act, and including permits issued by the Federal Energy Regulatory Commission.
3. Installation of utilities in a ditch section four feet or less in width.
4. Installation of utility poles.
5. Maintenance of easements and rights-of-way.

6. Service connections, i.e., tapping main lines and/or setting meters, including installation of a manhole, bellhole, underground vault, valve box or fire hydrants.

M. Projects for which an encroachment permit has been issued by the state department of transportation that are not part of a larger common plan and which disturb less than 10,000 square feet.

N. Land-disturbing activities conducted by a utility provider filing environmental reports, assessments or impact statements with the United States Department of Agriculture, Rural Electrification Administration, in regard to a project.

O. Any case in which a waiver or variance has been granted for the permit requirements upon a determination that the integrity of this section will not be violated by such action.

P. Fence installation, pole placement, drilling or other minor auxiliary construction activity which does not affect stormwater runoff rates, patterns, or volumes.

Q. Annexation agreements, if the stormwater management systems are installed, functioning and in compliance with all applicable stormwater regulations of the appropriate jurisdictional entity in effect at the time of construction. Water quantity control shall not be required for modifications to the site provided that the originally permitted curve number aligns with the proposed impervious surfaces. All other requirements of this article shall be met.

R. Stormwater permits approved prior to January 1, 2008, if the stormwater management systems are installed and in general compliance with all applicable stormwater regulations then in effect.

8.3.6 PERMIT EXTENSIONS AND TERMINATIONS

Among the causes for terminating a permit during its term or for denying a permit extension include, but are not limited to, the following:

A. Noncompliance with any condition of the permit; or

B. The permittee's failure to disclose fully all relevant facts in the application process or the permittee's misrepresentation of any relevant facts at any time; or

C. If the authorized work is not commenced within one year after issuance of the permit, or if the authorized work is suspended or abandoned for a period of 12 months after the time of commencing the work, unless an extension has been granted in writing by the Administrator or designee. The extension should be requested of the Administrator or designee in writing 30 days prior to the termination of the stormwater permit.

8.4 SEDIMENT AND EROSION CONTROL PERMITS WITHIN THE COUNTY'S REGULATED MS4

Effective November 1, 2017, the following performance standards, application requirements and other provisions apply to all development requiring a stormwater permit within the County's regulated MS4. All the following application requirements shall be submitted when applicable to the development as determined by the Administrator or designee. Subsequent sections include additional provisions for development in special management areas.

8.4.1 SOIL EROSION AND SEDIMENT CONTROL PERMIT

A. APPLICATION REQUIREMENTS

The following requirements shall apply, at a minimum, for all development requiring a soil erosion and sediment control permit.

1. A soil erosion and sediment control permit and plans must be prepared, signed, and sealed by a professional engineer, Tier B land surveyor, architect or landscape architect. The person

preparing the plans must have professional competence in the area of soil erosion and sediment. All licensees must be of the state.

2. A completed soil erosion and sediment control permit application signed by the applicant.

3. A report to include:

a. A written narrative description of the proposed phasing (construction sequencing) of development of the site, including stripping and clearing, rough grading and construction, and final grading and landscaping. Phasing should identify the expected date on which clearing will begin, the estimated duration of exposure of cleared areas, and the sequence of installation of temporary sediment control measures (including perimeter controls), clearing and grading, installation of temporary soil stabilization measures, installation of storm drainage, paving streets and parking areas, final grading, establishment of permanent vegetative cover, and the removal of temporary measures. It shall be the responsibility of the applicant to notify the Administrator or designee of any significant changes that occur in the site development schedule after the initial soil erosion and sediment control plan has been approved.

b. A general description of the existing and proposed stormwater management system, including all discharge points, collection, conveyance, and storage facilities.

c. Supporting maps to include a FIRMette, USGS quadrangle map, and NRCS soils map.

d. A vicinity map identifying the parcel identification numbers of all parcels comprising the proposed development.

e. A capacity analysis of the stormwater management system components on-site. An off-site downstream capacity analysis may be required by the Administrator or designee when downstream flooding exists.

f. Design calculations for sediment and erosion control measures with the drainage area tributary to each sediment control measure delineated on an overall map.

g. Description of off-site fill or borrow volumes, locations, and methods of stabilization.

h. A color coded map depicting the existing impervious surfaces and total new impervious surfaces along with a summary table.

i. Any federal, state and local requirements, including, but not limited to, the applicable SCDHEC notice of intent, ACOE nationwide permit, FEMA letters of map change, jurisdictional wetland determination and endangered species permitting. Reference Appendix A for a partial list of additional permits that may be applicable.

4. A soil erosion and sediment control plan showing all measures appropriate for the development as approved by the Administrator or designee, to meet the objectives of this article throughout all phases of construction and permanently after completion of development of the site. Guidance regarding appropriate methods, procedures, controls measures, and implementation are included in the SCDHEC "Stormwater Management BMP Handbook", latest edition, but shall, at a minimum, include:

a. Proposed and existing elevations tied to the North American Vertical Datum of 1988. Horizontal datum survey control shall be South Carolina State Plane NAD83 HARN International Feet coordinates.

b. Off-site and on-site drainage features, overland flow paths, stormwater management system components.

c. Existing and proposed utilities which may include septic systems and wells.

d. Regulatory floodplains, wetland boundaries, buffer areas.

e. Location and description, including standard details, of all sediment control measures, including, but not limited to, construction entrance, silt fence, inlet protection, dust control, stockpile areas management, concrete washout areas, and sediment basins/traps and corresponding outlet details.

f. Location and description of all soil stabilization and erosion control measures, including seeding mixtures and rates, types of sod or vegetation, method of seedbed preparation, expected seeding dates, type and rate of lime and fertilizer application, kind and quantity of mulching for both temporary and permanent vegetative control measures, and types of non-vegetative stabilization measures.

g. Phased soil erosion and sediment control plans as required to meet the requirements of this article and to mitigate off-site soil migration and erosion throughout construction.

h. Adjoining lakes, streams, and other major drainage ways.

B. PERFORMANCE STANDARDS

The following requirements shall be met:

1. Soil disturbance shall be conducted in such a manner as to minimize erosion. Areas of the development site that are not to be graded shall be protected from construction traffic or other disturbance until final seeding is performed. Soil stabilization measures shall consider the time of year, site conditions, and the use of temporary and/or permanent measures.

2. Properties and channels adjoining development sites shall be protected from erosion and sedimentation. At points where concentrated flow leaves a development site, energy dissipation devices shall be placed at discharge locations and along the length of any outfall channel as necessary to provide a non-erosive velocity of flow from the structure to the watercourse so that the natural physical and biological characteristics and functions are maintained and protected.

3. Soil erosion and sediment control features shall be constructed prior to the commencement of disturbance of upland areas.

4. Disturbed areas shall be stabilized with temporary or permanent measures within 14 calendar days following the end of active disturbance, or re-disturbance, consistent with the following criteria or using an appropriate measure as approved by the Administrator or designee:

a. Appropriate temporary or permanent stabilization measures shall include seeding, mulching, sodding, and/or non-vegetative measures.

b. Areas or embankments having slopes greater than or equal to 3H:1V shall be stabilized with staked in place sod, mat, flexible growth medium or blanket in combination with seeding. Slopes with less than four-foot vertical rise shall not be required to meet the requirements of this subsection.

c. The 14-day stabilization requirement may be precluded where stabilization by the 14th day is prevented by snow cover or frozen ground conditions, in which case stabilization measures must be initiated as soon as practicable.

d. The site shall be considered permanently stabilized when all surface disturbing activities are complete and either of the two following criteria is met:

i. A uniform (e.g., evenly disturbed, without large bare areas) perennial vegetative cover with a density of 70 percent per square yard of the native background vegetative cover for the area has been established on all unpaved areas and areas not covered by permanent structures; or

ii. Equivalent permanent stabilization measures (such as riprap, gabions, or geotextiles) have been employed.

5. Land-disturbance activities in streams shall be avoided, where possible. If disturbance activities are unavoidable, the following requirements shall be met:

   a. Approved permits from the ACOE will be submitted to the Administrator or designee.

   b. Where stream construction crossings are necessary, temporary crossings shall be constructed of non-erosive material.

   c. The time and area of disturbance of a stream shall be kept to a minimum. The stream, including bed and banks, shall be re-stabilized as soon as possible and ideally within 72 hours after channel disturbance is completed or interrupted.

6. Soil erosion and sediment control measures shall be appropriate with regard to the amount of tributary drainage area as follows:

   a. Disturbed areas draining greater than 1,000 square feet but less than one acre shall, at a minimum, be protected by a sediment barrier to control all off-site runoff. Sediment barriers may include silt fences meeting the applicable sections of the AASHTO Standard Specification M288 or ASTM Standard Specifications D6461 and D6462 or sediment tubes or other measures providing equivalent sediment control as demonstrated by ASTM D7351.

   b. Disturbed areas draining more than one but fewer than five acres shall, at a minimum, be protected by a sediment trap with baffles or equivalent control measure at a point down slope of the disturbed area. Sediment traps shall be sized based on 1,800 cubic feet per acre of contributing area unless the site drains to an impaired waterbody which then requires 3,600 cubic feet per acre.

   c. Disturbed areas draining more than 5 acres shall, at a minimum, be protected by a sediment basin with baffles and a surface outlet such as a skimmer, flashboard riser, or approved equal. For construction periods exceeding one year, the one-year sediment load and a sediment removal schedule shall be submitted. If the detention basin for the proposed development condition of the site is used for sediment basin, the above requirements will be explicitly met until the final site stabilization is complete.

   d. For sites draining greater than five acres, soil erosion and sediment control measures shall, at a minimum, achieve an equivalent removal efficiency of 80 percent for suspended solids or 0.5 ML/L peak settleable solids concentration, whichever is less. The efficiency shall be calculated for disturbed conditions for the 10-year 24-hour design event.

   e. For sites draining more than 5 acres, release rates for the 2-year and 10-year, 24-hour storm events during construction shall be less than the pre-developed discharge rates.

7. All drainage features that are or will be functioning during construction shall be protected by appropriate sediment control measure.

8. If dewatering services are used, adjoining properties and discharge locations shall be protected from erosion. Discharges shall be routed through an effective sediment control measure (e.g., sediment trap, sediment basin or other appropriate measure).

9. All temporary soil erosion and sediment control measures shall be removed within 30 days after final site stabilization is achieved or after the temporary measures are no longer needed. Trapped sediment shall be properly disposed.

10. A stabilized construction entrance consisting of aggregate underlain with nonwoven geotextile (or other appropriate measure) shall be located at any point where traffic will be

entering or leaving a construction site to or from a public right-of-way, street, alley or parking area. Any sediment or soil reaching an improved public right-of-way, street, alley or parking area shall be removed by sweeping or vacuuming as accumulations warrant and transported to a controlled sediment disposal area. The Administrator or designee may require additional stabilized construction entrance methods.

11. Earthen embankments shall be constructed with appropriate stabilization and side slopes no steeper than 3H:1V. Steeper slopes may be constructed with appropriate stabilization as approved by the Administrator or designee.

12. Stormwater conveyance channels, including ditches, swales, and diversions, and the outlet of all channels and pipes shall be designed and constructed to withstand, at a minimum, the expected flow velocity from the 25-year frequency storm with minimal erosion. All constructed or modified channels shall be stabilized as soon as possible and no longer than 72 hours from disturbance.

13. Temporary diversions shall be constructed as needed during construction to protect areas from upslope runoff and/or to divert sediment laden water to appropriate traps or stable outlets.

14. Soil stockpiles shall not be located in a flood prone area or a designated buffer protecting waters of the United States or waters of the state. Soil stockpiles are defined as having greater than 100 cubic yards of soil and will remain in place for more than seven days. Soil stockpile locations shall be shown on the soil erosion and sediment control plan and shall have the appropriate measures installed at all times to prevent erosion of the stockpile.

15. Handbooks. Standards and specifications contained in The SCDHEC stormwater management BMP field manual and the stormwater technical reference manual, as amended, are referenced in this article as guidance for presenting soil erosion and sediment control plan specifications and delineating procedures and methods of operation under site development for soil erosion and sediment control. In the event of conflict between provisions of said manuals and this article, the stricter shall govern.

16. The applicant shall provide adequate receptacles for the deposition of all construction material debris generated during the development process. The applicant shall not cause or permit the dumping, depositing, dropping, throwing, discarding or leaving of construction material debris upon or into any development site, channel, waters of the United States or waters of the state.

17. Soil erosion and sediment control measures and stormwater management systems shall be functional before construction begins. Where development of a site is to proceed in phases, the soil erosion and sediment control measures and the stormwater management systems needed for each phase shall be functional before the construction of that phase begins.

C. EROSION CONTROL INSPECTION PROGRAM STANDARDS

1. Inspections must be conducted on all sites greater than one acre by qualified personnel as defined by SCDHEC.

2. An independent, third party erosion control inspector, hired by the applicant, is required for all development that exceeds ten acres of hydrologic disturbance or exceeds one acre of hydrologic disturbance and has a regulatory floodplain, waters of the United States or waters of the state on-site or on adjoining property.

3. The applicant shall submit the name of the erosion control inspector to the Administrator or designee at or before the pre-construction meeting or commencement of disturbance for the development.

4. The Administrator or designee shall be notified of a permanent change in the erosion control inspector within 14 days of the change.

8.4.2 MINOR STORMWATER PERMIT

In addition to the above requirements, the following requirements shall apply, at a minimum, for all development requiring a minor stormwater permit:

A. APPLICATION REQUIREMENTS

1. A minor stormwater permit and plans must be prepared, signed, and sealed by a professional engineer, Tier B land surveyor, or landscape architect. All licensees must be of the state.
2. A completed minor stormwater permit application signed by the applicant.
3. A report to include:
   a. An area drainage plan locating the proposed development in the watershed.
   b. An exhibit for review which displays all deed or plat restrictions of record or to be recorded for the stormwater management system.
   c. A general description of the proposed low impact development (LID) or water quality features.
   d. Calculations verifying that the proposed LID or water quality feature meets the treatment requirements as specified in the article.
   e. Drainage map identifying contributing areas to each LID or water quality device.
   f. Calculations verifying that the LID or water quality device has the appropriate total flow rate for which the associated pipe network has been designed. Total flow rate includes treated flow and bypass flow.
   g. Fully executed maintenance agreement and plan for stormwater facilities.
   h. Supporting documentation for method used to meet 50-percent hydrocarbon removal.
4. Minor stormwater permit plans shall show, at a minimum:
   a. A survey grade topographic map of the existing conditions of the development site showing the location of all roads, all drainage ways, the boundaries of predominate soil types, the boundaries of predominate vegetation, and the location of any drainage easements, detention or retention basins, including their inflow and outflow structures, if any. The map shall also include the location, size, and flow line elevations of all existing storm and other utility lines within the site. The map shall be prepared using a two-foot or less contour interval and shall be prepared at an appropriate scale for the type of project and shall include specifications and dimensions of any proposed stream channel modifications, location and orientation of cross-sections, if any, north arrow, and a graphic or numerical scale.
   b. The location and details of proposed LID and water quality devices.
5. Other items as specified on the application form.

B. PERFORMANCE STANDARDS

Water quality treatment is typically required for minor stormwater permits.

1. Water quality treatment is required when either:

a. The proposed development has a total impervious surface area ratio of 60 percent or greater and disturbs 50 percent or more of the parcel or larger common plan over a five year period; or

b. The proposed development creates a new impervious surface greater than or equal to 0.25 acres.

2. For those developments requiring water quality treatment, the following shall be met:

a. Water quality treatment shall be provided prior to discharging to waters of the United States or adjoining properties.

b. For developments disturbing 50 percent or more of the parcel, the water quality volume referenced below shall be over the entire parcel.

c. For developments disturbing 50 percent or more of the larger common plan over a five year period, the water quality volume referenced below shall be over the entire larger common plan.

d. For those developments adding more than 0.25 acres of new impervious, the water quality referenced below shall be over the entire disturbed area.

e. For dry detention, water quality treatment shall be provided for a volume equal to the first inch over the required treatment area as specified above with a release rate over a 24-hour period.

f. For alternate water quality methods (i.e., mechanical water quality), water quality treatment shall be provided for a volume equal to the first inch over the required treatment area as specified above.

g. For wet detention, water quality treatment shall be provided for a volume equal to 0.5 inches of runoff over the required treatment area as specified above with a release rate over a 24-hour period. A littoral zone shall be established for water quality treatment to enhance treatment effectiveness.

h. For permanent infiltration trenches, water quality treatment shall be provided for a volume equal to the first inch of runoff from all impervious surfaces. Infiltration trenches shall be designed to completely drain of water within 72 hours. Soil must have adequate permeability to allow water to infiltrate; infiltration practices are limited to soils having an infiltration rate of at least 0.30 inches per hour.

i. For those sites using alternate water quality methods that treat water quality based on a flow rate, the treated flow rate shall be determined using the method for computing peak discharge for a water quality storm (adapted from Clayton and Schueler, 1996). This methodology relies on the volume of runoff computed using the Small Storm Hydrology Method (Pitt, 1994) and utilizes the NRCS, TR-55 Graphical Peak Discharge Method (USDA, 1986). A sample methodology is presented in the stormwater technical reference manual.

j. Hydrocarbon (e.g., oil and grease) removal technology shall be required for all areas accepting flow from parking/loading areas, and vehicle drive surfaces (e.g., roadways and driveways). The volume for hydrocarbon removal shall be based on 0.5 inch over the impervious surfaces described above to each treatment device. The hydrocarbon removal rate shall be a minimum 50 percent.

k. Waters of the state and waters of the U.S. shall not be used for permanent or temporary placement of water quality treatment devices.

3. Hydrocarbon (e.g., oil and grease) removal technology shall be required for the water quality volume or flow rate calculated above. Hydrocarbon removal rate shall be a minimum 50

percent. Hydrocarbon removal shall only be required for impervious surfaces drainage to each treatment device.

4. For wet detention, water quality shall be provided for a volume equal to 0.5 inches of runoff. A littoral zone shall be established for water quality treatment to enhance treatment effectiveness.

5. Waters of the state and waters of the United States shall not be used for permanent or temporary placement of water quality treatment devices.

8.4.3 MAJOR STORMWATER PERMIT

In addition to the above requirements, the following requirements shall apply at a minimum for all development requiring a major stormwater permit:

A. APPLICATION REQUIREMENTS

1. A major stormwater permit and plans must be prepared, signed, and sealed by a professional engineer registered in the state of South Carolina.

2. A report to include:

   a. Discharge rate summary tables.

   b. Pre-development and post-development summary tables to include curve numbers and impervious areas.

   c. A pre-development drainage area map to include north arrow, graphical and numerical scale, the location of all existing conditions, contours, all drainage ways, flow arrows, watersheds, subwatersheds, runoff characteristic of each, curve number, time of concentration flow path, current aerial photography. The map shall be prepared at an appropriate legible scale for the type of project.

   d. A post-development drainage area map to include north arrow, graphical and numerical scale, the location of all existing conditions, contours, all drainage ways, flow arrows, watersheds, subwatersheds, runoff characteristic of each, curve number, time of concentration flow path, current aerial photography. The map shall be prepared at an appropriate legible scale for the type of project.

   e. A report describing the hydrologic and hydraulic analysis performed for the project. The report shall include the name of stream or body of water affected, a jurisdictional determination approved by the U.S. Army Corps of Engineers, a statement of purpose of proposed activity, and a detailed determination of the runoff for the project site under existing and developed conditions. This includes documentation of the design volumes and rates of the proposed runoff for each portion of the watershed tributary to the stormwater management system and receiving channel and high water elevations. Runoff calculations shall include all discharges entering the site from upstream areas.

   f. For detention facilities, a section in the hydrologic and hydraulic analysis report that includes a plot or tabulation of storage volumes and water surface areas with corresponding water surface elevations, stage-discharge or outlet rating curves, and design hydrographs of inflow and outflow for the 2-year, 10-year, 25-year and 100-year, 24-hour storm events under existing and developed conditions.

   g. A copy of a South Carolina dam safety permit or a letter stating that a dam safety permit is not required if the development includes a dam.

3. Major stormwater permit plans shall show, at a minimum:

   Cross-section details for the stormwater management facility showing existing and proposed conditions including principal dimensions of the work, and existing and proposed elevations,

normal water and calculated base flood elevations, and overland flow depth and path. The elevations of lowest floor or lowest adjacent grade for structures shall be included on the development plan as applicable.

4. The applicant may be required by the Administrator to provide a performance bond or sureties or other such adequate security satisfactory to the Administrator in an amount deemed sufficient by the Administrator to cover all costs of the stormwater management system as minimally necessary to properly manage stormwater and establish permanent stabilization measures as required by the stormwater permit. If such performance bond or sureties or other such adequate security is required, the amount shall be equal to 100 percent for a traditional bond and up to 125 percent for other acceptable sureties or other adequate security. The amount shall be based on the estimated cost to complete construction of the stormwater management system and establish permanent stabilization measures. The estimated probable cost shall be approved by the Administrator. Sureties and bonds shall not be duplicated in relation to other bonds or sureties for the same project for the same work. Also, the total surety or bond may be reduced as work is completed and accepted by the Administrator.

5. The bond shall be in place prior to permit issuance and in place until the permit is closed out.

6. Upon completion of development, as-builts shall be provided for the detention system by the engineer of record. As-builts must be prepared by a land surveyor licensed in the state of South Carolina. Horizontal survey datum control shall be based upon, and referenced to, South Carolina State Plane, NAD83 HARN, International Feet coordinates. Vertical survey datum control shall be based upon, and referenced to, the North American Vertical Datum of 1988 (NAVD 88). As-builts shall include calculations showing the as-built volume of compensatory and site-runoff storage as well as the northing and easting of the stormwater discharge from the site. The engineer of record shall submit a statement certifying that the detention system was built per plans. If the detention basin deviates from the approved plans, the engineer of record shall provide updated design calculations.

B. PERFORMANCE STANDARDS

Detention is typically required for major stormwater permits.

1. Water quantity is required when the development creates more than 0.25 acres of new impervious surfaces.

2. For those developments requiring water quantity, the following requirements shall be met:

   a. Runoff calculations, release rates and discharges.

      i. Design runoff rates shall be calculated using a volume-based hydrograph, such as HEC-1, Hydraflow Hydrographs, etc.

      ii. Rainfall data as presented in the SCDHEC "Stormwater Management BMP Handbook" shall be used for rainfall volume, storm distribution, return frequency and event duration.

      iii. The detention volume required shall be calculated using a 24-hour storm event and release rates shall not exceed the 2-year, 10-year, and 25-year pre-development release rates unless more intense storms are required by the Administrator.

      iv. Adopted basin plans and floodplain studies may be the basis for more specific regulations. These additional or more specific regulations will apply only in the specific study area of the basin plan or floodplain study and supersede those of this article only upon amendment to the stormwater ordinance and formal adoption of the basin plan or floodplain study by the County.

v. Extreme flood and public safety protection shall be provided by controlling and safely conveying the 100-year, 24-hour storm event such that flood velocities are not exacerbated and flood elevations are not increased to cause damage on adjacent properties.

vi. The design of stormwater management systems shall not result in the inter-basin transfer of drainage, unless no reasonable alternative exists. The Administrator or designee may also allow inter-basin transfers if the transfer relieves a known drainage hazard and there is adequate downstream stormwater capacity. In the event of an inter-basin transfer of drainage, detention shall be provided for 2-year, 10-year, 25-year and 100-year, 24-hour storm events.

vii. For determination of soil runoff characteristics, areas of the development that are disturbed and compacted shall be changed to that soil types' next highest runoff potential/soil group classification. Conversely, soil groups that are not disturbed will retain their current runoff characteristics.

viii. All concentrated stormwater discharges must be conveyed into an existing drainage outfall, including, but not limited to, pipes and ditches. No new discharges are permitted onto adjacent properties where there was not a discharge point previously, unless a recorded document is received in which the impacted property owner provides permission for such discharge. When the proposed stormwater discharge is near a property line where there is no existing outfall, a level spreader or equal is to be provided in addition to the outfall being situated 20 feet from the property line.

ix. Existing depressional storage volume shall be accounted for when determining the pre-developed runoff from each site. The function of any existing depressional storage shall be hydrologically modeled to determine the existing volume of storage and runoff reduction characteristics. The depressional storage shall be modeled as a pond whose outlet is a weir at an elevation where stormwater currently overflows the depressional storage area. Post-developed release rate for sites with depressional storage shall be for the 2-year, 10-year, and 25-year, 24-hour storm events.

b. Detention and retention facilities.

i. All stormwater facilities, when determined applicable by the Administrator or designee, shall be provided with:

- An emergency overflow structure capable of passing the 100-year, 24-hour storm event without damages to downstream structures or property.
- The top of the impounding structure shall be a minimum of 1 foot above the 100-year, 24-hour storm event peak stage.
- Features to facilitate maintenance and emergency ingress and egress capability.

ii. Outlet pipe and orifice diameter shall be designed to prevent clogging and in compliance with the stormwater technical reference manual.

iii. Stormwater infiltration, retention and detention facilities required to meet a development's discharge requirements shall be designed to by-pass off-site tributary flow from streams and channels unless approved by the Administrator or designee.

iv. Low impact development measures, bioretention cells, infiltration, and other post-construction practices should be installed only after the drainage area to these practices has been stabilized unless approved by the Administrator or designee.

v. Any development involving the construction, modification or removal of a dam shall obtain from the South Carolina Department of Health and Environmental Control a dam safety permit or a letter stating no permit is required. Any permit from the U.S. Army Corps of Engineers is required prior to the start of such activity.

vi. Stormwater retention and detention facilities shall not be constructed in a regulatory floodplain unless approved by the Administrator or designee. If a retention or detention facility is constructed in a regulatory floodplain, it shall meet the special management area requirements of this article. The volume of detention storage required to meet the release rate requirements shall be in addition to the floodplain compensatory storage required for the development.

vii. Safety ledges must be constructed on the slopes of all wet detention with a permanent pool greater than three feet deep. Two ledges must be constructed, each four to 6 feet in width. The first or upper ledge must be located between 1½ feet above the permanent pool level. The second or lower ledge must be located approximately 2.5 feet below the permanent pool level. Alternative safety designs shall be considered by the Administrator but the littoral zone requirements shall be met at a minimum.

viii. Underground detention systems must provide the necessary volume through the design life of the structure. A typical design life is recognized as 50 years. The system is to account for lost volume due to sedimentation. The underground detention system is to be designed based on the number of total suspended solids (TSS) that will accumulate in the system over a 50-year design life.

ix. Impounding berms or walls for stormwater retention and detention facilities shall be designed and constructed to withstand all expected forces, including, but not limited to, erosion, pressure and uplift. The applicant shall submit material and compaction design specifications for earthen impoundments and provide as-built information verifying that the constructed condition meets the design requirements. Impounding berms or walls shall be represented on the design plans and signed and sealed by a professional engineer with competency in this area.

x. All detention systems shall be located and described within a deed or plat restriction. Detention systems that service a single parcel of property may be excused from this requirement upon approval of the Administrator or designee. Modifications to a deed or plat restriction for the detention system shall be approved by the Administrator or designee.

8.5 SEDIMENT AND EROSION CONTROL PERMITS OUTSIDE THE COUNTY'S REGULATED MS4

All development inside the County prior to November 1, 2017 and all development outside the County's regulated MS4 shall meet the minimum of the requirements outlined in 8.4 or SCDHEC as outlined under the South Carolina Sediment and Erosion Control Act. SCDHEC will be the permitting authority for land disturbance in these areas. An approved N.O.I issued from SCDHEC is required prior to the issuance of permits from Lancaster County.

8.6 ENVIRONMENTALLY SENSITIVE LANDS

8.6.1 WETLAND PROVISIONS

All impacts to jurisdictional waters of the U.S. and waters of the state must be permitted in compliance with all federal and state standards.

A. WETLAND PERFORMANCE STANDARDS

1. The following hierarchy will be observed by all applicants:
   a. The proposed project will avoid adverse impacts to the greatest extent possible based on consideration of hydrologic conditions, existing topography, vegetation and human activity as it relates to stormwater management.
   b. The proposed project will minimize the adverse impacts to the greatest extent possible based on consideration of hydrology conditions, water quality, existing topography, vegetation, and human activity as it relates to stormwater management.
2. Wetlands may not be used for on-site stormwater detention and/or water quality.

B. SUBMITTAL REQUIREMENTS

1. The applicant shall delineate all wetland area boundaries in accordance with the current federal wetland determination methodology on the plans.
2. All federal and state permitting documents relating to wetlands shall be provided to the County along with all permits issued.
3. All federal and state wetland monitoring reports shall be provided to the County.

C. RESTRICTIONS

Preservation of wetlands shall be provided by deed or plat restrictions.

8.6.2 RIPARIAN ENVIRONMENT AND STREAM PROVISIONS

Stream systems are comprised of both the stream channel conveyance and the riparian environment adjacent to the conveyance channel. Stream systems shall be preserved to the greatest extent possible.

A. RIPARIAN ENVIRONMENTS

1. Riparian environments should be protected to maintain their functions as follows:
   a. Reduce flood flow rates, velocities, and volumes.
   b. Prevent erosion and promotes bank stability of streams, lakes, ponds, or wetland shorelines.
   c. Control sediment from upland areas thus reducing the impact of urbanization on stream habitat and water quality by filtering and assimilating nutrients discharged from surrounding uplands.
   d. Insulate and moderate daily and seasonal stream temperature fluctuations by maintaining cooler in stream temperatures for areas with overhanging vegetation.
   e. Serve as important sites for de-nitrification, which reduces development of algal blooms and subsequent depressed levels of dissolved oxygen in-stream.
   f. Provide an effective mechanism for treatment of contaminated surface runoff.
   g. Provide habitat corridors for both aquatic and terrestrial fauna and flora.
   h. Provide recreational and aesthetics values for human use.

2. Any applicant proposing development in a riparian environment shall identify the boundaries as the vegetative areas along waterways within the limits of the regulatory floodplain.

3. Tree-cutting and vegetation removal shall be minimized within riparian environments, and native revegetation of disturbed areas shall take place as soon as possible. Avoidance and minimization is not necessary for removal of invasive or problematic species.

4. To the extent practicable, development in a riparian environment shall not, without mitigation:

   a. Adversely change the quantity, quality, or temporal and areal distribution of flows entering any adjacent wetlands or waters;

   b. Destroy or damage vegetation (unless part of a plan for removing non-native, invasive species) that overhangs, stabilizes, provides overland flow filtration, or shades stream channels, wetlands, or impoundments that normally contain water; nor

   c. Adversely affect any groundwater infiltration functions.

5. The length of any mitigated riparian environment shall be equal to or greater than the length of the disturbed area.

6. Mitigation requirements for riparian environments shall meet the wetland mitigation requirements of this article.

B. STREAM CHANNEL CONVEYANCE

1. Clearing of channel vegetation shall be limited to that which is essential for construction of the channel.

2. If a stream meeting the definition of waters of the United States or water of the state is modified, an approved permit from the U.S. Army Corps of Engineers, in addition to a stream mitigation plan, shall be submitted for review and approval to the Administrator or designee. The plan shall show how the physical characteristics of the modified channel meet the existing channel length, cross-section, slope, sinuosity and carrying capacity of the original channel. The plan shall also provide specifications and details necessary to effectively re-establish vegetation within the stream channel modification. Native plants shall be used as the permanent vegetation in a re-vegetation plan.

3. All disturbed areas associated with a stream modification shall be seeded or otherwise stabilized immediately according to the requirements of this article.

4. An approved and effective means to reduce sedimentation and degradation of downstream water quality must be installed before excavation begins and must be maintained throughout construction until final stabilization is achieved.

5. New or relocated stream channels shall be built in the dry and all elements of construction, including vegetation, shall be completed prior to diversion of water into the new channel.

6. Streams channels shall be expected to withstand all storm events up to the base flood without increased erosion. The armoring of banks using bulkheads, rip-rap and other materials shall be avoided. Structural armoring shall only be used where erosion cannot be prevented in any other way. Preference shall be given to bio-engineering methods of stabilization. Armoring shall have minimal impact on other properties, and the existing land configuration.

7. Construction vehicles shall cross streams by the means of existing bridges or culverts. Where an existing crossing is not available, a temporary crossing shall be constructed in conformance with the following:

a. Water quality is maintained.

b. The approach roads will be 0.5 foot or less above natural grade within the 100 year floodplain.

c. The crossing will allow stream flow to pass without backing up the water above the streambank vegetation line or above any drainage tile or outfall.

d. Only elevated stream crossings will be permitted. No disturbance below the ordinary high water mark is permitted.

e. All disturbed streambanks will be seeded or otherwise stabilized as soon as possible in accordance with the provisions of this article upon installation and again upon removal of construction crossings.

f. The access road and temporary crossings will be removed within ninety (90) days after installation, unless an extension of time is granted by the Administrator or designee.

8.6.3 BUFFER AREAS

Undisturbed buffer areas shall be required for all waters of the United States or stream classified as waters of the state. Buffer areas are divided into two types, linear buffers and water body buffers.

A. The terms "waters of the United States" and "waters of the state" are defined in Chapter 10 and refer to areas that are under the jurisdictional authority and regulated by the U.S. Army Corps of Engineers or the South Carolina department of health and environmental control, respectively.

1. Linear buffers shall be designated along both sides of all channels meeting the definition of waters of the United States or waters of the state. The buffer width shall be determined as follows:

a. When the channel has a watershed greater than 20 acres but less than one square mile, the minimum buffer shall be 30 feet on each side of the channel.

b. When the channel has a watershed greater than one square mile, the minimum buffer shall be 50 feet on each side of the channel.

2. Water body buffers shall encompass all nonlinear bodies of water meeting the definition of either waters of the United States or waters of the state. The buffer width shall be determined as follows:

a. For all water bodies or wetlands with a total surface area greater than one-tenth acre but less than one acre, a minimum buffer width of 30 feet shall be established.

b. For all water bodies or wetlands with a total surface area greater than or equal to one acre but less than 2.5 acres, a minimum buffer width of 40 feet shall be established.

c. For all water bodies or wetlands with a total surface area greater than or equal to 2.5 acres, a minimum buffer width of 50 feet shall be established.

3. Buffers along the Catawba River and Lynches River shall be 100 feet in width as measured from the top of bank.

B. In areas where state or federal threatened and endangered species are present in streams or wetland areas, buffer widths shall be a minimum of 100 feet except when a more stringent buffer is required in other sections of this ordinance. Buffer areas for water bodies meeting the definition of waters of the United States or waters of the state shall extend from the ordinary high water mark. Buffer areas for wetlands shall extend from the edge of the delineated wetland. A property may contain a buffer area that originates from waters of the United States or waters of the state on another property.

C. Features of the stormwater management system approved by the Administrator or designee may be within the buffer area of a development.

D. Access through buffer areas shall be provided, when necessary, for maintenance purposes.

E. All roadside drainage ditches, existing excavated detention facilities, existing borrow pits, existing quarries and improvements to existing public road or trail developments or alignments are exempt from buffer requirements.

F. Stormwater discharges that enter a buffer shall have appropriate energy dissipation measures to prevent erosion and scour.

G. All buffer areas shall be maintained as in-situ vegetation and free from development, including disturbance of the soil, dumping or filling, erection of structures and placement of impervious surfaces, except as follows:

1. A buffer area may be used for passive recreation (e.g., bird watching, walking, jogging, bicycling, horseback riding and picnicking) and it may contain pedestrian, bicycle or equestrian trails.
2. Structures and impervious surfaces (including trails, paths) may occupy a maximum of 20 percent of the buffer surface area provided the runoff from such facilities is diverted away from the waters of the United States or waters of the state or such runoff is directed to enter the buffer area as non-concentrated flow.
3. Utility maintenance and construction of utility facilities, as approved by the County and appropriate jurisdictional agencies, shall be allowed.
4. Buffer areas disturbed by allowing construction or as part of a re-vegetation plan shall be re-vegetated using native vegetation.
5. Removal of invasive species.

H. Construction buffers from the limits of the waters of the United States or waters of the state shall be required per SCDHEC requirements. The temporary construction buffer shall be marked by construction fencing and installed prior to the start of all other construction activities. All other construction activities, including soil erosion and sediment control features, shall take place on the non-wetland side of the construction fencing.

I. Buffer averaging. The buffer width for a development site may be varied to a minimum of one-half of the buffer width required, upon approval of the Administrator or designee, provided that the total buffer area required is achieved adjacent to the waters of the United States or waters of the state being buffered.

J. Preservation of buffer areas shall be provided by deed or plat restrictions.

K. The buffer area of a development site may be excluded in the determination of the water quality volume requirement.

8.7 STORMWATER CONVEYANCE SYSTEMS

8.7.1 STORM SEWERS AND SWALES

A. The 25-year design storm (Rational Method) shall be used as a minimum for the design of storm sewers, swales and appurtenances. All runoff designed to be detained shall be conveyed to the detention facility for all storms up to the 25-year design storm event (Rational Method). The Administrator reserves the right to require conveyance of greater storm events when provisions are not included in the design to convey larger storm to permanent BMP's. Conveyance may be a combination of overland, channelized and pipe flow. Overland flow areas shall be stabilized to

withstand anticipated velocities. Storm sewer design analysis shall be calculated under full flow conditions, unless prior approval from the Administrator or designee is received for an alternate flow condition (e.g., pressure flow).

B. For major arterial and multi-lane collector roadways, the storm sewer shall be designed to contain and convey the peak runoff from the 50-year design storm (Rational Method). For minor roads and residential streets, the storm sewer shall be designed to contain and convey the peak runoff from the 25-year design storm (Rational Method). Rerouted off-site drainage shall be designed to contain and convey the peak runoff from the 50-year design storm (Rational Method). In no case shall storm sewers within the public right-of-way have an internal diameter less than 18 inches unless otherwise approved by the Administrator or designee.

C. Development shall not connect to sanitary sewers as an outflow for the stormwater management system.

D. All storm sewers not located in a public road right-of-way shall provide an easement of sufficient width for the maintenance or re-construction of the storm sewer. The easement is to be dedicated to the homeowners' association, property manager, or entity responsible for maintenance with provisions for access by Lancaster County to access and make repairs.

E. All stormwater conveyance systems shall be designed and constructed to withstand the anticipated velocity from the 25-year design storm event with minimal erosion.

F. Stabilization adequate to prevent erosion for the 25-year design storm event shall be provided at the outlets for all pipes and channel transitions except for detention outlet pipes which shall withstand the 50-year design storm event without erosion.

G. Swales being used as part of the stormwater management system for a development shall be located within a deed or plat restricted area of sufficient size to maintain or reconstruct the swale.

H. Surface outflows onto adjoining properties shall be designed to release as sheet flow using level spreader trenches, or equivalent, unless alternative designs are approved by the Administrator or designee.

I. At the completion of storm sewer installation and prior to project closeout, the owner shall provide the County with an as-built location of the system and outfalls to any receiving waterways. Horizontal survey datum control shall be based upon, and referenced to, South Carolina State Plane, NAD83 HARN, International Feet coordinates. Vertical survey datum control shall be based upon, and referenced to, the North American Vertical Datum of 1988 (NAVD 88).

8.7.2 OVERLAND FLOW PATHS

The following items are general performance standards for overland flow paths and do not excuse development from meeting all other requirements of this article:

A. ON-SITE TRIBUTARY DRAINAGE AREAS

1. The overland flow paths shall be protected from any activity, such as fencing, landscaping, or storage shed placement, which could impair its function.

2. All areas of development requiring stormwater permits must be provided with an overland flow path to the detention pond or stabilized discharge point that will pass the base flood flow without damage to structures or property.

3. For overland flow paths with less than 40 acres tributary drainage area, all structures in parcels containing or adjacent to an overland flow path or other high water level designation shall have a lowest adjacent grade a minimum of one foot above the design high water elevation.

B. OFF-SITE TRIBUTARY DRAINAGE AREAS

1. All areas of development requiring a stormwater permit must be provided with an overland flow path for off-site tributary drainage areas through the proposed development that will pass the base flood flow without damage to structures or property.
2. A deed or plat restriction shall be established for the flow paths conveying off-site tributary areas. The overland flow paths shall be protected from any activity, such as fencing, landscaping, or storage shed placement, which could impair its function.

C. FLOW RATE

The flow rate for a base flood shall be used to establish overland flow path limits, and it shall include all on-site and off-site tributary areas, runoff calculations, release rates and discharges.

D. OVERLAND FLOW PATHS

Overland flow paths with greater than 40 acres tributary drainage area are considered to be flood prone areas and are subject to the regulatory floodplain and regulatory floodway requirements

8.8 WAIVERS AND APPEALS

8.8.1 WAIVERS

For soil erosion and sediment control and stormwater conveyance system provisions, the Administrator or designee, upon application, may grant a waiver to these provisions as will not cause detriment to the public good, safety, or welfare, nor be contrary to the spirit, purpose, and intent of this article where, by reason of unique and exceptional physical circumstances or condition of a particular property, the literal enforcement of the provisions of this article would result in an unreasonable hardship. The conditions for granting a waiver shall be the same as those enumerated above for a variance.

8.8.2 APPEALS

Appeals to the decision of the Administrator or his designee as it relates to waivers shall be appealed to the Planning Commission as detailed in the variance process. A person having a substantial interest affected by a decision of the Planning Commission may appeal the decision to the circuit court of Lancaster County by filing with the clerk of the court a petition setting forth plainly, fully, and distinctly why the decision is contrary to law. The appeal shall be filed within 30 days after the written decision of the County Council is issued.

8.9 ACCESS AND INSPECTION

8.9.1 ACCESS

Representatives of the County and of any federal and state unit of government with regulatory authority are authorized to enter upon any land or water to inspect development activity, to verify the existing conditions of a development site that is currently under permit review, and to verify compliance with this article whenever the County deems necessary.

8.9.2 INSPECTION

Lancaster County adopts the inspections subsection of the most current SCDHEC construction general permit with amendments listed below:

A. If at any stage of the grading of any development site the Administrator or designee determines that the nature of the site is such that further work authorized by an existing permit is likely to imperil any property, public way, stream, lake, wetland, or drainage structure, the Administrator or designee may require, as a condition of allowing the work to be done, that such reasonable

special precautions be taken as is considered advisable to avoid the likelihood of such peril. Special precautions may include, but shall not be limited to, a more level exposed slope, construction of additional drainage facilities, berms, terracing, compaction, installation of plant materials for erosion control, and recommendations of a licensed soils engineer and/or engineering geologist which may be made requirements for further work.

B. Where the Administrator or designee determines that storm damage may result or has resulted during development, work may be stopped and the permittee required to install temporary structures or take such other measures as may be required to protect adjoining property or the public safety. The Administrator or designee may require that the operations be conducted in specific stages so as to ensure completion of protective measures or devices prior to the advent of seasonal rains.

8.10 ILLICIT DISCHARGES, CONNECTIONS, SPILLS, AND NUISANCES

8.10.1 PURPOSE AND INTENT

The purpose and intent of this section is to provide for the health, safety and general welfare of the citizens of Lancaster County through the regulation of non-stormwater discharges to the storm drainage system to the maximum extent practicable as required by federal and state law. This section establishes methods for controlling the introduction of pollutants into the municipal separate storm sewer system in order to comply with requirements of the National Pollutant Discharge Elimination System (NPDES) permit process. The objectives of this article are:

A. To regulate the contribution of pollutants to the municipal separate storm sewer system by stormwater discharges by any user;

B. To prohibit illicit connections and discharges to the municipal separate storm sewer system;

C. To establish legal authority to carry out all inspection, surveillance and monitoring procedures necessary to ensure compliance with this article.

8.10.2 ILLICIT DISCHARGES

No person shall discharge or cause to be discharged into the municipal storm drain system or watercourses any materials, including, but not limited to, pollutants or waters containing any pollutants that cause or contribute to a violation of applicable water quality standards, other than stormwater. Prohibited substances include, but are not limited to, oil, anti-freeze, chemicals, animal waste, paints, garbage, and litter. Dumping, depositing, dropping, throwing, discarding or leaving of litter, construction material debris, yard waste and all other illicit discharges into the stormwater management system are prohibited. Saltwater pools shall not be discharged to the stormwater management system. The commencement, conduct or continuance of any illegal discharge to the storm drain system is prohibited except as described as follows:

A. The following discharges are exempt from discharge prohibitions established by this article: water line flushing or other potable water sources, landscape irrigation or lawn watering, diverted stream flows, rising groundwater, groundwater infiltration to storm drains, uncontaminated pumped groundwater, foundation or footing drains (not including active groundwater dewatering systems), crawl space pumps, air-conditioning condensation, springs, noncommercial washing of vehicles, commercial carwashes that are in compliance with the NPDES general permit for vehicle wash water discharges, natural riparian habitat or wetland flows, swimming pools or fountain drains (dechlorinated, less than 0.01 parts per million chlorine), firefighting activities, street wash water, and any other water source not containing pollutants.

B. Discharges specified in writing by the authorized enforcement agency as being necessary to protect public health and safety.

C. Dye testing is an allowable discharge, but requires notification to the authorized enforcement agency prior to the time of the test.

D. The prohibition shall not apply to any non-stormwater discharge permitted under an NPDES permit, waiver, or waste discharge order issued to the discharger and administered under the authority of the Federal Environmental Protection Agency or SCDHEC, provided that the discharger is in full compliance with all requirements of the permit, waiver, or order and other applicable laws and regulations, and provided that written approval has been granted for any discharge to the storm drain system.

8.10.3 ILLICIT CONNECTIONS

Connections to a stormwater conveyance or stormwater conveyance system that allow the discharge of non-stormwater are unlawful. Prohibited connections include, but are not limited to: floor drains, wastewater from washing machines or sanitary sewers, and wastewater from septic systems. Where it is determined that said connection:

A. May result in the discharge of hazardous materials or may pose an immediate threat to health and safety, or is likely to result in immediate injury and harm to real or personal property, natural resources, wildlife, or habitat; or

B. Was made in violation of any applicable regulation or ordinance, other than this section; the Administrator or designee shall designate the time within which the connection shall be removed. In setting the time limit for compliance, the Administrator or designee shall take into consideration:

1. The quantity and complexity of the work,

2. The consequences of delay,

3. The potential harm to the environment, to the public health, and

4. The cost of remedying the damage.

8.10.4 SPILLS

Spills or leaks of polluting substances released, discharged to, or having the potential to be released or discharged to the stormwater conveyance system shall be contained, controlled, collected, and properly disposed. All affected areas shall be restored to their pre-existing condition. Persons in control of the polluting substances immediately prior to their release or discharge, and persons owning the property on which the substances were released or discharged, shall immediately notify the Lancaster County emergency management coordinator and the Public Works Department of the release or discharge, as well as making any required notifications under state and federal law. Notification shall not relieve any person of any expenses related to the restoration, loss, damage, or any other liability which may be incurred as a result of said spill or leak, nor shall such notification relieve any person from other liability which may be imposed by state or other law.

8.10.5 NUISANCES

Any condition caused or permitted to exist in violation of any of the provisions of this section is a threat to public health, safety, and welfare, and is declared and deemed a nuisance, and may be summarily abated or restored at the violator's expense, and/or a civil action to abate, enjoin, or otherwise compel the cessation of such nuisance may be taken.

8.11 STORMWATER MANAGEMENT UTILITY

8.11.1 COUNCIL FINDINGS

The county council has made the following findings:

A. The management and regulation of stormwater runoff and sediment is necessary to reduce pollution, siltation, sedimentation, local flooding and stream channel erosion, all of which impact adversely land and water resources and the health, safety, property and welfare of the residents of the county;

B. There is a system of stormwater management facilities, including, but not limited to, inlets, conduits, manholes, outlets, ponds, and certain drainage easements within the County's designated MS4;

C. The stormwater management facilities and components within the MS4 need to be regularly maintained, rehabilitated, upgraded and improved, and additional stormwater management facilities and measures will need to be installed throughout the county;

D. The county needs to upgrade its capability in order to maintain existing and future stormwater management facilities and measures;

E. All parcels of real property in the county, particularly those with improvements, both use or benefit from the stormwater management system and program. The improvement of existing facilities and construction of additional facilities in the system will directly or indirectly benefit the owners of all real property;

F. Continued growth in the county will contribute to the need for improvements in and maintenance and regulation of the stormwater management system;

G. The county can best manage and regulate the control of stormwater by a policy that regulates the use of real property, both private and public, and which takes reasoned, measured steps to involve the county in additional methods of participation and regulation;

H. Owners of real property shall finance the stormwater management system to the extent they, and the persons they permit to utilize their property, contribute to the need for the system. Therefore, fees or other charges shall bear a substantial relationship to the cost of the service;

I. It is in the best interests of the citizens of this county and, most specifically, the owners of real property, that a stormwater management utility and stormwater management utility fee system be established by ordinance and implemented as part of the county's utility special revenue fund, by whatever name designated.

8.11.2 STORMWATER MANAGEMENT UTILITY ESTABLISHED, ADMINISTRATION, POWERS, AND DUTIES

The county council hereby establishes a stormwater management utility within the designated MS4 to carry out the purposes, functions and responsibilities set forth in this article. The governing body of the stormwater management utility shall be the county council. The administrator shall administer the stormwater management utility through the public works department or such other departments and divisions as the county administrator shall designate. The stormwater management utility shall have the following powers and duties, which powers and duties are not necessarily exclusive to the stormwater management utility:

A. Stormwater management planning to include preparation of comprehensive watershed master plans for stormwater management.

B. Regular inspections and maintenance of public stormwater management facilities and measures for the construction thereof, as well as regular inspections of private stormwater management facilities.

C. Maintenance and improvements of stormwater management facilities that have been accepted by the county for purposes of stormwater management.

D. Plan review and inspection of sediment control and stormwater management plans, measures and practices.

E. Retrofitting designated watersheds to reduce existing flooding conditions or to improve water quality.

F. Acquisition of interests in land, including easements.

G. Design and construction of stormwater management facilities and measures and acquisition of equipment.

H. Water quantity and water quality management, including monitoring surveillance.

I. Any and all powers and duties delegated or granted to it as a local government implementing agency under the laws and regulations of the state and the ordinances of the county.

8.11.3 BOUNDARIES AND JURISDICTION

All real properties located in Lancaster County north of the following boundary: from a point at the western boundary with York County along Highway 5 until its intersection with Highway 521, then proceeding briefly in a southerly direction along Highway 521, then in a northeasterly direction until its intersection with the Union County, North Carolina state line, then further northward along the North Carolina state line, all as depicted and delineated on that map incorporated herein and identified as Exhibit A-4.

8.11.3.1 AMOUNT AND CLASSIFICATIONS OF FEES

A. Criteria for establishing fees.

The county council hereby establishes the amount and classifications of fees to be implemented to fund the storm water management utility and its programs and projects. In establishing such fees, the county council has considered, among other things, the following criteria:

1. The fee system must be reasonable and equitable so that users pay to the extent they contribute to the need for the storm water management utility, and so that fees or other charges bear a substantial relationship to the cost of service. The county council recognizes that these benefits, while substantial, in many cases cannot be measured directly.

2. The components of the calculations used to establish fees must include, but may not be limited to, the following cost factors, which may be associated with the resolution of storm water problems which the stormwater management utility shall seek to alleviate:

a. Storm water management planning and preparation of comprehensive watershed master plans for storm water management;

b. Regular inspection and maintenance of public stormwater management facilities and measures for the construction thereof, as well as regular inspections of private stormwater management facilities;

c. Maintenance and improvement of stormwater management facilities that have been accepted by the county for purposes of storm water management;

d. Plan review and inspection of sediment control and stormwater management plans, measures and practices;

e. Retrofitting designed watersheds to reduce existing flooding problems or to improve water quality;

f. Acquisition of interests in land, including easements;

g. Design and construction of stormwater management facilities and measures and acquisition of equipment;

h. Administration and enforcement;

i. Water quantity and water quality management, including monitoring surveillance; and

j. Debt service and financing costs.

3. The components of the calculations used to establish fees must be based on an equivalent residential unit (ERU), determined and approved by the county council, with reasonable general adjustments being made for, but not limited to, the following factors:

a. Commercial service and industrial land uses other than single-family residential;

b. Open and/or forested land;

c. The amount of site that is impervious; and

d. Other generally accepted factors relevant to such calculations based upon the provisions of this article.

4. The practical difficulties and limitations related to establishing, calculating and administering such fees should be addressed with due regard for fairness, efficiency, ease of comprehension, and ease of administration.

B. Fee structure. Stormwater management utility fees shall be fixed from time to time in the budget ordinance as approved by county council and are set forth in the fee schedule in the MSSD of the UDO. Fee categories are as follows:

1. Developed, single family residential property

2. Non-single family residential property, developed commercial property, developed industrial property.

8.11.4 DETERMINATION OF AMOUNT OF IMPERVIOUS AREA.

The administrator or designee will determine the amount of impervious area on each developed commercial/industrial property. A determination will be made using information derived from digital and other photographic data, as maintained by the administrator or designee, commonly designated as Geographic Information System (GIS) Data, and such additional information, if available, as may reliably supplement such data. Upon written request, an owner, or lawful occupant obligated to the owner for payment of the fee, shall be provided a written determination of the amount of impervious area for which a fee has been established.

A. Collection of fees.

1. Taxable property. The administrator or his designee shall prepare and forward all information necessary to the county tax collector or his designee for the purpose of an annual billing of the stormwater management utility fee. Notice of the fee shall be included on the property owner's notice of ad valorem real property taxes, and the fee shall be due and payable simultaneously with the taxes. By Resolution, the county council may authorize the county administrator to implement other reliable means of billing.

2. Nontaxable property. The county council recognizes that nontaxable as well as taxable properties generate stormwater runoff and benefit from the stormwater management system and that the principle of fairness dictates that such properties be charged. The administrator or his designee shall make arrangements for billing for nontaxable property in the same manner as taxable property. By Resolution, the county council may authorize the county administrator to implement other reliable means of billing.

3. Date of imposition of fee for developed properties. Developed properties shall become subject to the imposition of the stormwater management utility fee at the billing cycle following final approval of site development by the county.

B. Use of revenue; investment of funds; borrowing. Funds generated for the stormwater management utility from fees, bond issues, other borrowing and other sources shall be utilized only for those purposes for which the storm water management utility has been established, including, but not limited to, regulation, planning, acquisition of interests in land, including easements, design and construction of facilities, maintenance of the stormwater management system, billing and administration, and water quantity and water quality management, including monitoring, surveillance, private maintenance inspection, construction inspection and other activities which are reasonably required. Such funds shall be invested and reinvested pursuant to the same procedures and practices established by the county for investment and reinvestment of funds. The county council may use any form of borrowing authorized by law to fund capital acquisitions or expenditures for the storm water management utility. The county council, in its discretion and pursuant to standard budgetary procedures, may supplement such funds with amounts from the general fund.

C. Requests for reconsideration; appeals.

1. Request for reconsideration.

a. A property owner of record, or a lawful occupant obligated to the owner for payment of the fee, may request a reconsideration of any determination or interpretation by the administrator or designee in the operation of the storm water management utility. Such request must be in writing and filed with the administrator or designee, or such other person as the county administrator may designate, within 30 days of receipt of notification of the determination or interpretation.

b. The county shall review the application and make a decision on the request within 30 days of receipt of the request.

c. The request shall be made upon such forms and be accompanied by such information as the county, by written policy, shall require.

2. Appeals.

a. Persons who are authorized to make a request and who are aggrieved by a decision of the county under subsection 8.11.4(C)(1) shall have the right to appeal to the county administrator, or such person, committee or board as he may establish for such purpose.

b. The appeal shall be in writing and shall set forth, in detail, the grounds upon which relief is sought. The person designated to review such appeal shall provide a hearing on the appeal within 30 days of filing and render a decision within 60 days of filing.

c. The person designated to review such appeal shall have full authority to affirm, modify or reverse a decision being reviewed upon determining whether the decision was made in compliance with the standards, policies and criteria of this division.

3. Payment of fee required. No provision of this division allowing for a request for reconsideration or for an administrative appeal shall be deemed to suspend the due date of

the fee with payment in full. Any adjustment in the fee for the person pursuing a request for reconsideration or appeal shall be made by refund of the amount due.
(Ord. No. 2017-1455, 9.12.17)

9 ADMINISTRATION

9.1 REVIEW AGENCIES (Ord. No. 2019-1617, 11.12.19)

9.1.1 DESIGNATION OF ADMINISTRATOR

A. The various provisions of this ordinance shall be administered under the general direction of the County Administrator and under the specific direction of the Lancaster County Planning Department, Lancaster County Zoning Department, Lancaster County Public Works Department, Lancaster County Building Department, and the Fire Marshal. For the purposes of this ordinance, the Planning Director, the Zoning Official, the Public Services Director, the Building Official, Fire Marshal, and Public Safety Commission Director and their designees are collectively referred to as the Administrator. The Planning Department will serve as the "gatekeeper" for all development applications and will advise applicants on appropriate personnel to contact. Each responsible party designated as the Administrator will review and approve compliance with all Local, State, and Federal development regulations within their area of responsibility. As such, each designated party shall have the following general roles:

1. **Planning Director:** Review and approve compliance with land use, zoning, design and subdivisions standards, and review for compliance with the adopted Lancaster County Comprehensive Plan policies.
2. **Zoning Official:** Review and approve compliance with zoning, floodplain, and stormwater.
3. **Public Works Director:** Review of public services including streets and stormwater and approve compliance with the policies and standards in the Manual of Specifications, Standards, and Design (MSSD).
4. **Building Official:** Review and approve compliance with building codes certificates of occupancy.
5. **Fire Marshal:** Review of public services related to fire and approved compliance with the Fire Code, as amended.
6. **Public Safety Director:** Review and approve new road names and addressing and review name changes.

B. POWERS AND DUTIES

In addition to the powers and duties set forth for the Administrator elsewhere in this ordinance and in other laws and regulations of the County, the Administrator shall have the following specific powers and duties, to be carried out in accordance with the terms of this ordinance:

1. To enforce the provisions of this ordinance, unless otherwise specified.
2. To review all applications for land development for compliance with the terms of this ordinance.
3. To provide the Lancaster County Council, the Planning Commission, and the Board of Zoning Appeals (BZA) with reports and recommendations regarding matters before these bodies, either as required by this ordinance, other laws or regulations, or at the request of the body.
4. To maintain a record of all permits and approvals on file and to make copies available to interested parties.
5. To enact the corrective procedures outlined within this chapter for violations of this ordinance.

9.1.2 COUNTY COUNCIL

A. POWERS AND DUTIES

Lancaster County Council shall have the following powers and duties to be carried out in accordance with the terms of this ordinance.

1. To conduct any and all business in accordance with their Charter and South Carolina General Statutes.
2. To amend the Comprehensive Plan and other plans, as necessary.
3. UDO Decisions: The County Council shall render final decisions regarding the following permits types:
   a. Text Amendments
   b. Map Amendments/Rezoning
   c. Conditional Uses
   d. Mixed-Use Districts Master Development Plans
   e. Development Agreements

9.1.3 TECHNICAL REVIEW COMMITTEE

A. POWERS AND DUTIES

Lancaster County's Technical Review Committee (TRC) shall have the following powers and duties to be carried out in accordance with the terms of this ordinance.

1. To assist in the establishment of technical requirements for all applications, including: submission schedules, size and number of drawings, type of media, etc.
2. **UDO Review:** The Technical Review Committee shall serve as the reviewing entity for the following permit types:
   a. Site Plan
   b. Minor Subdivisions Preliminary Plats
   c. Major Subdivision Preliminary Plats
   d. Minor Subdivision Final Plat
   e. Major Subdivision Final Plat
   f. Mixed-Use Districts/Master Development Plans
   g. Development Agreements
3. **UDO Decisions:** The Technical Review Committee shall render final decisions regarding the following permits types:
   a. Minor Subdivisions Preliminary Plats
   b. Minor Subdivision Final Plat
   c. Major Subdivision Final Plat
   d. Site Plan
   e. All previously approved plats.

B. MEMBERSHIP

1. The Technical Review Committee shall be chaired by the Planning Department Director (or designee) and shall consist of members of technical staff and representatives of various County departments that include Zoning, Public Works, Building, Fire Marshal, Public Safety Director, and two outside agencies that include Lancaster County Water and Sewer and SCDOT.

2. Other representatives from the following departments and outside agencies may also serve as members of the Technical Review Committee upon request of the Committee Chair:

   a. Parks and Recreation

   b. Economic Development

   c. Lancaster County School District

   d. Lancaster County Natural Gas Authority

   e. SC Department of Health and Environmental Control (SCDHEC)

9.1.4 PLANNING COMMISSION

A. POWERS AND DUTIES

Lancaster County Planning Commission shall have the following powers and duties to be carried out in accordance with the terms of this ordinance.

1. To perform studies and surveys of the present conditions and probable future development of the County and its environs, including but not limited to, studies and surveys of land uses, population, traffic, parking, etc.

2. Study the resources and needs of the County and prepare maps and plans for the systematic future development and betterment of the County.

3. To formulate and recommend to the County Council the adoption and amendment of a Comprehensive Plan and other plans, as necessary.

4. **UDO Review:** The Planning Commission shall review and make recommendations regarding the following permit types:

   a. Text Amendments

   b. Map Amendments/Rezoning

   c. Conditional Uses

   d. Mixed-Use Districts/Master Development Plans

   e. Vested Rights

   f. Development Agreements

5. **UDO Decisions:** The Planning Commission shall render final decisions regarding the following permits types after proper referral and consideration of recommendations and requirements from appropriate Federal, State, and Local Agencies:

   a. Major Subdivision Preliminary Plats

   b. Street Name Changes

6. The Planning Commission shall also have any additional powers and duties as may be set forth in other laws and regulations or at the direction of the County Council.

B. MEMBERSHIP AND QUORUM

1. The Planning Commission shall consist of 7 members. A quorum shall consist of a simple majority of the current membership of the board. Vacant seats shall not be counted for the purpose of determining a quorum.
2. A member who has withdrawn from a meeting without being excused by a majority vote of the remaining members present shall be counted as present for the purpose of determining whether or not a quorum is present.
3. The Lancaster County Council shall appoint 7 members representing each Lancaster County Council District.
4. Vacancies occurring in the membership of the Planning Commission, other than through the expiration of terms, shall be filled for the unexpired term.
5. All members shall serve 4 year terms and may succeed themselves but may not serve more than 2 consecutive full terms.
6. Membership terms shall continue to be staggered so that the Planning Commission will always be served by experienced members.
7. A chairman, and other officers as determined by the Planning Commission, shall be elected in accordance with the adopted rules of procedure. The elected chairman shall preside over the Planning Commission. The term of chairman shall be one year, with eligibility for reelection.
8. All members of the Planning Commission shall have equal rights, privileges, and duties in all matters.

9.1.5 BOARD OF ZONING APPEALS

A. POWERS AND DUTIES

The Lancaster County Board of Zoning Appeals shall have the following powers and duties to be carried out in accordance with the terms of this ordinance:

1. To hear and decide appeals from any order, requirement, permit, decision, or determination issued by an administrative officer of the County in enforcing any provisions of this ordinance.
2. To interpret zoning maps and pass upon disputed questions of lot lines, district boundary lines, and similar questions as they arise in the administration of this ordinance.
3. **UDO Decisions:** The Board of Zoning Appeals shall render final decisions regarding the following permits types:
   a. Appeal of any Administrative Decisions
   b. Variances
4. The Board of Zoning Appeals shall also have any additional powers and duties as may be set forth for in other laws and regulations or at the direction of the County Council.

B. MEMBERSHIP AND QUORUM

1. The Lancaster County Board of Zoning Appeals shall consist of 7 members representing each Lancaster County Council District.
2. A member who has withdrawn from a meeting without being excused by a majority vote of the remaining members present shall be counted as present for the purpose of determining whether or not a quorum is present.

3. Vacancies occurring for reasons other than expiration of term shall be filled as they occur for the remainder of the unexpired term by the body making the original appointment.
4. All members of the Board shall have equal rights, privileges, and duties in all matters, regardless of whether the matters arise within the County or within the extraterritorial area.
5. All members shall serve 4 year terms and may succeed themselves but may not serve more than 2 consecutive full terms.
6. Membership terms shall continue to be staggered so that the Board will always be served by experienced members.
7. Officers shall be elected in accordance with the adopted rules of procedure.

9.1.6 STORMWATER ADVISORY COUNCIL

A. POWERS AND DUTIES

The Lancaster County Stormwater Advisory Council shall have the following powers and duties to be carried out in accordance with terms of this ordinance:

1. To provide input and guidance on the Lancaster County Stormwater Management Plan.
2. To review and consider annual performance measures and practices.

B. MEMBERSHIP

The Lancaster County Stormwater Advisory Council shall consist of seven members representing residents knowledgeable in stormwater and erosion control. The Council shall consist of the Public Works Director, the Planning Department Director, the Zoning Official, the County Engineer, and 3 Lancaster County residents.

9.1.7 MEETINGS AND GENERAL PROCEDURES

A. ALL MEETINGS TO BE OPEN

All meetings of bodies under this ordinance shall be open to the public in accordance with SC Freedom of Information Act and shall be conducted in accordance with the procedures set forth in the South Carolina Code of Laws, Title 30, Public Records, Chapter 4, as amended.

B. RULES OF PROCEDURE

All Boards shall adopt formal rules of procedure consistent with the level of decision-making vested with that board/commission (e.g., advisory review, quasi-judicial). Any adopted rules of procedure shall be kept on file at the Planning Department and shall be made available to the public.

C. MINUTES

Accurate minutes of each meeting shall be maintained, showing the vote of each member on each question, or if absent or failing to vote, indicating such fact, and it shall keep records of its examinations and official actions, all of which shall be filed in the office of the Administrator for the public record.

D. MEETINGS

1. All bodies authorized under this ordinance shall meet at regularly scheduled times and at such other times as determined by the chairman as provided for in the rules of procedure.
2. Special meetings may be called at any time by the chairperson or by request of a majority of members of a board or commission in accordance with that group's adopted rules of procedure.

E. CONFLICTS OF INTEREST

Members of boards and commissions shall not vote on recommendations, permits, approvals, or other issues where the outcome of the matter being considered is reasonably likely to have a direct, substantial, and readily identifiable financial impact on the member. No member shall be excused from voting except upon those matters as noted above or upon those others involving the consideration of his or her own financial interest or official conduct.

9.1.8 STAFF

The Administrator or their designee shall serve as staff to the various boards and commissions as outlined in this chapter. In addition, the County may provide legal and procedural assistance when requested.

9.1.9 ATTENDANCE / MALFEASANCE POLICY

All members shall attend board/commission meetings on a regular basis. If any member misses more than 3 meetings in one calendar year, he/she may be replaced at the discretion of the appointing authority. The appointing authority will take into consideration any extraordinary circumstances of board/commission members.

Members of boards/commissions may, after public hearing, be removed by the appointing authority for inefficiency, neglect of duty, or malfeasance in office. The appointing authority shall file a written statement of reasons for such removal.

9.2 REVIEW PROCEDURES

9.2.1 PURPOSE AND INTENT

In order to establish an orderly process to develop land within Lancaster County consistent with standard development practices and terminology, it is the purpose of this chapter to provide a clear and comprehensible development process that is fair and equitable to all interests, including the applicants, affected neighbors, County staff and related agencies, and the County Council.

9.2.2 GENERAL PROVISIONS AND APPLICABILITY

The provisions of this chapter shall be applicable to all development activity under the jurisdiction of Lancaster County.

A. NO CONSTRUCTION TO COMMENCE WITHOUT PERMIT

No land shall be used or occupied, no use shall be established, and no structures shall be erected, moved, extended, or enlarged, nor shall any excavation or filling of any lot for the construction of any building be initiated until the Administrator has issued an appropriate permit which will certify that the proposed work is in conformity with the provisions of this ordinance.

B. FEE SCHEDULE

As warranted, the County shall adopt as part of their annual budgeting process, a schedule of fees for application and processing as specified in this ordinance.

C. APPLICATION COMPLETENESS REVIEW

1. **Application Deadline:** Applications shall be submitted to the Administrator in accordance with submittal dates.
2. **Evidence of Authority:** The Administrator may require an applicant to present evidence of authority to submit the application.
3. **Application Filing Date:** An application shall be considered as "filed" or "submitted" on the date it is received if it is found to be complete and sufficient for processing by the

Administrator.

4. **Application Sufficiency to be Determined by the Administrator:** The Administrator shall review the application and accompanying evidence and thereafter determine if the application is complete and sufficient for processing. The presumption shall be that all of the information required for an application to be considered complete and sufficient for processing is, according to the appropriate permit type, and in the "Application Submittal Requirements" list on file in the Planning Department. However, it is recognized that each application is unique, and therefore more or less information may be required according to the needs of the particular case. In general, an application shall be complete and sufficient for processing when it contains all of the information necessary to decide whether or not the development as proposed will comply with all of the requirements of this ordinance.

5. **Application Processing:** Applications deemed to be sufficient for processing shall be scheduled for review in accordance with the Permit/Process Type Table below. If, in the opinion of the Administrator, a submittal at any stage of review is incomplete, the application shall be removed from the agenda of the appropriate board/commission and not further processed until deemed complete and sufficient for processing. At any stage of review, the Administrator or any County board or commission, may require, at the applicant's expense, the submission of any plan, study, or other information, in addition to that specified in the submittal requirements, in order to determine the development as proposed will comply with all of the requirements of this ordinance.

9.2.3 PERMIT/PROCESS TYPE TABLE

Permit/ Process Type	Section	Permit/ Process Type	Reviewing Agency	Public Notification	Approving Agency	Appeal Process	Permit Period	Permit Extension
Zoning Permit	9.2.7.A	Administrative	Admin	None	Admin	BZA	6 months	6 months
Temporary Use Permit	9.2.7.B	Administrative	Admin	None	Admin	BZA	See Chapter 5	n/a
Certificate of Occupancy	9.2.7.C	Administrative	Admin	None	Admin	BZA	n/a	n/a
Modification of Dimensional Standards	9.2.7.D	Administrative	Admin	None	Admin	BZA	n/a	n/a
Sedimentation & Erosion Control Plan/Grading Permit	9.2.8.A	Administrative	Admin	None	Admin	BZA, SCDHEC	3 years	Re-submit
Stormwater Management Permit	9.2.8.B	Administrative	Admin	None	Admin	BZA	1 year	1 year
Floodplain Development Permit	9.2.8.C	Administrative	Admin	None	Admin	BZA	1 year	Re-submit
Site Plan	9.2.9.A	Administrative	TRC	None	TRC	PC	1 year	1 year
Subdivision (Minor & Recombination)	9.2.10.A	Administrative	TRC	None	TRC	BZA	180 days to record Plat	n/a
Subdivision (Major) – Preliminary Plat	9.2.10.B	Administrative	TRC	Yes (1,2,3)	PC	CP	2 years to Final Plat	1 year
Subdivision (Major) – Final Plat	9.2.10.C	Administrative	TRC	None	TRC	BZA	60 days to record Plat	n/a
Street Names	9.2.11	Administration	PC	Yes (1,2,3)	PC	CP	n/a	n/a
Variances	9.2.12	Quasi-Judicial	BZA	Yes (1,2,3)	BZA	CP	30 days to Appeal	n/a
Special Exceptions	9.2.13	Quasi-Judicial	BZA	Yes (1,2,3)	BZA	CP	2 years	6 months
Appeal of Administrative Decisions	9.2.14	Quasi-Judicial	BZA and/or PC	Yes (1,2,3)	BZA	CP	30 days to Appeal	n/a
Text Amendments & Rezoning	9.2.15	Legislative	TRC, PC	Yes (1,2,3)	County Council	CP	n/a	n/a
Conditional Use	9.2.16	Legislative	PC	Yes (1,2,3)	County Council	CP	May be rescinded	n/a
Mixed-Use District/Master Development Plan	9.2.9.B	Legislative	PC	Yes (1,2,3)	County Council	CP	2 years	1 year
Vested Rights	9.2.17	Legislative	PC	Yes (1, 2)	County Council	None	2 years	5 years
Development Agreements	9.2.18	Legislative	TRC, PC	Yes (1,2)	County Council	CP	n/a	n/a

Admin – Administrator \ County Council | TRC – Technical Review Committee \ PC – Planning Commission \ BZA – Board of Zoning Appeals \ SCDHEC – South Carolina Department of Health and Environmental Control \ CP – Court of Common Pleas

9.2.4 PUBLIC NOTIFICATION

The following procedures have been established for development applications/petitions that require notification of the public prior to consideration and/or approval.

A. LEVEL 1 – FREEDOM OF INFORMATION ACT LIST

1. **Required Notification Type:** A notice of the pending application/meeting shall be posted in a prominent location in the County Administration Building and on the County's website, and a notice of such meeting shall be sent to each person and media provider that has filed a written request for notice with the Clerk to Council. Non-media members may join this list on an annual renewal basis beginning January 1 of each year. Members of this distribution list must renew their participation in this distribution on an annual basis.

2. **Delivery Method:** Notices shall be distributed by email unless otherwise stipulated by members of the list.

3. **Required Period of Notice:** This notice shall be posted and mailed, e-mailed, or delivered at least 24 hours before the time of the meeting.

B. LEVEL 2 – GENERAL NOTICE IN NEWSPAPER

1. **Required Notification Type/Delivery Method:** The County shall publish a notice in a newspaper of general circulation. The notices shall include the time, place, and date of the hearing/meeting and include a description of the property and the nature of the proposal.

2. **Required Period of Notice – Comprehensive Plan Amendments:** The County shall publish a notice prior to the hearing date. The publication shall appear at least 30 calendar days prior to the hearing date.

3. **Required Period of Notice – All Other Hearings:** The County shall publish a notice prior to the hearing date. The publication shall appear at least 15 calendar days prior to the hearing date.

C. LEVEL 3 – NOTIFICATION TO AFFECTED AND ADJACENT PROPERTY OWNERS

1. **Mailed Notice**

   a. **Required Notification Type:** The County shall serve notice by first class mail of the hearing/meeting to each of the following: owners of all property affected by a pending action, all abutting properties as identified by the County tax records, and all properties on all sides of the subject property (including across any adjacent streets). The notices shall include the time, place and date of the hearing/meeting and include a description of the property and the nature of the proposal.

   b. **Required Period of Notice – All Other Hearings:** Such notification shall be postmarked at least 15 calendar days prior to the date of the meeting at which the matter is to be heard.

2. **Published Notice – Full Community Notification:** As an alternative, to the mailed notice requirements in the above paragraph, the County may elect to serve notice through a full community notification for pending actions that affect at least 50 properties or more with at least 50 different property owners or more.

   a. **Required Notification Type:** The County shall publish notice of the hearing/meeting in a newspaper of general circulation in the County. Two advertisements shall be published in separate calendar weeks. Each advertisement shall not be less than ½ of a newspaper page in size. The County may elect to provide notification via digital media, such as webpage, emails, and social media.

   b. **Mailed Notice Required Outside Newspaper Circulation Area:** The advertisement shall only be effective for property owners who reside in the area of general circulation of the newspaper which publishes the notice. Property owners who reside outside of the newspaper circulation area, according to the address listed on the most recent property tax listing for the affected property, shall be notified by first class mail.

3. **Posted Notice:** In addition to providing mailed notice or published notice, as required in Sections 9.2.4.A and B, the County shall place a sign in a prominent location on the subject property(ies) or on an adjacent public street or highway right-of-way with a notice of the pending action and a phone number to contact for additional information. Such posting shall occur at least 15 calendar days prior to the hearing date.

4. **Additional Requirements for Third Party Re-Zonings:** Except for a County -initiated zoning map amendment, when an application is filed to request a zoning map amendment and that application is not made by the owner of the parcel of land to which the amendment would apply, the applicant shall certify to the Administrator that the owner of the parcel of

land as shown on the County tax listing has granted authority for a third-party rezoning request. Both the property owner and third-party will be notified of public hearings and decisions.

D. NEIGHBORHOOD MEETING

Neighborhood meetings are optional, but may be encouraged by the Administrator for certain applications prior to any public hearing or review by a board or commission. Neighborhood meetings allow the applicant to explain the proposed project and hear the concerns of the neighborhood. A summary of the meeting in the form of meeting notes or minutes along with a list and contact information for all attendees may be submitted to the Administrator and/or the appropriate board or commission for their review. Lancaster County is not responsible for organizing or coordinating such neighborhood meetings.

9.2.5 APPLICATION REQUIREMENTS

The following general standards for various applications are intended to require only that data/information necessary to render an informed decision by the reviewing agency. The County has determined that it is unnecessary to require a full set of architectural or engineering drawings for review by the various review and decision-making boards unless the application is such that a specific level of detail is necessary (e.g., floodplain/stormwater variance). The "Application Submittal Requirements" list on file in the Planning Department is intended to provide further guidance to applicants as to the necessary level of detail for each application component listed below.

Permit/ Process Type	Section	Site Analysis	Sketch Plan *	Preliminary Plat	Construction Documents	As-Built Drawings	Final Plat	Building Elevations	Sedimentation & Erosion Control Plan	Floodplain Development Plan
UDO Zoning Permit	9.2.7.A		X *(a)*							
Temporary Use Permit	9.2.7.B		X *(a)*							
Certificate of Occupancy	9.2.7.C	See Administrator								
Modification of Dimensional Standards	9.2.7.D		X							
Sedimentation & Erosion Control Plan/Grading Permit	9.2.8.A	X			X				X	
Stormwater Management Permit	9.2.8.B	X			X	X	X *(a)*		X	
Floodplain Development Permit	9.2.8.C	X			X	X				X
Site Plan	9.2.9.A	X	X *(a)***	X	X			X *(a)*		
Subdivision (Minor & Recombination)	9.2.10.A	X	X *(a)*	X			X			
Subdivision (Major) – Preliminary Plat	9.2.10.B	X	X	X	X					
Subdivision (Major) – Final Plat	9.2.10.C					X	X			
Street Name Changes	9.2.11	See Administrator								
Variances	9.2.12	See Administrator								
Special Exceptions	9.2.13	X *(a)*		X (a)				X (a)		
Appeal of Administrative Decisions	9.2.14	See Administrator								
Text Amendments & Rezoning	9.2.15	See Administrator								
Conditional Use	9.2.16	See Administrator								
Mixed-Use District/Master Development Plan	9.2.9.B	X	X	X				X	X	X
Vested Rights	9.2.17			X						
Development Agreements	9.2.18	See Administrator								

X - Required | X (a) – on an "as needed" basis as determined by the Administrator
**Sketch Plans shall be reviewed as binding documents for Unified Development Ordinance Zoning Permit (Zoning Permits), and for any other permits or approvals for which the Administrator requires only a Sketch Plan to be submitted with the application. Sketch Plans shall be used for non-binding review*

for all other development application processes in which they are required.

** (Ord. No. 2019-1622, 12.9.19)

A. SITE ANALYSIS

A site analysis is intended to identify forest stands or trees of a uniform size and species; specimen trees of varying sizes and species, particularly free standing or open-grown or field grown trees; a distinctive tree line or forest edge; existing watercourses; previously documented Federally and State recognized endangered species habitats; and historic or culturally significant areas. Identification of existing trees, understory vegetation, wetlands, perennial streams, floodplains, and topographical features on a site prior to the advanced preparation of development plans enables the reasonable and practical planned preservation of existing and environmentally sensitive areas. This requirement provides the County and the applicant the ability to evaluate the proposed development in order to preserve vegetation, to improve the appearance of the development proposed and to encourage the use of the existing forest and tree canopy, specimen trees, and significant vegetation to satisfy the requirements of this ordinance. It is the expectation that readily available spatial data, including GIS information, will be sufficient for this survey.

B. SKETCH PLAN

The Sketch Plan shall show in simple line drawing form the proposed layout of streets, lots, buildings, civic spaces and other features in relation to existing conditions based upon the size of the tract proposed for development. Sketch Plans for districts requiring design review shall also indicate the type, size and design of materials proposed and also the construction techniques to be used. Sketch Plans shall be reviewed as binding documents for Unified Development Ordinance Zoning Permits, and for any other permits or approvals for which the Administrator requires only a Sketch Plan to be submitted with the application. Sketch Plans shall be used for non-binding review for all other development application processes in which they are required.

C. PRELIMINARY PLAT

The Preliminary Plat is intended to provide a detailed two-dimensional drawing that illustrates all of the required site features including buildings, parking areas, streets locations, street sections, conceptual size and location of on-site stormwater facilities, rights-of-way, easements, property lines and setbacks, required or proposed watercourse buffers, site landscaping and lighting (in conceptual form), and all related development calculations (e.g., density, proposed building areas, number of parking spaces, impervious surface allocation, etc.) in sufficient detail to show compliance with this ordinance. Detailed engineering drawings such as subsurface utilities (e.g., water and sewer) and on-site stormwater facilities are not required for Preliminary Plats. Preliminary Plats shall be prepared by a licensed professional land surveyor, licensed architect, licensed landscape architect or licensed engineer.

D. CONSTRUCTION DOCUMENTS

The Construction Documents for Site Plans and Subdivision Plans shall constitute a full and complete set of engineered drawings necessary for final permitting and construction. All streets, utilities, and stormwater, and other infrastructure systems shall be designed and constructed in accordance with the adopted specifications, standards and design. Construction Documents shall be prepared by a licensed professional land surveyor, licensed architect, licensed landscape architect or licensed engineer.

E. AS-BUILT DRAWINGS

The "as-built" plans shall show the final design specifications for all public infrastructure in accordance with Appendix C, Lancaster County Manual of Specifications, Standards and Design (MSSD). The designer of the infrastructure shall certify, under seal, that the installed infrastructure is in compliance with the approved plans and designs and with the requirements of this ordinance. A final inspection and approval by the Administrator shall occur before the release of any performance securities. As-Built Drawings shall be prepared by a licensed

professional land surveyor, licensed architect, licensed landscape architect or licensed engineer.

F. FINAL PLAT

The final plat shall be prepared by a registered land surveyor, licensed to practice in the State of South Carolina and shall meet the requirements of the Lancaster County Register of Deeds Office. The final plat shall constitute an accurate survey of the entire phase as shown on the approved preliminary plat and shall include all the relevant notes and certifications.

G. BUILDING ELEVATIONS

In order to reasonably evaluate the building, it is necessary to submit scaled drawings of each elevation visible from a street or civic space. These drawings are not required to be in color but should accurately represent the building heights, floor levels, and building materials, and should include written identification of building materials. If necessary, the Administrator may require up to 3 drawings from different perspectives that will show how the building fits into the context of the block or surrounding developments. Elevations for renovated buildings should focus on illustrating the proposed changes in relation to the existing structure.

H. SEDIMENTATION AND EROSION CONTROL PLAN

The Sedimentation and Erosion Control Plan shall constitute a full and complete set of engineered drawings necessary for the issuance of a grading permit to assure that land-disturbing activity undertaken in Lancaster County does not result in accelerated erosion and sedimentation. The Sedimentation and Erosion Control Plan shall be submitted as a part of the review process.

I. FLOODPLAIN DEVELOPMENT PLAN

A plot plan drawn to scale shall be submitted to the Administrator prior to any development activities proposed to be located within flood prone areas.

9.2.6 GENERAL REQUIREMENTS FOR QUASI-JUDICIAL HEARINGS AND DECISIONS

A quasi-judicial decision is a process that involves the finding of facts regarding a specific application of an ordinance and the exercise of discretion when applying the standards of the ordinance. Quasi-judicial decisions include decisions involving variances, special exception permits, and appeals of administrative determinations. Decisions on the approval of site plans and subdivisions are quasi-judicial in nature if the ordinance authorizes a decision-making board or commission to approve or deny the application based not only upon whether the application complies with the specific requirements set forth in the ordinance, but also on whether the application complies with one or more generally stated standards requiring a discretionary decision on the findings of fact to be made by the decision-making board. As a result, the following standard procedures shall be incorporated to guide all quasi-judicial proceedings as appropriate.

A. STANDARDS FOR CONDUCT OF QUASI-JUDICIAL HEARINGS

1. **Contact with Decision-Making Board Members:** Contact with any members of a decision-making Board prior to the public hearing by any individual regarding the matter is prohibited.

2. **All Participants to be Sworn In:** All participants in the public hearing shall be duly sworn in prior to the submission of any testimony.

3. **Competent Evidence Required:** All decisions shall be based on competent evidence entered in as part of the record. The term "competent evidence," as used in this subsection, shall not preclude reliance by the decision-making Board on evidence that would not be admissible under the rules of evidence as applied in the trial division of the General Court of Justice if (i) the evidence was admitted without objection, or (ii) the evidence appears to be sufficiently trustworthy and was admitted under such circumstances that it was reasonable for the decision-making Board to rely upon it. The term "competent evidence,"

as used in this subsection, shall not be deemed to include the opinion testimony of lay witnesses as to any of the following:

a. The use of property in a particular way would affect the value of other property.

b. The increase in vehicular traffic resulting from a proposed development would pose a danger to the public safety.

c. Matters about which only expert testimony would generally be admissible under the rules of evidence.

4. **Calculation of Majority Vote:** The required majority necessary to rule in the affirmative on a quasi-judicial proceeding shall be as follows:

a. A simple majority is required to rule in the affirmative on Special Exceptions Permits, Appeals of Administrative Decision and Variances.

b. Absent members, vacant positions on boards/commissions, and members who are disqualified from voting on a quasi-judicial matter, shall not be considered members of the board/commission for the purposes of calculating the requisite majority.

B. STANDARDS FOR DECISIONS

Each decision-making Board under the provisions of this section shall ensure that the rights of applicants have not been prejudiced because the decision-making body's findings, inferences, conclusions, or decisions were:

1. In violation of constitutional provisions, including those protecting procedural due process rights.

2. In excess of the statutory authority conferred upon the County or the authority conferred upon the decision-making Board by ordinance.

3. Inconsistent with applicable procedures specified by statute or ordinance.

4. Affected by other error of law.

5. Unsupported by substantial competent evidence in view of the entire record.

6. Arbitrary or capricious.

C. RECORD OF DECISION

1. The following shall become part of the official record of decision:

- A detailing of the specific findings of fact made by the decision-making board;
- Documents and exhibits submitted to the decision-making board;
- Meeting minutes.

2. **Transcript of Audio:** Any party may request, at their expense, a transcript of the proceedings from any recorded audio/video.

9.2.7 ADMINISTRATIVE PERMITS

A. ZONING PERMIT

A Zoning Permit shall be required for the construction or development of any new use within the land development jurisdiction of Lancaster County, and any other site improvement as indicated in the UDO. In addition to new uses, a Zoning Permit shall be required for expansions of existing uses, changes of use, and any uses permitted with conditional use and special exceptions.

1. **Applicability:**
   a. For the following application types, a Zoning Permit shall be the only development approval required:
      i. Any residential development with fewer than 5 units (dwelling-single family and dwelling-two families).
      ii. Any uses permitted with review.
      iii. Any permit involving the construction, enlargement, placement, or alteration of signage.
   b. All other development in Lancaster County shall require a Zoning Permit in addition to other necessary approvals as outlined in this chapter.
2. **Process Type:** Administrative.
3. **Pre-Application Procedure:** No meeting is required but, applicants are encouraged to call or visit the Administrator prior to requesting a Zoning Permit to determine what information is required for the application.
4. **Required Application Information:** Sketch Plan and any other relevant information to show compliance (may be waived by Administrator as appropriate).
5. **Determination of Conformity:** Once an application is deemed complete by the Administrator, the Administrator shall review the application and approve or deny it based on compliance with the land development standards contained in this ordinance.
6. **Public Notification:** None required.
7. **Appeals:** Appeals of the decisions of the Administrator shall be heard by the Board of Zoning Appeals.
8. **Permit Validity:** Upon the approval of the Zoning Permit, the applicant shall have 6 months to obtain a building permit or otherwise begin the permitted use. Failure to secure building permits for the permitted work within this time shall render the compliance void. Upon issuance of a building permit, the Zoning Permit shall remain valid as long as a valid building permit exists for the project. Any change to the approved plans that has not been authorized by the Administrator shall invalidate the Zoning Permit and any subsequent building permits.
9. **Permit Extension:** The Administrator may grant a single extension of this time period of up to 6 months upon submittal by the applicant of sufficient justification for the extension.

B. TEMPORARY USE PERMIT

A Temporary Use Permit is required for uses permitted in accordance with Chapter 5 prior to the commencement of any use or activity.

1. **Process Types:** Administrative.
2. **Pre-Application Procedure:** No meeting is required, but applicants are encouraged to call or visit the Administrator prior to requesting a Temporary Use Permit to determine what information is required for the application.
3. **Required Application Information:** Sketch Plan and any other relevant information to show compliance (may be waived by Administrator as appropriate).
4. **Determination of Conformity:** Once an application is deemed complete by the Administrator, the Administrator shall review the application and approve, approve it with conditions, or deny it based on compliance with the land development standards contained in this ordinance.

5. **Public Notification:** None required.
6. **Appeals:** Appeals of the decisions of the Administrator shall be heard by the Board of Zoning Appeals.
7. **Permit Validity:** See Chapter 5.
8. **Permit Extension:** See Chapter 5.

C. CERTIFICATE OF OCCUPANCY

Issuance of a Certificate of Occupancy (hereafter referred to as "CO") shall be required prior to the occupancy or use of any new construction and re-occupancy or re-use of any renovation/rehabilitation in Lancaster County. COs insure that a completed development project has complied with all the applicable requirements of the International Building Code, as amended, and all other applicable federal, state and local regulations. COs must be signed by building inspections staff and the Administrator to certify compliance with applicable regulations.

1. **Process Type:** Administrative.
2. **Pre-Application Procedure:** Not required.
3. **Required Application Information**: None.
4. **Determination of Conformity:** Upon receipt of the request for a CO, the building official and Administrator shall inspect the project site for compliance with the approved site plan or subdivision plat and the applicable standards of this chapter and the International Building Code, as amended. The applicant shall be notified of any deficiencies in the building(s) or site that prevents the issuance of the CO, otherwise the CO shall be issued. If final improvements are complete for only a portion of the development, the Administrator, at his/her discretion, may grant a partial CO that allows for a proportional release of the development for occupation.
5. **Public Notification:** None required.
6. **Appeals:** Appeals of the decisions of the Administrator shall be heard by the Board of Zoning Appeals.
7. **Permit Validity:** N/A.
8. **Permit Extension:** N/A.

D. ADMINISTRATIVE MODIFICATION OF DIMENSIONAL STANDARDS

In keeping with the purpose of these regulations to accomplish coordinated, balanced, and harmonious development in a manner which will best promote the health, safety, and general welfare while avoiding undue and unnecessary hardships, the Administrator is authorized to approve certain requests for deviation from dimensional standards.

1. **Process Type:** Administrative.
2. **Pre-Application Procedure:** Not required.
3. **Required Application Information:** Sketch Plan and any other relevant information to demonstrate undue and unnecessary hardship (may be waived by Administrator as appropriate).
4. **Conditions for Modification of Setbacks:** Requests for the deviation from required setbacks set forth in this ordinance by up to 10 percent of the required setbacks or 24 inches, whichever is greater, <u>but no more than 24 inches</u>, may be considered upon determination that one or more of the following conditions exists:

a. There are site or structural conditions that preclude strict adherence to the setback requirements, such as, but not limited to: the lot does not meet the dimensional standards established for the zoning district in which it is located; the lot has topographic limitations that require placement of the structure into the required setback area; or the structure is physically in line with an existing, legally-established wall or walls of a principal structure already within the minimum setback area.

b. The part of the proposed structure that would encroach into the minimum setback area is less than 50 percent of the width of the affected building facade(s), provided the part of the structure that would encroach into a front setback shall either be open (such as a porch or screen room) or not subject to occupancy (such as a chimney).

c. The part of the proposed structure that encroaches into the minimum setback area is necessitated by a life-safety code, flood hazard reduction, Americans with Disabilities Act standard, or other public safety code requirements.

d. The proposed structure will allow the preservation of significant existing vegetation.

e. A good faith error was made in the location of a building foundation not exceeding 24 inches due to either field construction or survey error.

5. **Limitation on Administrative Discretion:** The Administrator has no discretion to modify any requirements found in Chapter 5.

6. **All Decisions to be in Writing:** Prior to rendering a decision, the Administrator shall notify the County Administrator in writing of any minor deviation for approval.

7. **Administrative Authority is Permissive Only:** The authority given to the Administrator to grant such modification shall be construed to be permissive and not mandatory, and the Administrator may decline to make such modification. In the event denial occurs, the applicant shall have the right to submit an application to the Board of Zoning Appeals to grant a variance to these requirements. Nothing in this section shall be construed as limiting the Administrator's duties and rights under this chapter, or an applicant's right to apply for a variance.

9.2.8 ENVIRONMENTAL PROTECTION PERMITS

A. SEDIMENTATION AND EROSION CONTROL PLAN/GRADING PERMIT

1. **Applicability:** To assure that land-disturbing activity undertaken in Lancaster County does not result in accelerated erosion and sedimentation, no such land- disturbing activity shall take place until plans for controlling erosion associated with the activity have been reviewed and approved in accordance with the procedures set forth below. Land-disturbing activity on development 1 acre or greater in area shall also require approval of a Sedimentation and Erosion Control Plan.

2. **Process Type:** Administrative.

3. **Pre-Application Procedure:** Prior to applying for a Grading Permit and submitting plans, the applicant is required to meet with the Administrator. The purpose of this meeting is to discuss the project, the proposed land development strategies, and to answer questions of the applicant regarding the application and schedules for review.

4. **Required Application Information:** Site Analysis (may be waived by Administrator as appropriate) & Construction Documents. For applications involving development of 1 acre or greater a Sedimentation and Erosion Control Plan shall also be required according to the review and approval procedures set out for such plans in this chapter.

5. **Determination of Conformity:** Following submittal of the application and accompanying data, the information shall be reviewed by the Administrator for compliance with the

requirements of this ordinance. Once an application is deemed complete and accepted by the Administrator it shall be reviewed and acted on within 30 days of the date it is accepted.

6. **Public Notification:** None required.

7. **Appeals:** Appeals of the decisions of the Administrator shall be heard by the Board of Zoning Appeals at its next regularly scheduled meeting, but not less than 21 days, after receipt of written notice of disapproval or conditional approval that is unsatisfactory to the applicant. Appeals from the decision of the Board of Zoning Appeals may be taken to the South Carolina Department of Health and Environmental Control (SC DHEC).

8. **Permit Validity:** When work under a Grading Permit is not initiated within 3 years following the date of issuance of the Grading Permit, the Grading Permit shall be deemed expired.

9. **Permit Extension:** Renewal of an expired Grading Permit shall require the same application procedure as the initial permit. No further grading is to be performed until the new permit is issued.

B. STORMWATER MANAGEMENT PERMIT

To ensure that development in the County does not result in increased stormwater runoff which adversely impacts adjacent property and stormwater systems convey appropriate storm events, no development to which this ordinance applies, shall be commenced without the issuance of a Stormwater Permit by the Administrator.

1. **Process Type:** Administrative.

2. **Pre-Application Procedure:** Applicants are encouraged to meet with the Administrator prior to submitting an application for development. This pre-submittal meeting should take place prior to submission of an application for the Preliminary Plat of the subdivision or other early step in the development process. The purpose of this meeting is to discuss the post-construction stormwater management measures necessary for the proposed project, as well as to discuss and assess constraints, opportunities and potential approaches to stormwater management designs before formal site design engineering is commenced. To accomplish this goal, the following information should be included in the concept plan, which should be submitted in advance of the meeting:

   a. Existing conditions/proposed site plans;

   b. Natural resources inventory;

   c. Stormwater management system concept plan.

3. **Required Application Information:** Site Analysis and Construction Documents (may be waived by Administrator as appropriate). An approved Site Plan or Final Plat may also be required as appropriate.

4. **Determination of Conformity:** Following submittal of the application and accompanying data, the information shall be reviewed by the Administrator for compliance with the requirements of this ordinance. Once an application is deemed complete and accepted by the Administrator it shall be reviewed and acted on within 30 days of the date it is accepted. The Administrator may impose reasonable conditions upon the issuance of the permit to ensure compliance with this section including, but not limited to, specifications of the materials to be used and the manner in which the work or alteration is to be performed. If the Administrator finds that the application fails to comply with the standards of this section, the Administrator shall notify the applicant in writing, and shall indicate how the application fails to comply. The applicant shall have an opportunity to submit a revised application.

5. **Public Notification:** None required.

6. **Appeals:** Appeals of the decisions of the Administrator shall be heard by the Board of Zoning Appeals.

7. **Permit Validity:** An issued permit shall become null and void if the applicant fails to secure a building permit, record a final plat or initiate construction on the site within 1 year after the date of approval. In addition, when a Stormwater Permit is issued in association with a Preliminary Plat or Final Plat, the Stormwater Permit shall expire if said plan expires, is significantly modified, or is revoked.

8. **Permit Extension:** The Administrator may grant a single extension of this time limit of 1 year, for good cause shown, upon receiving a written request from the applicant before the expiration of the approved plan. In granting an extension, the Administrator may require compliance with standards adopted since the original application was submitted unless there has been substantial reliance on the original permit and the change in standards would infringe the applicant's vested rights.

9. **As-Builts Required:** After final construction of a project is completed, and before a Final Plat is granted, the applicant shall certify that the post-construction stormwater management measures have been completed in accordance with the approved plans and designs by submitting actual "as-built" plans" prepared by or under the direct supervision of a registered land surveyor or professional engineer and certified by the same. No Final Plat shall be granted without completed as-built plans.

C. FLOODPLAIN DEVELOPMENT PERMIT

1. **Designation of Local Floodplain Administrator:** The Zoning Official or his/her designee is hereby appointed to administer and implement the provisions of this ordinance.

2. **Adoption of Letter of Map Revisions (LOMR):** All LOMRs that are issued in the areas identified in Section 8.1.7.A of this ordinance are hereby adopted.

3. **Development Permit and Certification Requirements:** No approval shall be granted for construction in a Flood Hazard Area Overlay District, as outlined in Chapter 8, without the issuance of a Floodplain Development Permit.

   a. **Development Permit:** Application for a development permit shall be made to the local floodplain administrator on forms furnished by him or her prior to any development activities. The development permit may include, but not be limited to, plans in duplicate drawn to scale showing: the nature, location, dimensions, and elevations of the area in question; existing or proposed structures; and the location of fill materials, storage areas, and drainage facilities. Specifically, the following information is required:

      i. A plot plan that shows the 100-year floodplain contour or a statement that the entire lot is within the floodplain must be provided by the development permit applicant when the lot is within or appears to be within the floodplain as mapped by the Federal Emergency Management Agency or the floodplain identified pursuant to either the Duties and Responsibilities of the local floodplain administrator of Section 9.2.8.C.4.k or the Standards for Subdivision Proposals of Section 8.2.2 and the Standards for streams without Estimated Base Flood Elevations and Floodways of Section 8.2.3. The plot plan must be prepared by or under the direct supervision of a registered land surveyor or professional engineer and certified by it. The plot plan must show the floodway, if any, as identified by the Federal Emergency Management Agency or the floodway identified pursuant to either the duties or responsibilities of the local floodplain administrator of Section 9.2.8.C.4.k or the standards for subdivision proposals of Section 8.2.2.L and the standards for streams without estimated base flood elevations and floodways of Section 8.2.3.

ii. Where base flood elevation data is provided as set forth in Section 8.1.7.A or the duties and responsibilities of the local floodplain administrator of Section 9.2.8.C.4.k the application for a development permit within the flood hazard area shall show:

- The elevation (in relation to mean sea level) of the lowest floor of all new and substantially improved structures, and
- If the structure will be floodproofed in accordance with the Non-Residential Construction requirements of Section 8.2.2.B the elevation (in relation to mean sea level) to which the structure will be floodproofed.

iii. Where base flood elevation data is **not** provided as set forth in Section 8.1.7.A or the duties and responsibilities of the local floodplain administrator of Section 9.2.8.C.4.k, then the provisions in the standards for streams without estimated base flood elevations and floodways of Section 8.2.3 must be met.

iv. Alteration of Watercourse: Where any watercourse will be altered or relocated as a result of proposed development, the application for a development permit shall include a description of the extent of watercourse alteration or relocation, an engineering study to demonstrate that the flood-carrying capacity of the altered or relocated watercourse is maintained and a map showing the location of the proposed watercourse alteration or relocation.

b. **Certifications**

i. Floodproofing Certification: When a structure is floodproofed, the applicant shall provide certification from a registered, professional engineer or architect that the non-residential, floodproofed structure meets the floodproofing criteria in the non-residential construction requirements of Section 8.2.2.B and Section 8.2.5.B.2.

ii. Certification During Construction**:** A lowest floor elevation or floodproofing certification is required after the lowest floor is completed. As soon as possible after completion of the lowest floor and before any further vertical construction commences, or floodproofing by whatever construction means, whichever is applicable, it shall be the duty of the permit holder to submit to the local floodplain administrator a certification of the elevation of the lowest floor, or floodproofed elevation, whichever is applicable, as built, in relation to mean sea level. Said certification shall be prepared by or under the direct supervision of a registered land surveyor or professional engineer and certified by it. Any work done prior to submission of the certification shall be at the permit holder's risk. The local floodplain administrator shall review the floor elevation survey data submitted. The permit holder immediately and prior to further progressive work being permitted to proceed shall correct deficiencies detected by such review. Failure to submit the survey or failure to make said corrections required hereby shall be cause to issue a stop-work order for the project.

iii. As-Built Certification: Upon completion of the development a registered professional engineer, land surveyor or architect, in accordance with SC law, shall certify according to the requirements of Section 9.2.8.C.3.b.i, b.ii, b.iii that the development is built in accordance with the submitted plans and previous pre-development certifications.

4. **Duties and Responsibilities of the Local Floodplain Administrator:** Duties shall include, but not be limited to:

a. **Permit Review:** Review all development permits to assure that the requirements of this

ordinance have been satisfied.

b. **Requirement of Federal and/or State Permits:** Review proposed development to assure that all necessary permits have been received from those governmental agencies from which approval is required by Federal or State law, including section 404 of the Federal Water Pollution Control Act Amendments of 1972, 33 U.S.C 1334.

c. **Watercourse Alterations**

   i. Notify adjacent communities and the South Carolina Department of Natural Resources, Land, Water, and Conservation Division, State Coordinator for the National Flood Insurance Program, prior to any alteration or relocation of a watercourse, and submit evidence of such notification to the Federal Emergency Management Agency.

   ii. In addition to the notifications required watercourse alterations per Section 9.2.8.C, written reports of maintenance records must be maintained to show that maintenance has been provided within the altered or relocated portion of said watercourse so that the flood-carrying capacity is maintained. This maintenance must consist of a comprehensive program of periodic inspections, and routine channel clearing and dredging, or other related functions. The assurance shall consist of a description of maintenance activities, frequency of performance, and the local official responsible for maintenance performance. Records shall be kept on file for FEMA inspection.

   iii. If the proposed project will modify the configuration of the watercourse, floodway, or base flood elevation for which a detailed Flood Insurance Study has been developed, the applicant shall apply for and must receive approval for a Conditional Letter of Map Revision with the Federal Emergency Management Agency prior to the start of construction.

   iv. Within 60 days of completion of an alteration of a watercourse, referenced in the certification requirements of Section 9.2.8.C.3.b.iv, the applicant shall submit as-built certification, by a registered professional engineer, to the Federal Emergency Management Agency.

d. **Floodway Encroachments:** Prevent encroachments within floodways unless the certification and flood hazard reduction provisions of Section 8.2.2.E are met.

e. **Adjoining Floodplains:** Cooperate with neighboring communities with respect to the management of adjoining floodplains and/or flood-related erosion areas in order to prevent aggravation of existing hazards.

f. **Notifying Adjacent Communities:** Notify adjacent communities prior to permitting substantial commercial developments and large subdivisions to be undertaken in areas of special flood hazard and/or flood-related erosion hazards.

g. **Certification Requirements**

   i. Obtain and review actual elevation (in relation to mean sea level) of the lowest floor of all new or substantially improved structures, in accordance with administrative procedures outlined in Section 9.2.8.C.3.b.ii.

   ii. Obtain the actual elevation (in relation to mean sea level) to which the new or substantially improved structures have been floodproofed, in accordance with the floodproofing certification outlined in Section 9.2.8.C.3.b.i.

   iii. When floodproofing is utilized for a particular structure, obtain certifications from a registered professional engineer or architect in accordance with the non-

residential construction requirements outlined in Section 8.2.2.B.

h. **Map Interpretation:** Where interpretation is needed as to the exact location of boundaries of the areas of special flood hazard (for example, where there appears to be a conflict between a mapped boundary and actual field conditions), make the necessary interpretation. The person contesting the location of the boundary shall be given a reasonable opportunity to appeal the interpretation as provided in this Section.

i. **Prevailing Authority:** Where a map boundary showing an area of special flood hazard and field elevations disagree, the base flood elevations for flood protection elevations (as found on an elevation profile, floodway data table, etc.) shall prevail. The correct information should be submitted to FEMA as per the map maintenance activity requirements outlined in Section 8.2.2.G.2.

j. **Use Of Best Available Data:** When base flood elevation data and floodway data has not been provided in accordance with Section 8.1.7.A, obtain, review, and reasonably utilize best available base flood elevation data and floodway data available from a federal, state, or other source, including data developed pursuant to the standards for subdivision proposals outlined in Section 8.2.2.L, in order to administer the provisions of this ordinance. Data from preliminary, draft, and final Flood Insurance Studies constitutes best available data from a federal, state, or other source. Data must be developed using hydraulic models meeting the minimum requirement of NFIP approved model. If an appeal is pending on the study in accordance with 44 CFR Ch. 1, Part 67.5 and 67.6, the data does not have to be used.

k. **Special Flood Hazard Area/Topographic Boundaries Conflict:** When the exact location of boundaries of the areas special flood hazards conflict with the current, natural topography information at the site; the site information takes precedence when the lowest adjacent grade is at or above the BFE, the property owner may apply and be approved for a Letter of Map Amendment (LOMA) by FEMA. The local floodplain administrator in the permit file will maintain a copy of the Letter of Map Amendment issued from FEMA.

l. **On-Site inspections:** Make on-site inspections of projects in accordance with the administrative procedures outlined in Section 9.2.8.C.5.a.

m. **Administrative Notices:** Serve notices of violations, issue stop-work orders, revoke permits and take corrective actions in accordance with the administrative procedures in Section 9.2.8.C.5.

n. **Records Maintenance:** Maintain all records pertaining to the administration of this ordinance and make these records available for public inspection.

o. **Annexations and Detachments:** Notify the South Carolina Department of Natural Resources Land, Water and Conservation Division, State Coordinator for the National Flood Insurance Program within six (6) months, of any annexations or detachments that include special flood hazard areas.

p. **Federally Funded Development:** The President issued *Executive Order 11988, Floodplain Management May 1977. E.O.* 11988 directs federal agencies to assert a leadership role in reducing flood losses and losses to environmental values served by floodplains. Proposed developments must go through an eight-step review process. Evidence of compliance with the executive order must be submitted as part of the permit review process.

q. **Substantial Damage Determination:** Perform an assessment of damage from any origin to the structure using FEMA's Substantial Damage Estimator (SDE) software to determine if the damage equals or exceeds 50 percent of the market value of the

structure before the damage occurred.

r. **Substantial Improvement Determinations:** Perform an assessment of permit applications for improvements or repairs to be made to a building or structure that equals or exceeds 50 percent of the market value of the structure before the start of construction. Cost of work counted for determining if and when substantial improvement to a structure occurs shall be cumulative for a period of five years. If the improvement project is conducted in phases, the total of all costs associated with each phase, beginning with the issuance of the first permit, shall be utilized to determine whether "substantial improvement" will occur

The market values shall be determined by one of the following methods:

i. The current assessed building value as determined by the County's assessor's office or the value of an appraisal performed by a licensed appraiser at the expense of the owner within the past 6 months.

ii. One or more certified appraisals from a registered professional licensed appraiser in accordance with the laws of South Carolina. The appraisal shall indicate actual replacement value of the building or structure in its pre-improvement condition, *less the cost of site improvements and depreciation for functionality and obsolescence.*

iii. Real Estate purchase contract within 6 months prior to the date of the application for a permit.

5. **Administrative Procedures**

a. **Inspections of Work in Progress:** As the work pursuant to a permit progresses, the local floodplain administrator shall make as many inspections of the work as may be necessary to ensure that the work is being done according to the provisions of the local ordinance and the terms of the permit. In exercising this power, the floodplain administrator has a right, upon presentation of proper credentials, to enter on any premises within the territorial jurisdiction at any reasonable hour for the purposes of inspection or other enforcement action.

b. **Stop-Work Orders:** Whenever a building or part thereof is being constructed, reconstructed, altered, or repaired in violation of this ordinance, the floodplain administrator may order the work to be immediately stopped. The stop-work order shall be in writing and directed to the person doing the work. The stop-work order shall state the specific work to be stopped, the specific reasons for the stoppage, and the conditions under which the work may be resumed. Violation of a stop-work order constitutes a misdemeanor.

c. **Revocation of Permits:** The local floodplain administrator may revoke and require the return of the development permit by notifying the permit holder in writing, stating the reason for the revocation. Permits shall be revoked for any substantial departure from the approved application, plans, or specifications; for refusal or failure to comply with the requirements of state or local laws; or for false statements or misrepresentations made in securing the permit. Any permit mistakenly issued in violation of an applicable state or local law may also be revoked.

d. **Periodic Inspections:** The local floodplain administrator and each member of his/her inspections department shall have a right, upon presentation of proper credentials, to enter on any premises within the territorial jurisdiction of the department at any reasonable hour for the purposes of inspection or other enforcement action.

e. **Violations to be Corrected:** When the local floodplain administrator finds violations of applicable state and local laws, it shall be his/her duty to notify the owner or occupant of the building of the violation. The owner or occupant shall immediately

remedy each of the violations of law on the property he owns.

f. **Actions in Event of Failure to Take Corrective Action:** If the owner of a building or property shall fail to take prompt corrective action, the floodplain administrator shall give him written notice, by certified or registered mail to his last known address or by personal service, that:

   i. The building or property is in violation of the Flood Damage Prevention Ordinance,

   ii. A hearing will be held before the local floodplain administrator at a designated place and time, not later than 10 days after the date of the notice, at which time the owner shall be entitled to be heard in person or by counsel and to present arguments and evidence pertaining to the matter; and,

   iii. Following the hearing, the local floodplain administrator may issue such order to alter, vacate, or demolish the building; or to remove fill as appears appropriate.

g. **Order to Take Corrective Action:** If, upon a hearing held pursuant to the notice prescribed above, the floodplain administrator shall find that the building or development is in violation of the Flood Damage Prevention Ordinance, he/she shall make an order in writing to the owner, requiring the owner to remedy the violation within such period, not less than 60 days, the floodplain administrator may prescribe; provided that where the floodplain administrator finds that there is imminent danger to life or other property, he may order that corrective action be taken in such lesser period as may be feasible.

h. **Appeal:** Any owner who has received an order to take corrective action may appeal from the order to the local elected governing body by giving notice of appeal in writing to the floodplain administrator and the clerk within 10 days following issuance of the final order. In the absence of an appeal, the order of the floodplain administrator shall be final. The local governing body shall hear an appeal within a reasonable time and may affirm, modify and affirm, or revoke the order.

i. **Failure to Comply with Order:** If the owner of a building or property fails to comply with an order to take corrective action from which no appeal has been taken, or fails to comply with an order of the governing body following an appeal, he shall be guilty of a misdemeanor and shall be punished in the discretion of the court.

j. **Denial of Flood Insurance under the NFIP:** If a structure is declared in violation of this ordinance and after all other penalties are exhausted to achieve compliance with this ordinance then the local floodplain administrator shall notify the Federal Emergency Management Agency (FEMA) to initiate a Section 1316 of the National Flood Insurance Act of 1968 action against the structure upon the finding that the violator refuses to bring the violation into compliance with the ordinance. Once a violation has been remedied the local floodplain administrator shall notify FEMA of the remedy and ask that the Section 1316 be rescinded.

k. The following documents are incorporated by reference and may be used by the local floodplain administrator to provide further guidance and interpretation of this ordinance as found on FEMA's website at www.fema.gov:

   i. FEMA 55 Coastal Construction Manual

   ii. All FEMA Technical Bulletins

   iii. All FEMA Floodplain Management Bulletins

   iv. FEMA 348 Protecting Building Utilities from Flood Damage

   v. FEMA 499 Home Builder's Guide to Coastal Construction Technical Fact Sheet

9. 2. 9 SITE PLAN & MASTER DEVELOPMENT PLAN PROCESS CHART

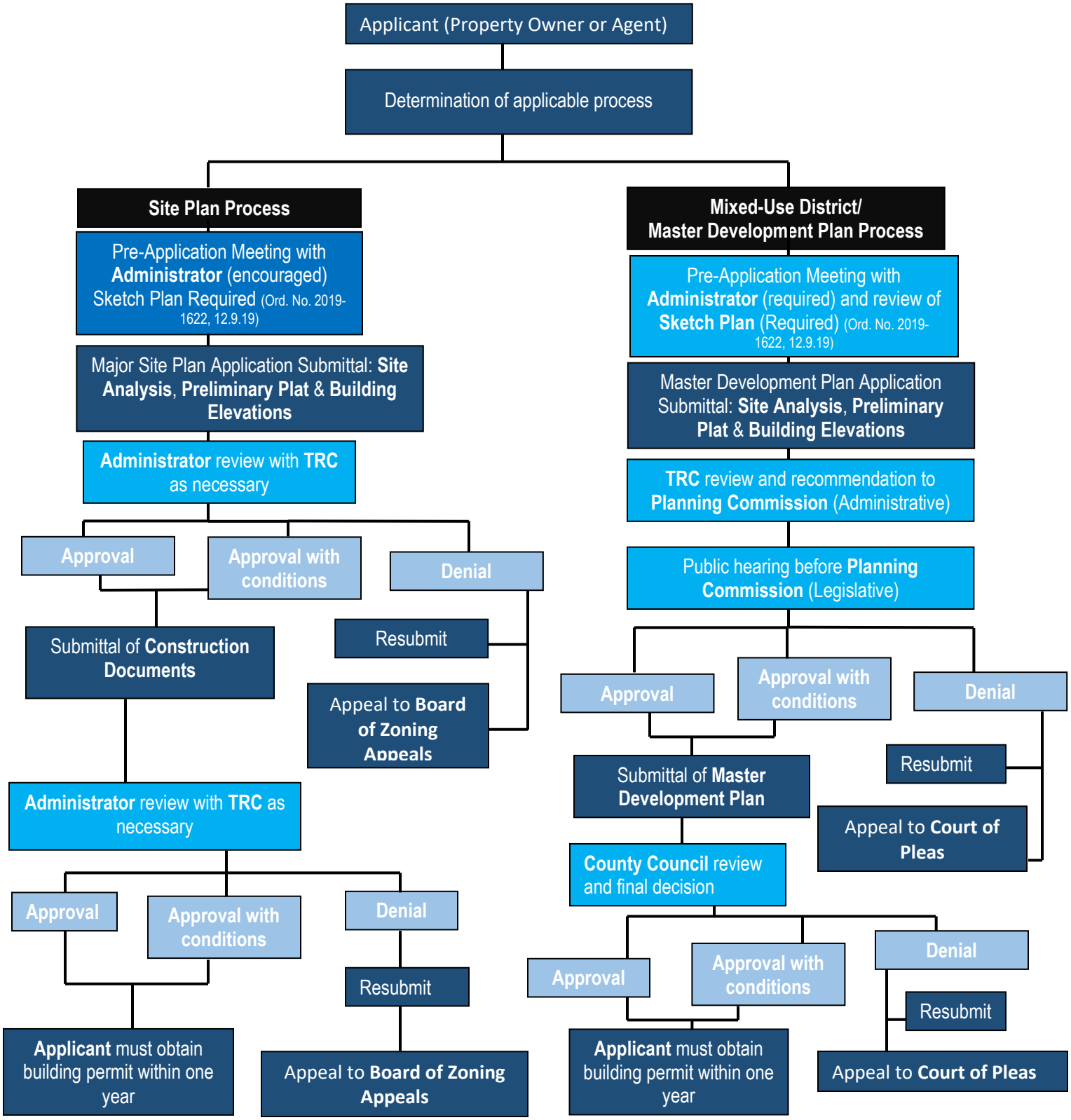

A. SITE PLAN

1. **Applicability:** The Site Plan process shall apply to all development types for which discretionary review is NOT required unless a discretionary review is requested by the applicant.
2. **Process Type:** Administrative.
3. **Pre-Application Procedure:** No meeting is required, but applicants are encouraged to call or visit the Administrator to determine what information is required for the application. If the site plan involves a property or properties which plan to have more than 40,000 square feet of building space a sketch will be required. (Ord. No. 2019-1622, 12.9.19)
4. **Required Application Information:** Site Analysis, Preliminary Plat & Building Elevations, (may be waived by Administrator as appropriate) and a Stormwater Permit shall be required as prerequisite approvals.
5. **Determination of Compliance:** Once an application is deemed complete by the Administrator, the Administrator and TRC shall review the application and approve, deny, or approve with conditions the Site Plan based on compliance with the standards contained in this ordinance. All decisions shall be in writing. Following an approval or approval with conditions, the applicant shall be directed to prepare detailed Construction Documents for final approval by the Administrator and TRC (as necessary).
6. **Public Notification:** None required.
7. **Appeals:** Appeals of the decisions of the Administrator or TRC shall be heard by the Board of Zoning Appeals.
8. **Permit Validity:** Upon the approval of the Site Plan, the applicant shall have one year to obtain a building permit. Failure to secure building permits for the permitted work within this time shall render the compliance void. Any change to the approved plans that has not been authorized by the Administrator shall invalidate the Site Plan and any subsequent building permits.
9. **Permit Extension:** The Administrator may grant a single extension of this time period of up to one year upon submittal by the applicant of sufficient justification for the extension.

B. MIXED-USE DISTRICT/MASTER DEVELOPMENT PLAN

1. **Applicability:** The Mixed-Use District/Master Development Plan process shall apply to all development types for which discretionary review is required, and in any other instance where discretionary review is requested by the applicant.
2. **Process Type:** Legislative.
3. **Pre-Application Procedure:** It is required that every applicant for a Mixed-Use District/Master Development Plan meet with the Administrator in a conference prior to the submittal of an application. The purpose of this conference is to provide clarification and assistance in the preparation and submission of plats for approval. The applicant will be required to provide a Sketch Plan to the Administrator prior to the pre-application conference. The provision of a sketch plan will allow the Administrator an opportunity to review the proposal before the applicant expends funds on the preparation of a detailed Site Plan.
4. **Required Application Information:** Site Analysis, Preliminary Plat & Building Elevations for Design Review (may be waived by Administrator as appropriate) and a Schematic Stormwater Design shall be required as prerequisite approvals as per the following table (Ord. No. 2017-1468, 9.25.17):

Mixed-Use District Master Development Plan / Required Information
General Information
Date, north point, and scale
Name and firm address of the professional individual responsible for preparing master development plan
Name and address of the property owner or applicant
Location sketch
Legal description of the subject property
Size of subject property in acres (square feet if less than two (2) acres)
Boundary survey
Preparer's professional seal
Existing Conditions
Existing zoning classification of subject property
Property lines and required setbacks (dimensioned)
Location, width and purpose of all existing easements
Location and dimension of all existing structures on the subject property
Location of all existing driveways, parking areas and total number of existing parking spaces on subject property
Abutting street right-of-way width
Location of all existing structures, driveways, and parking areas within 100 feet of the subject property's boundary
Location of all existing structures, driveways, and parking areas within 300 feet of the subject property's boundary
Existing water bodies (lakes, rivers, creeks, wetlands, etc.)
Existing landscaping and vegetation on the subject property, including a tree survey, if required
Size and location of existing utilities
Location of all existing surface water drainage facilities
Proposed Development
Location and dimensions of all proposed buildings
Location of all proposed drives (including dimensions and radii), acceleration/deceleration lanes, sidewalks, walls, fences, signs, exterior lighting, curbing, parking areas (including dimensions of a typical parking space and the total number of spaces to be provided), and unloading areas
Recreation areas, common use areas, dedicated open space and areas to be conveyed for public use
Floodplain areas and basement and finished floor elevations of all buildings
Landscape plan (showing location of proposed materials, size and type)
Layout and typical dimensions of proposed parcels and lots
Number of proposed dwelling units (by type)
Number and location of affordable dwelling units
All deed restrictions or covenants
Brief narrative description of the project including proposed use, existing floor area (square feet), size of proposed expansion (square feet), and any change in the number of parking spaces
Lighting plan
Engineering
Location and size of proposed utilities, including connections to sewer and water supply systems
Location and spacing of fire hydrants
Location and type of all proposed surface water drainage facilities

Grading plan at no more than two foot contour intervals[1]
Proposed streets (including pavement width, materials, and easement or right-of-way dimensions)
Mixed-Use District Master Development Plan / Required Information
Building Details
Typical elevation views of all sides of each building type
Gross and net floor area
Elevation views of building additions
Building height
Building materials
Additional Information
Any other information required by the planning director or planning commission to demonstrate compliance with other applicable provisions of this ordinance including, but not limited to, traffic impact analysis, environmental impact assessment and market feasibility studies.

5. **Determination of Completeness:** The Technical Review Committee (hereafter referred to as the "TRC") shall review the application to ensure that it is complete, prepare a report and recommendation on the application, and schedule the matter for a public hearing before the Planning Commission.

6. **Public Notification:** Level 1, 2 and 3.

7. **Neighborhood Meeting:** Required.

8. **Public Hearing:** The Planning Commission shall hold a hearing on the proposal. The applicant and other property owners likely to be materially affected by the application shall be given an opportunity to be heard.

9. **Decisions/Findings of Fact:** Following the public hearing the Planning Commission may approve, deny, or approve with conditions the application for a Mixed-Use District/Master Development Plan. No Mixed-Use District/Master Development Plan shall be granted unless the following "findings of fact" can be made:

   a. **Consistency with Comprehensive Plan**. All mixed use development shall be designed, constructed and maintained in conformance with the applicable guidelines and standards established by the Lancaster County Comprehensive Plan.

   b. **Integration with Transportation System**. Mixed use developments shall be designed to integrate into the adjacent transportation system relative to:

      i. Pedestrian connections to ensure accessibility to current or future transit service, if applicable;

      ii. Connectivity to existing and future roadways, sidewalks and pathways;

      iii. Complete streets roadway design that accommodates multiple transportation modes;

      iv. Strategic locations of parking lots and structures;

      v. Compatibility with the regional transportation system of arterials and collectors; and

      vi. Access management to provide internal connections between uses and prohibit individual driveway access to perimeter roads.

   c. **Impact on Infrastructure**. The development is staged in a manner that allows for and facilitates the timely provision of public utilities, facilities and services.

   d. **Compatibility of Uses and Structures**. The mixed use development is planned so land uses and densities create an appropriate transition to existing or planned uses and densities on adjoining properties.

e. **General Site Design:** The following characteristics shall be incorporated into the mixed-use development:

i. Pedestrian accessibility/concentration of development (critical mass) in a compact, walkable area.

- Uses are concentrated to promote convenient pedestrian access. Large projects concentrate uses in multiple nodes, each preferably within a quarter-mile diameter.
- Pedestrian circulation is clearly defined and connects all uses.
- Bicycle and pedestrian access are provided to adjacent developments.
- Sidewalks are provided on each side of rights-of-way or private streets throughout the development.
- Strip commercial development characterized by single story uncoordinated, unconnected buildings with large street frontage parking lots is specifically prohibited. Strip malls with uncoordinated, unconnected out parcels are prohibited. All structures are fully integrated into the mixed use project through common design themes (including, but not limited to, lighting, benches, landscaping, other decorative features but not necessarily building design), integration with a variety of uses, nonlinear arrangement, common spaces, pedestrian walkways, vehicular access connections and other features.

ii. Plazas, courtyards and other common areas are provided for public gathering and interaction. Amenities, such as benches, planters, lighting, fountains, art and landscaping that further the design theme of the project and encourage interaction shall be provided.

iii. Mixed use projects require special attention to building design because of the relationship of land uses in close proximity. Functional integration of residential and commercial uses shall be considered during design of mixed use projects. The following standards are intended to guide development of mixed-use projects:

- The mixed use development shall be designed and developed to provide an appropriate interrelationship between the various uses and structures within the development through the use of complementary materials, unified streetscape treatment, buffering, connectivity for vehicular and pedestrian movement, building orientation, parking location and height transition.
- Residential and commercial uses may be located within the same or adjoining structures, provided applicable health and safety regulations are followed.
- Structures shall provide architectural relief and interest, with emphasis at building entrances and along sidewalks, to promote and enhance a comfortable pedestrian scale and orientation. Structures shall have consistent scale and massing to create a unified project. Compatibility with the immediate context is required. However, gradual transitions in scale and massing are permitted.
    - Blank walls shall be avoided by including ground floor windows, recesses, extensions and breaks in roof elevation.
    - Design shall provide differentiation between ground level spaces and upper stories. For example, bays or balconies for upper levels, and awnings, canopies or other similar treatments for lower levels can provide differentiation. Variation in building materials, trim, paint, ornamentation, windows, or other features such as public art, may also be used.

- Design shall ensure privacy in residential sectors through effective window placement, soundproofing, landscape screening or orientation of outdoor living areas (e.g., balconies, porches and patios). Opposite facing windows at close distances should be offset vertically or horizontally, or employ appropriate materials (e.g., glazed or tinted) to protect privacy.

f. Housing diversity shall be required within the district - At least two (2) different residential types (attached, detached, multiple family, or two family) with a range of prices and sizes shall be incorporated into the development. Single-family lot sizes shall be varied to provide a mixture of lot sizes.

g. Permitted flexibility in lot sizes, setbacks, street widths and landscaping shall result in a more livable development, preservation of natural features and creation of open space consistent with the policies of the comprehensive plan and this ordinance.

h. Mixed-use developments shall not be gated and shall be interconnected to surrounding developments. Mixed-use projects shall be designed as an integral part of the surrounding community and not as an isolated development.

10. **Review by Planning Commission:** Applications for Mixed-Use District/Master Development Plan shall be acted upon within 90 days after filing, otherwise the application shall be deemed approved and a permit shall be issued. An extension of time may be granted by mutual consent of the Planning Commission and the applicant. Following an approval or approval with conditions, the applicant shall be directed to submit the Mixed-Use District/Master Development Plan for final approval by the County Council.

11. **Appeals:** An appeal from the decision of the County Council regarding a Mixed-Use District/Master Development Plan request may be made by an aggrieved party and shall be made to the Court of Common Pleas in the nature of certiorari. Any such petition to the Court of Common Pleas shall be filed with the court no later than 30 days after the applicant receives the written copy of the decision of the Planning Commission.

12. **Permit Validity:** Upon the approval of the Mixed-Use District/Master Development Plan, the applicant shall have one year to obtain a building permit. Failure to secure building permits for the permitted work within this time shall render the compliance void. Any change to the approved plans that has not been authorized by the Administrator shall invalidate the Zoning Permit and any subsequent building permits.

13. **Permit Extension:** The Administrator may grant a single extension of this time period of up to one year upon submittal by the applicant of sufficient justification for the extension.

9.2.10 SUBDIVISIONS

SUBDIVISION PROCESS CHART

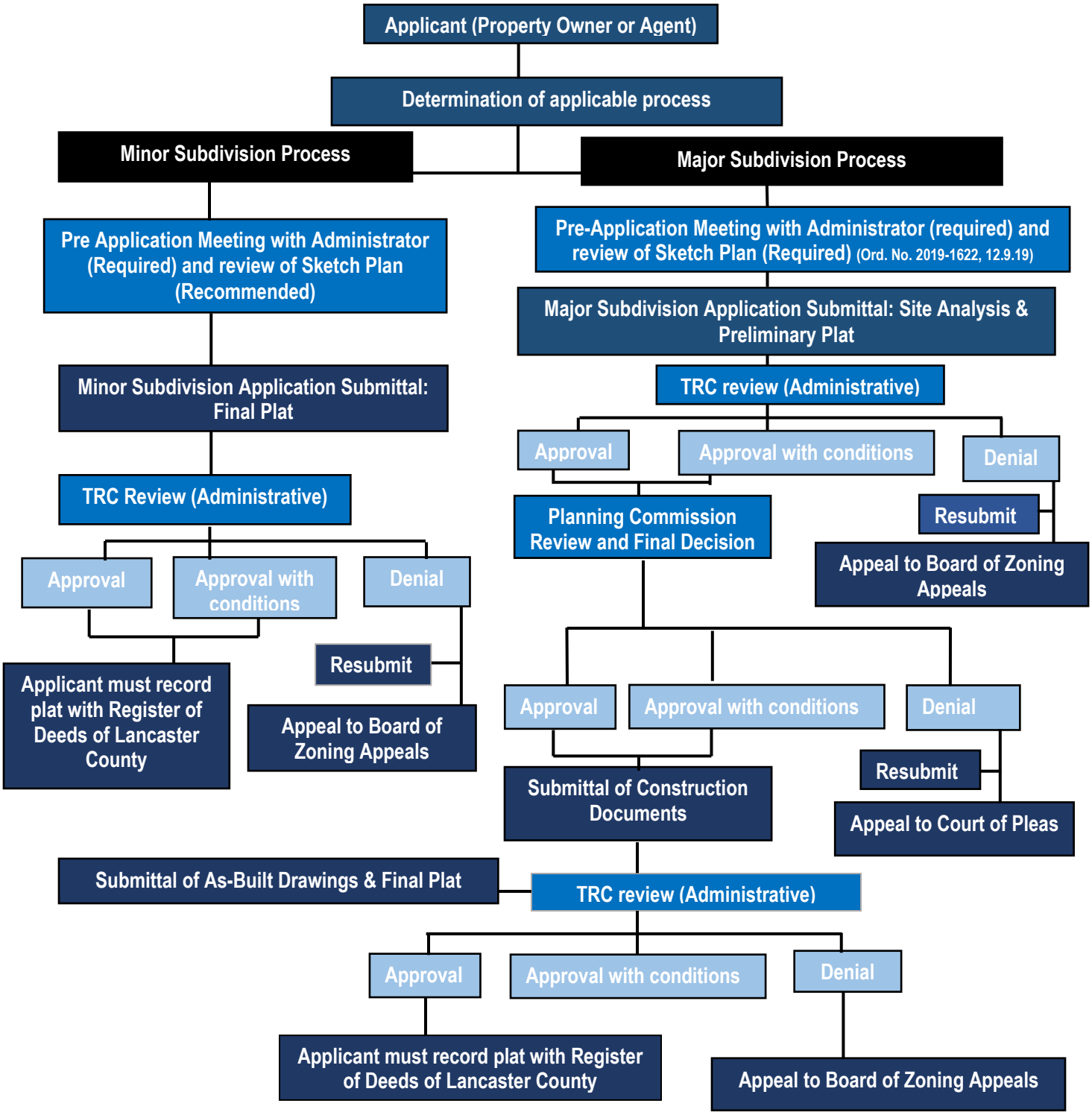

A. SUBDIVISION (MINOR AND RECOMBINATION)

1. **Applicability:** The Minor Subdivision review process is allowed for any recombination of land and for those divisions of land which:

   - do not require dedication of public utilities or public streets, and
   - include 10 or fewer acres or subdivide land into 5 or fewer lots, and
   - do not result in an increase in the number of lots/parcels included in a subdivision previously approved by Lancaster County, and
   - do not involve any other conditions that require any additional approval(s) from any County board or commission, as determined by the Administrator or TRC.

   Any division of land which does not meet all of the above criteria shall be required to use the Major Subdivision process, except that multi-family buildings with units under separate individual ownership including, but not limited to, townhome and condominium developments, shall also submit minor subdivision plats after the common walls of the building are established.

2. **Process Type:** Administrative.

3. **Pre-Application Procedure:** No meeting is required but, applicants are encouraged to call, email, or visit the Administrator for clarification and assistance in the preparation and submission of plats for approval. It is recommended that the applicant provide a Sketch Plan to the Administrator prior to or at a pre-application conference. The provision of a sketch plan will allow the Administrator an opportunity to review the proposal before the applicant expends funds on the preparation of a detailed Minor Subdivision Plan.

4. **Required Application Information:** Final Plat by a registered land surveyor. A Stormwater Permit shall be required as prerequisite approvals.

5. **Determination of Compliance:** Once an application is deemed complete by the Administrator, the TRC shall review the application and approve, deny, or approve with conditions the Minor Subdivision Plat based on compliance with the land development standards contained in this ordinance within 65 working days of its submittal. If no action is taken by the TRC within this time period, the Minor Subdivision Plat shall be deemed approved.

6. **Public Notification:** None required.

7. **Appeals:** Appeals of the decisions of the TRC shall be heard by the Board of Zoning Appeals. Such an appeal must be made in writing within 30 days of the receipt of the decision by the property owner or the property owner's agent.

8. **Permit Validity:** Upon approval of a plat for a Minor Subdivision, said plat shall be signed in the appropriate place by the Administrator and the owner(s). Minor Subdivision plats that have been granted approval shall be recorded within 180 days following approval or the approval becomes invalid. A plat for Minor Subdivision must be recorded in the office of the Register of Deeds of Lancaster County. No lots shall be sold prior to approval by the County and the recording of the plat for the subdivision.

9. **Permit Extension:** The TRC may grant a single extension of this time period of up to 180 days upon submittal by the applicant of sufficient justification for the extension.

10. **Revisions of Plat After Approval:** Where minor lot line measurements or other minor deviations from the approved Minor Subdivision Plat occur in association with in-the-field construction adjustments, such minor modifications may be approved at the discretion of the Administrator before the plat is recorded. Changes other than minor ones associated with in the field construction adjustments shall be subject to approval by the TRC.

B. SUBDIVISION (MAJOR) – PRELIMINARY PLAT

1. **Process Type:** Administrative.
2. **Permit Required Before Any Land Disturbing Activity:** No land-disturbing activity shall take place until a Preliminary Plat has been approved.
3. **Pre-Application Procedure:** It is required that every applicant for a Major Subdivision meet with the Administrator in a conference prior to the submittal of an application. The purpose of this conference is to provide clarification and assistance in the preparation and submission of plats for approval. The applicant will be required to provide a Sketch Plan to the Administrator prior to the pre-application conference. (Ord. No. 2019-1622, 12.9.19) The provision of a sketch plan will allow the Administrator an opportunity to review the proposal before the applicant expends funds on the preparation of a detailed Subdivision Plan.
4. **Required Application Information:** Site Analysis & Preliminary Plat and a Stormwater Permit shall be required as prerequisite approvals.
5. **Determination of Compliance:** Once an application is deemed complete by the Administrator, the TRC shall review the application and approve, deny, or approve with conditions the Preliminary Plat based on compliance with the land development standards contained in this ordinance within 65 working days of its submittal. If no action is taken by the Planning Commission within this time period, the Preliminary Plat shall be deemed approved.
6. **Public Notification:** 1, 2, and 3.
7. **Decisions:** Following an approval or approval with conditions of the Preliminary Plat by the Planning Commission, the applicant will be directed to prepare detailed Construction Documents for review by the Administrator and members of the TRC (as necessary). If the TRC disapproves or approves the Construction Documents, the reasons for such action shall be stated in writing. The applicant may make changes and submit a revised plan which revision shall be submitted, reviewed and acted on in accordance with the procedures set forth in this section. Once the applicant secures an approved Preliminary Plat and Construction Documents, the applicant will be directed to proceed to the preparation of a Final Plat.
8. **Appeals:** Appeals of the decisions of the TRC shall be heard by the Board of Zoning Appeals. Such an appeal must be made in writing within 30 days of the receipt of the decision by the property owner or the property owner's agent.
9. **Permit Validity:** Approval of a Preliminary Plat shall be valid for 2 years from the date of approval. If the approved Preliminary Plat provides for multiple phases within the subdivision, a Final Plat approval for any one phase shall extend the Preliminary Plat approval for all other phases for a period of up to 2 years from the date of the Final Plat approval for that phase. If a Final Plat approval has not been obtained prior to the end of this 2 year period, the Preliminary Plat approval shall become void.
10. **Permit Extension:** The Administrator may grant a single extension of this time period of up to one year upon submittal by the applicant of sufficient justification for the extension.

C. SUBDIVISION (MAJOR) – FINAL PLAT

1. **Process Type:** Administrative.
2. **Improvements to Be Installed or Guaranteed:** All required infrastructure improvements shall be either installed or financially guaranteed in accordance with Chapter 6 and all other local, State and Federal regulations.
3. **Revisions of Preliminary Plat After Approval:** Where minor lot line measurements or other minor deviations from the approved Preliminary Plat occur in association with in-the-field construction adjustments, such minor modifications may be approved at the discretion of the Administrator before the plat is recorded. Changes other than minor ones associated with in-the-field construction adjustments shall be subject to approval by the TRC.
4. **As-Builts Required:** Upon completion of required improvements, and before a Final Plat shall be granted (unless financially guaranteed), the applicant shall certify that the completed improvements are in accordance with the approved plans and designs, and shall submit actual "as built" plans for all public infrastructure after final construction is completed.
5. **Required Application Information:** Final Plat and a Stormwater Permit shall be required as prerequisite approvals.
6. **Determination of Conformity:** The Final Plat of a Major Subdivision shall be reviewed by the TRC for compliance with the requirements of this chapter and for conformity with the approved Preliminary Plat. Provided the application has been deemed complete, the TRC shall approve, deny, or approve with conditions the Final Plat within 65 working days of its submittal. If no action is taken by the TRC within this time period, the Final Plat shall be deemed approved.
7. **Public Notification:** None required.
8. **Appeals:** Appeals of the decisions of the TRC shall be heard by the Board of Zoning Appeals Such an appeal must be made in writing within 30 days of the receipt of the decision by the property owner or the property owner's agent.
9. **Effect of Approval:** The approval of a Final Plat does not constitute acceptance for maintenance or other purposes of improvements in rights-of-way, such as utility lines, street paving, drainage facilities or sidewalks. Such improvements, when located within the unincorporated areas of Lancaster County, may be accepted only by action of the County following inspection and approval. Land designated as public open space or a park on a plat shall be considered to be offered for dedication, but not accepted until County Council has by expressed action done so.
10. **Phasing:** Final plats for phased subdivisions shall be reviewed and recorded individually in accordance with the schedule presented by the applicant during the Preliminary Plat approval.
11. **Permit Validity:** Final plats for Major Subdivisions that have been granted approval must be recorded within 180 days following approval or the approval becomes invalid. No lots shall be sold prior to approval by the County and recording of the Final Plat for the subdivision.
12. **Permit Extension:** The TRC may grant a single extension of this time period of up to 180 days upon submittal by the applicant of sufficient justification for the extension.

9.2.11 STREET NAMES Reserved

9.2.12 VARIANCES

A. PURPOSE/LIMITATIONS

1. **Purpose:** The variance process administered by the Board of Zoning Appeals is intended to provide limited relief from the requirements of this ordinance in those cases where strict

application of a particular requirement will create a practical difficulty or unnecessary hardship prohibiting the use of the land in a manner otherwise allowed under this ordinance.

2. **Financial Hardship Not Sufficient Ground for Variance:** It is not intended that variances be granted merely to remove inconveniences or financial burdens that the requirements of this ordinance may impose on property owners in general or to increase the profitability of a proposed development.

3. **Use Variances Not Permitted:** In no event shall the Board of Zoning Appeals grant a variance which would allow the establishment of a use which is not otherwise allowed in a land development district or which would change the land development district classification or the district boundary of the property in question. Nor shall the Board grant a variance which would allow the establishment of a use set forth herein as requiring certain conditions or standards under conditions or standards less than those minimums.

4. **Authority Limited to this Ordinance/ Conflicts with other Laws Prohibited:** In no event shall the Board of Zoning Appeals grant a variance which would conflict with the International Building Code, as amended, or any other state code unless otherwise authorized by duly enacted applicable laws and regulations.

B. FILING PROCEDURES

1. **Process Type:** Quasi-Judicial.

2. **Pre-Application Procedure:** Every applicant for a variance is strongly encouraged to meet with the Planning Department in a pre-application conference prior to the submittal of a request for a variance. The purposes of this conference are to provide additional information regarding the review process and assistance in the preparation of the application.

3. **Filing Procedure:** An application for a variance may be filed by the owner of the property or by an agent specifically authorized by the owner to file such application.

4. **Required Application Information:** All information relevant to describing the applicant's request to the Board of Zoning Appeals.

5. Public **Notification:** Level 1, 2, and 3.

6. **Determination of Completeness:** Staff shall review an application for a variance to determine if it is complete. If an application is complete, the Administrator shall schedule the matter for consideration at a meeting of the Board of Zoning Appeals. The Administrator shall prepare a staff report regarding the submitted variance application.

C. FORMAL REVIEW

1. Action by the Board of Zoning Appeals

a. Upon receipt of the request for a variance from the Administrator, the Board of Zoning Appeals shall hold a quasi-judicial hearing on the request.

b. After conducting the hearing, the Board of Zoning Appeals may: deny the application; conduct an additional public hearing on the application; or grant the application. It shall take a majority vote of the Board to grant a variance.

c. A decision by the Board of Zoning Appeals shall be made within 30 days of the date of the hearing.

d. The Board of Zoning Appeals, as established by Lancaster County, shall hear and decide requests for variances from the requirements of the standards for the Flood Damage Prevention standards located in Chapter 8.

2. Standard of Review

a. General Variance Requests: The Board of Zoning Appeals shall not grant a variance unless and until it makes all of the following findings:

i. That there are practical difficulties or unnecessary hardships in the way of carrying out the strict letter of this ordinance;

ii. That if the applicant complies with the provisions of the ordinance, the property owner seeking the variance can secure no reasonable return from, or make no reasonable use of his property;

iii. That special conditions and circumstances exist which are peculiar to the land, structure or building involved and which are not applicable to other lands, structures or buildings located in the same land development district;

iv. That the variance will not materially diminish or impair established property values within the surrounding area;

v. That the special conditions and circumstances referenced in iii, above, result from the application of this ordinance and not from the actions of the applicant;

vi. That the variance is in harmony with the general purpose and intent of this ordinance and preserves its spirit;

vii. That the variance is the minimum necessary to afford relief; and

viii. That the public health, safety and general welfare have been assured and substantial justice has been done.

b. Floodplain Variance Procedures: Variances from the standards set forth in this ordinance for flood damage prevention may be granted according to the following provisions.

i. Floodways: Variances shall not be issued within any designated floodway if any increase in flood levels during the base flood discharge would result unless a CLOMR is obtained prior to issuance of the variance. In order to ensure the project is built in compliance with the CLOMR for which the variance is granted the applicant must provide a bond for 100 percent of the cost to perform the development.

ii. Conditions: Upon consideration of the factors listed above and the purposes of this ordinance, the BZA may attach such conditions to the granting of variances as it deems necessary to further the purposes of this ordinance. The following conditions shall apply to all variances:

- Variances may not be issued when the variance will make the structure in violation of other federal, state, or local laws, regulations, or ordinances.
- Variances shall only be issued upon a determination that the variance is the minimum necessary, considering the flood hazard, to afford relief.
- Variances shall only be issued upon a showing of good and sufficient cause, a determination that failure to grant the variance would result in exceptional hardship, and a determination that the granting of a variance will not result in increased flood heights, additional threats to public safety, extraordinary public expense, create nuisance, cause fraud on or victimization of the public, or conflict with existing laws or ordinances.
- Any applicant to whom a variance is granted shall be given written notice

specifying the difference between the base flood elevation (BFE) and the elevation to which the structure is to be built and a written statement that the cost of flood insurance will be commensurate with the increased risk. Such notification shall be maintained with a record of all variance actions.

- The local Floodplain Administrator shall maintain the records of all appeal actions and report any variances to the Federal Emergency Management Agency (FEMA) upon request.
- Variances shall not be issued for unpermitted development or other development that is not in compliance with the provisions of this ordinance. Violations must be corrected in accordance with Section 9.2.8.5.e of this ordinance.

iii. **Considerations:** In passing upon such applications, the Board of Zoning Appeals shall consider all technical evaluations, all relevant factors, all standards specified in other sections of this ordinance and:

- The danger that material may be swept onto other lands to the injury of others;
- The danger to life and property due to flooding or erosion damage, and the safety of access to the property in times of flood for ordinary and emergency vehicles;
- The susceptibility of the proposed facility and its contents to flood damage and the effect of such damage on the individual owner;
- The importance of the services provided by the proposed facility to the community;
- The necessity to the facility of a waterfront location, where applicable;
- The availability of alternative locations, not subject to flooding or erosion damage, for the proposed use;
- The compatibility of the proposed use with existing and anticipated development, and the relationship of the proposed use to the Comprehensive Plan and floodplain management program for that area;
- The expected heights, velocity, duration, rate of rise, and sediment transport of the floodwaters and the effects of wave action, if applicable, expected at the site;
- The costs of providing governmental services during and after flood conditions including maintenance and repair of public utilities and facilities such as sewer, gas, electrical and water systems, and streets and bridges; and
- Agricultural structures must be located in wide, expansive floodplain areas, where no other alternative location for the agricultural structure exists. The applicant must demonstrate that the entire farm acreage, consisting of a contiguous parcel of land on which the structure is to be located, must be in the Special Flood Hazard Area and no other alternative locations for the structure are available.

iv. **Historic Structures:** Variances may be issued for the repair or rehabilitation of historic structures upon the determination that the proposed repair or rehabilitation will not preclude the structure's continued designation as a historic structure and the variance is the minimum necessary to preserve the historic character and design of the structure.

v. **Functionally Dependent Uses:** Variances may be issued for development necessary for the conduct of a functionally dependent use, provided the criteria of this Section are met, no reasonable alternative exist, and the development is protected by methods that minimize flood damage and create no additional threat to public safety.

vi. **Agricultural Structures:** Variances may be issued to wet floodproof an agricultural structure provided it is used solely for agricultural purposes. In order to minimize flood damages during the base flood and the threat to public health and safety, the structure must meet all of the conditions and considerations of Section 9.2.12.C.2.b.i, this section, and the following standards:

- Use of the structure must be limited to agricultural purposes as listed below:
  - Pole frame buildings with open or closed sides used exclusively for the storage of farm machinery and equipment;
  - Steel grain bins and steel frame corncribs;
  - General purpose barns for the temporary feeding of livestock that are open on at least one side;
  - For livestock confinement buildings, poultry houses, dairy operations, and similar livestock operations, variances may not be issued for structures that were substantially damaged. New construction or substantial improvement of such structures must meet the elevation requirements of Section 8.2.2.B of this ordinance.
- The agricultural structure must be built or rebuilt, in the case of an existing building that is substantially damaged, with flood-resistant materials for the exterior and interior building components and elements below the base flood elevation.
- The agricultural structure must be adequately anchored to prevent flotation, collapse, or lateral movement. All of the structure's components must be capable of resisting specific flood-related forces including hydrostatic, buoyancy, hydrodynamic, and debris impact forces. Where flood velocities exceed 5 feet per second, fast-flowing floodwaters can exert considerable pressure on the building's enclosure walls or foundation walls.
- The agricultural structure must meet the venting requirement of Section 8.2.2.D of this ordinance.
- Any mechanical, electrical, or other utility equipment must be located above the base flood elevation, plus any required freeboard, or be contained within a watertight, floodproofed enclosure that is capable of resisting damage during flood conditions in accordance with Section 8.2.1.E of this ordinance.
- The agriculture structure that comply with the floodway encroachment provisions of Section 8.2.2.E of this ordinance.
- Major equipment, machinery, or other contents must be protected. Such protection may include protective watertight floodproofed areas within the building, the use of equipment hoists for readily elevating contents, permanently elevating contents on pedestals or shelves above the base flood elevation, or determining that property owners can safely remove contents without risks to lives and that the contents will be located to a specified site out of the floodplain.

vii. **Findings:** Findings listed above shall be submitted to the BZA, in writing, and included in the application for a variance. Additionally, comments from the Department of Natural Resources, Land, Water, and Conservation Division, State Coordinator's Office, must be taken into account and included in the permit file.

D. APPEALS

An appeal from the decision of the Board of Zoning Appeals regarding a variance request may be made by an aggrieved party and shall be made to the Court of Common Pleas in the nature of certiorari. Any such petition to the Court of Common Pleas shall be filed with the court no later than 30 days after the applicant receives the written copy of the decision of the Board of Zoning Appeals.

E. LEGAL STATUS PROVISIONS

1. **Effect on Rights and Liabilities under the Existing Flood Damage Prevention Ordinance:** This Ordinance in part comes forward by re-enactment of some of the provisions of the flood damage prevention ordinance enacted March 23, 2011 and it is not the intention to repeal but rather to re-enact and continue to enforce without interruption of such existing provisions, so that all rights and liabilities that have accrued there under are reserved and may be enforced. The enactment of this ordinance shall not affect any action, suit or proceeding instituted or pending. All provisions of the flood damage prevention ordinance of Lancaster County enacted on March 23, 2011, as amended, which are not reenacted herein, are repealed.

2. **Effect upon Outstanding Building Permits:** Nothing herein contained shall require any change in the plans, construction, size or designated use of any building, structure or part thereof for which a building permit has been granted by the Building Official or authorized agents before the time of passage of this ordinance; provided, however, that when start of construction has not occurred under such outstanding permit within a period of 60 days subsequent to passage of this ordinance, construction or use shall be in conformity with the provisions of this ordinance.

9.2.13 SPECIAL EXCEPTIONS (SE)

Special exceptions are land uses that are generally compatible with the land uses permitted by right in a zoning district, but which require individual review of their location, design, and configuration so as to evaluate the potential for adverse impacts on adjacent property and uses. Special exceptions ensure the appropriateness of the use at a particular location within a given zoning district. Applications requiring a Special Exception Permit are noted in the Use Table – Section 2.5.3. Specific additional standards related to Special Exception Permit approval are located in Chapter 3.

A. APPLICATION PROCEDURES

1. **Process Type:** Quasi-Judicial.

2. **Pre-Application Meeting:** Every applicant for a Special Exception Permit is required to meet with the Administrator in a pre-application conference prior to the submittal of a formal application. The purposes of this conference are to provide additional information regarding the review process and assistance in the preparation of the application.

3. **Required Application Information:** An application for a Special Exception Permit may be filed by the owner of the property or by an agent specifically authorized by the owner to file such application. Each application for a Special Exception Permit shall contain, at a minimum, a Site Analysis, Preliminary Plat and Building Elevations for Design Review (may be waived by Administrator as appropriate). Other information necessary to show that the

use or structure complies with the standards set forth in this ordinance shall also be provided.

4. **Determination of Completeness:** The Administrator shall review the application to ensure that it is complete, prepare a report and recommendation on the application, and schedule the matter for a public hearing before the Board of Zoning Appeals.

B. REVIEW PROCESS

1. **Public Notification:** Level 1, 2, and 3.
2. **Neighborhood Meeting:** Optional.
3. **Public Hearing:** The Board of Zoning Appeals shall hold a hearing on the proposal. The applicant and other property owners likely to be materially affected by the application shall be given an opportunity to be heard.
4. **Board of Zoning Appeals Decision:** Following the public hearing, the Board of Zoning Appeals may approve, deny, or approve with conditions the application for a Special Exception Permit within 35 days of the date of the public hearing.
5. **Findings of Fact:** In addition to determining that the application meets all other requirements of this ordinance (no variances are permitted), the Board of Zoning Appeals must find the following:
   a. That the proposed special exception conforms to the character of the neighborhood, considering the location, type and height of buildings or structures and the type and extent of landscaping on the site;
   b. That adequate measures will be taken to provide ingress and egress so designed as to minimize traffic hazards and to minimize traffic congestion on the public roads;
   c. That adequate utilities (water, sewer, drainage, electric, etc.) are available for the proposed use;
   d. That the proposed use will not be noxious or offensive by reason of vibration, noise, odor, dust, smoke or gas;
   e. That the establishment of the proposed use will not impede the orderly development and improvement of surrounding property for uses permitted within the land development district; and
   f. That the establishment, maintenance and/or operation of the proposed use will not be detrimental to or endanger the public health, safety or general welfare.
   g. That the establishment will be operated in compliance with all local, state and federal laws and will not become a nuisance by creating criminal activity or public disturbance.
6. **Additional Conditions:** The Board of Zoning Appeals may place conditions on the use as part of the approval to assure that appropriate mitigation measures are associated with the use. The conditions shall become part of the Special Exception Permit approval and shall be included in the final site plan application.
7. **Revocation of Special Use Permits:** If at any time after a Special Exception Permit has been issued for any special use, the Board of Zoning Appeals finds that the conditions imposed and agreements made have not been or are not being fulfilled by the holder of a Special Exception Permit, the permit shall immediately be terminated and the operation of such a use discontinued. Any such "finding" shall be made in an open meeting of the Board in full compliance with the review process herein described, and the permit holder's right to due process shall be maintained. If a Special Exception Permit is terminated for any reason, it may be reinstated only after a public hearing is held.

C. EFFECT OF DECISIONS

1. **Appeals:** An appeal from the decision of the Board of Zoning Appeals regarding a Special Exception Permit application may be made by an aggrieved party and shall be made to the Circuit Court of Lancaster County in the nature of certiorari. Any such petition to the Court of Common Pleas shall be filed with the court no later than 30 days after the applicant receives the written copy of the decision of the Board of Zoning Appeals.

2. **Permit Validity:** Following the approval of a Special Exception Permit the applicant shall have 2 years to obtain a building permit or the Special Exception Permit shall become void. Such permit shall remain valid as long as a valid building permit exists for the project.

3. **Permit Extension:** The Board of Zoning Appeals may grant a single extension of this time period of up to 6 months upon submittal by the applicant of sufficient justification for the extension.

9.2.14 APPEAL OF ADMINISTRATIVE DECISIONS

A. APPLICABILITY

This process is hereby established to provide an appeal process for parties aggrieved by any administrative order, requirement, decision or determination, made by an administrative officer charged with enforcing the provisions of this ordinance.

B. FILING PROCEDURES

1. **Process Type:** Quasi-Judicial.

2. **Filing Procedure:** An appeal of an administrative decision may be taken by any person aggrieved (or by their authorized agent) or may be taken by any officer, department, board or bureau of the County. Such an appeal shall be made to the County within 30 days of the receipt of the written notice of decision from the County.

3. **Stay of Proceedings:** The filing of an appeal shall stay all proceedings in furtherance of the contested action unless the Administrator certifies that, in his/her opinion, by reason of facts stated in the certification, such a stay would cause imminent peril to life and property. In such a case, proceedings shall not be stayed except by restraining order granted by the Court of Common Pleas on notice to the administrative official from whom the appeal is taken with due cause shown.

4. **Required Application Information:** All information relevant to describing the applicant's appeal to the Board of Zoning Appeals is required. The Administrator shall similarly prepare a report detailing the regulations and interpretation behind the matter being appealed and their reason for their decision.

5. **Public Notification:** Level 1 and 3.

C. FORMAL REVIEW

1. Upon receiving the application, the Board shall conduct a public hearing on the matter. Any party may appear in person or be represented by an agent at the hearing.

2. After conducting the public hearing, the Board shall adopt an order reversing or affirming, wholly or in part, or modifying the order requirements, decision or determination in question. It shall take a 4/5ths vote of the Board to reverse or modify the contested action.

3. The Board, in making its ruling, shall have all the powers of the Administrator from whom the appeal is taken, and may issue or direct the issuance of a permit.

4. The decision of the Board must be in writing and permanently filed in the minutes of that reviewing body as a public record. All findings of fact and conclusions of law must be

separately stated in final decisions or orders of the Board, which must be delivered to parties of interest by certified mail.

D. APPEALS

Any appeal from a decision of the Board of Zoning Appeals may be made by an aggrieved party and shall be made to the Circuit Court of Lancaster County in the nature of certiorari. Any such petition shall be filed no later than 30 days after the applicant receives a written copy of the decision of the Board of Zoning Appeals.

9.2.15 TEXT AMENDMENTS AND REZONINGS

The County Council may from time to time amend any part of the text of this ordinance or amend the Zoning Map of the County.

A. APPLICATION PROCEDURES

1. **Process Type:** Legislative.
2. **Applicants:** Map or text amendments may be submitted by any of the following:
   - The County Council.
   - The Planning Commission.
   - The Board of Zoning Appeals.
   - The Planning Department.
   - Any owner of property within the land use jurisdiction of the County.
3. **Pre-Application Procedure:** Before filing a petition of an amendment, an applicant (if an owner requesting a map amendment) shall meet with the Administrator to discuss the proposed amendment or request and to become more familiar with the applicable requirements and approval procedures of the County.
4. **Content of Application:** A petition for an amendment to the County's official land development map or text shall be filed on a form provided by the Administrator. Such a petition shall contain all the information required on the form and must be determined to be complete by the Administrator prior to advancing it through the review process.
5. **Determination of Completeness:** Staff shall review an application for amendment to determine if it is complete. If an application is complete, the Administrator shall schedule the matter for consideration at a meeting of the Planning Commission. The Administrator shall prepare a staff report and recommendation on the matter.

B. REVIEW BY PLANNING COMMISSION

1. **Public Notification (Prior to Planning Commission):** Levels 1 and 2, are required for all amendments to the UDO. Level 3 is required for all amendments to the UDO that involve a specific parcel of land. Such actions include, but are not limited to, map amendments (rezonings), amendments to zoning district boundaries, and the application of new overlay zones.
2. **Neighborhood Meeting:** Optional.
3. **Consideration by Planning Commission:** The Planning Commission shall conduct a public hearing and receive public input on the proposed amendment and shall provide a written recommendation to the County Council regarding whether to approve or deny each proposed amendment within 35 days of its first consideration on the matter. The recommendation shall address consistency with the Comprehensive Plan and other matters deemed appropriate by the Commission. A recommendation for denial of the petition shall not preclude consideration or approval of the proposed amendment by the County Council.

C. CONSIDERATION BY COUNTY COUNCIL

1. **Public Notification (Prior to Planning Commission):** Level 1 and 2 are required for all amendments to the UDO. Level 3 is required for all amendments to the UDO that involve a specific parcel of land. Such actions include, but are not limited to, map amendments (rezonings), amendments to zoning district boundaries, and the application of new overlay zones.

2. **Consideration by the County Council:** Following receipt of a recommendation or appeal of a proposed amendment, the County Council shall conduct a public hearing on the matter. Upon reviewing all of the pertinent information, the County Council may:

   a. Adopt the proposed amendment.

   b. Adopt the proposed amendment with modifications.

   c. Reject the proposed amendment.

   d. Refer the proposed amendment back to the Planning Commission for further consideration.

   e. Refuse to take any further action.

D. WAITING PERIOD FOR SUBSEQUENT APPLICATIONS

When an application for an amendment has been denied by the County Council, no application shall be considered on the same zoning amendment request affecting the same property or part thereof within the next 12 months after denial. This 12 month period does not apply to action initiated by either the County Council or Planning Commission. (Ord. No. 2019-1599, 8.26.19)

9.2.16 CONDITIONAL USE

The County Council may from time to time approve Conditional Use permits.

A. APPLICATION PROCEDURES

1. **Process Type:** Legislative.

2. **Applicants:** Conditional Use permits may be submitted by any of the following:

   - Any owner of property within the land use jurisdiction of the County.

3. **Pre-Application Procedure:** Before filing a petition for a Conditional Use, an applicant shall meet with the Administrator to discuss the proposed Conditional Use request and to become more familiar with the applicable requirements and approval procedures of the County.

4. **Content of Application:** A petition for a Conditional Use shall be filed on a form provided by the Administrator. Such a petition shall contain all the information required on the form and must be determined to be complete by the Administrator prior to advancing it through the review process.

5. **Determination of Completeness:** Staff shall review an application for a Conditional Use to determine if it is complete. If an application is complete, the Administrator shall schedule the matter for consideration at a meeting of the Planning Commission. The Administrator shall prepare a staff report and recommendation on the matter.

B. REVIEW BY PLANNING COMMISSION

1. **Public Notification (Prior to Planning Commission):** Levels 1, 2, and 3 are required for Conditional Use applications.

2. **Neighborhood Meeting:** Optional.

3. **Consideration by Planning Commission:** The Planning Commission shall conduct a public hearing and receive public input on the proposed use and shall provide a written recommendation to the County Council regarding whether to approve or deny the proposed use within 35 days of its first consideration on the matter. The recommendation shall address consistency with Chapter 5 and the surrounding neighborhood and other matters deemed appropriate by the Commission. A recommendation for denial of the petition shall not preclude consideration or approval of the proposed use by the County Council.

C. CONSIDERATION BY COUNTY COUNCIL

1. **Public Notification (Prior to Planning Commission):** Level 1 and 2 are required for all conditional uses to the UDO. Level 3 is required for all amendments to the UDO that involve a specific parcel of land. Such actions include, but are not limited to Conditional Use.

2. **Consideration by the County Council:** Following receipt of a recommendation of a proposed amendment, the County Council may:

   a. Approve the proposed use.

   b. Approve the proposed use with restrictions.

   c. Reject the proposed use.

   d. Refer the proposed use back to the Planning Commission for further consideration.

   (Ord. No. 2018-1521, 7.16.18)

D. WAITING PERIOD FOR SUBSEQUENT APPLICATIONS

When an application for a use has been approved or denied by the County Council, no application shall be considered on the same issue within the next 12 months after approval or denial.

9.2.17 VESTED RIGHTS

A. ESTABLISHMENT OF VESTED RIGHTS

1. A vested right is established for two years upon the approval of a Site Specific Development Plan.

2. The landowner of real property with a vested right may apply in writing before the end of the vesting period or within 30 days after the expiration of the vesting period or any extension thereof but not thereafter to the Lancaster County Planning Commission for an annual one-year extension of the vested right. The Planning Commission must approve applications for at least five annual extensions of the vested right if a timely and proper application has been filed with the Planning Commission unless an amendment to the UDO has been adopted that prohibits approval. If no timely and proper written application is made by the landowner to the Planning Commission for an annual extension, the vesting period or annual extension applicable to such real property shall expire at the end of the vesting period or the annual extension thereof.

3. The Planning Commission shall not provide for or approve the establishment of a two-year vested right in a conditionally approved site specific development plan. No two-year vested right is established in a conditionally approved site specific development plan until such vested right is specifically and expressly approved by the Planning Commission in writing when a site specific development plan is approved without conditions.

4. The Planning Commission shall not approve the establishment of a vested right in an approved phased development plan but may approve and establish a vested right in any

phase of a phased development plan which conforms to, complies with, and satisfies all state statutes and county codes and ordinances including, but not limited to, planning, zoning, subdivisions, stormwater management and control, building, fire, water and sewer, road, and other state and county codes applicable to such development.

5. No vested right in a site specific development plan shall attach or be established until plan applications and required documents have been received, all required approvals have been given or granted, and all fees have been paid in accordance with the procedures outlined in this code. No vested right attaches or is established until a final decision has been rendered favorable to the applicant on all administrative appeals.

6. The Lancaster County Board of Zoning Appeals is not authorized to grant or approve a vested right and no vested right shall be established, created, or accrue as a result of any decision of the Board of Zoning Appeals.

B. CONDITIONS AND LIMITATIONS

1. A vested right established in Chapter 9-and in accordance with the UDO is subject to the following conditions and limitations:

a. The form and content of a site specific development plan submitted by a landowner must conform and comply with county planning, zoning, subdivision, stormwater management and sediment control, building, electrical, mechanical, life safety, fire, water and sewer, road, and other codes, ordinances, and regulations applicable to such development or development plan;

b. No vested right in a site specific development plan shall be established except in conformity with county planning, zoning, subdivision, stormwater management and sediment control, building, electrical, mechanical, life safety, fire, water and sewer, road, and other land use codes, ordinances, and regulations;

c. If the Planning Commission approves a vested right for one or more phases of a phased development plan, a site specific development plan shall be required for approval with respect to each phase in accordance with regulations in effect at the time of vesting;

d. No vested right is established under a conditionally approved site specific development plan or conditionally approved phased development plan. Any approved site specific development plan or approved phased development plan or phase thereof may be terminated by the Planning Commission upon its determination, following notice and a public hearing, that the landowner has failed to meet the terms of the approval; and

e. A vested right established in accordance with the provisions of Chapter 9 shall be vested upon approval by the Planning Commission of the site specific development plan or specific phase of a phased development plan that authorizes the developer or landowner to proceed with investment in grading, installation of utilities, streets, and other infrastructure and to undertake other specific expenditures necessary to prepare for application for a building permit. No developer or landowner shall proceed with investment in grading, installation of utilities, streets or other infrastructure, or shall undertake other significant expenditures necessary to prepare for application for a building permit before a site specific development plan or phased development plan or phase thereof authorizing such improvements and expenditures has been approved by the Planning Commission. No investment in grading, installation of utilities, streets or other infrastructure, or other significant expenditures shall give rise to or establish a vested right until the Planning Commission has approved the site specific development plan or phased development plan or phase thereof that authorizes the developer or landowner to proceed with

improvements or undertake other significant expenditures on the real property which is proposed for development.

2. A site specific development plan for which a variance, regulation, or special exception is necessary, does not qualify and may not claim or receive vested right status unless and until the variance, regulation, or special exception is obtained and the site specific development plan has been approved without conditions or exceptions. A phased development plan for which a variance, regulation, or special exception is necessary does not qualify and may not obtain a vested right until the variance, regulation, or special exception is obtained and the phase of the phased development plan has been approved without condition or exception.

3. A vested right for a site specific development plan expires two years after vesting; provided, however, that the landowner of real property with a vested right may apply to the Planning Commission before the end of the vesting period or within 30 days after the expiration of the vesting period or any extension thereof, but not thereafter, for an annual extension of the vested right for a period of one year. If a timely and proper written application is made, the Planning Commission must approve applications for no more than five successive annual extensions unless an amendment to the UDO has been adopted that prohibits approval of such annual extension applications. The Planning Commission shall designate the vesting point for a phased development plan as the date of approval of each phase of the phased development plan. The Planning Commission may extend the time for a vested site specific development plan to a total of five years upon a determination that there is just cause for the extension and that the public interest is not adversely affected. Upon expiration of a vested right, a building permit may be issued for development only in accordance with the applicable UDO regulations.

4. A vested site specific development plan or a vested phased development plan which has been approved by the Planning Commission may be amended if the amendments are approved by the Planning Commission pursuant to the provisions of the applicable UDO.

5. A validly issued building permit does not expire or is not revoked upon expiration or termination of a vested right, except for public safety reasons or as prescribed by the applicable building code. Vested right to a site specific development plan or a phase of a phased development plan may be revoked by the Planning Commission upon its determination, after notice and a public hearing, that there was a material misrepresentation by the landowner or substantial non-compliance with the terms and conditions of the original or amended approval.

6. A vested site specific development plan or a vested phase of a phased development plan is subject to later enacted Federal, State, or local laws or ordinances adopted to protect public health, safety, and welfare, including, but not limited to, building, fire, plumbing, electrical and mechanical codes, and non-conforming structure and use regulations which do not provide for the grandfathering of the vested right. The issuance of a building permit vests the specific construction project authorized by the building permit to the building, fire, plumbing, electrical and mechanical codes in force at the time of the issuance of the building permit.

7. A vested site specific development plan or vested phased development plan or phase thereof is subject to later local governmental overlay zoning that imposes site plan-related requirements but does not affect allowable types, height as it affects density or intensity of uses, or density or intensity of uses.

8. A change in the zoning district designation or land use regulations made subsequent to vesting that affects real property does not operate to affect, prevent, or delay development of the real property under a vested site specific development plan or

vested phase of a phased development plan without the consent of the landowner.

9. The Lancaster County Council; the Planning Commission; and local zoning, planning, and codes officials must not require a landowner to waive his or her vested rights as a condition of approval or conditional approval of a site specific development plan or phased development plan or phase thereof.

C. NATURE OF VESTED RIGHT

A vested right pursuant to this subchapter or the Vested Rights Act, being S.C. Code § 6-29-1520 *et seq.*, is not a personal right but attaches to and runs with the applicable real property. The landowner and all successors to the landowner who secure a vested right pursuant to the Vested Rights Act or this subchapter may rely upon and exercise the vested right for its duration, subject, however, to applicable Federal, State, and local laws adopted to protect public health, safety, and welfare, including, but not limited to, building, fire, plumbing, electrical and mechanical codes, and non-conforming structure and use regulations which do not provide for grandfathering of the vested right. Nothing contained herein shall preclude judicial determination that a vested right exists or does not exist pursuant to other statutory provisions.

D. LANDOWNER RIGHTS DEEMED VESTED

1. The landowner's rights are considered vested in the types of land use and density or intensity of uses defined in the development plan, and the vesting is not affected by later amendments to the UDO if the landowner:

a. Obtains or is the beneficiary of a significant affirmative government act that remains in effect allowing development of a specific project;

b. Relies in good faith on the significant affirmative government act; and

c. Incurs significant obligations and expenses in the diligent pursuit of the specific project in reliance on the significant affirmative government act.

2. For purposes of this section, the following are significant affirmative governmental acts allowing development of a specific project:

a. The Lancaster County Council has accepted exactions or issued conditions that specify a use related to a zoning amendment;

b. The Lancaster County Council has approved an application for a rezoning for a specific use;

c. The Lancaster County Council or Planning Commission has approved an application for a density or intensity of use;

d. The Lancaster County Council or Planning Commission has granted a use permit with conditions;

e. The Lancaster County Council or Planning Commission has approved a variance;

f. The Planning Commission has approved a preliminary subdivision plat, site plan, or plan of phased development for the landowner's property and the applicant diligently pursued approval of the final plat or plan within a reasonable period of time under the circumstances; or

g. The Planning Commission has approved a final subdivision plat, site plan, or plan of phased development or phase thereof for the landowner's property.

9.2.18 DEVELOPMENT AGREEMENTS

A. APPLICABILITY (Ord. No. 2019-1623, 12.9.19)

1. Development Agreements are permitted in all residential zoning districts and in association with all residential uses or developments regardless of zoning districts.

2. Development Agreements are required for all land development projects that wish to develop property utilizing the Cluster Subdivision Overlay District.

3. Development Agreements are required for all land development projects that seek rezoning to a mixed-use zoning district.

4. At the time a developer makes application for a development agreement, the developer shall submit to the clerk:

   a. A letter stating that the developer is seeking a development agreement;

   b. A proposed agreement containing, at a minimum, the information required by Section 9.2.18.C; and

   c. A check as required by Section 9.2.18.F.

5. Upon receipt by the clerk, the clerk shall provide copies of the developer's letter and proposed agreement to each member of the council.

6. Council may, in its discretion:

   a. Provide for the appointment of an ad hoc committee of the council, to review and make recommendations to the council on the content and disposition of the proposed agreement;

   b. Request the review by and comment of any county agency, department, board or commission and such agency, department, board or commission shall, upon request of the council, make appropriate resources and personnel available to the council to facilitate the council's review and consideration of the proposed agreement;

   c. Make arrangements as may be necessary or proper to enter into agreements, including negotiating and drafting of agreements; and

   d. Engage such consultants and professional service providers as may be needed including, but not limited to, engineering, financial, legal or other special services.

7. The clerk shall forward a copy of the proposed agreement to the planning commission. The planning commission shall review the proposed agreement and make recommendations to the council not later than the time the planning commission makes its recommendations to the council on any proposed rezoning sought by the developer, if any rezoning request is applicable.

8. At least two public hearings on the proposed agreement shall be conducted. One of the two required public hearings shall be held by the planning commission and the other shall be held by council. Not less than 15 days' notice of the time and place of each hearing shall be published in at least one newspaper of general circulation in the county. The notices published for the public hearings must include the information required to be published by Code Section 6-31-50(B).

9. No agreement may be entered into by the county unless the agreement has been approved by council through the adoption of an ordinance. Any agreement approved by council must contain the information required by Section 9.2.18.C.

B. FILING PROCEDURES

1. **Process Type:** Legislative.
2. **Public Notification:** Level 1 and 2.

C. REQUIRED AGREEMENT INFORMATION (Ord. No. 2019-1623, 12.9.19)

The proposed agreement filed by the developer, as provided in Section 9.2.18.A, must include:

1. A legal description of the property subject to the agreement and the names of the property's legal and equitable owners;
2. The duration of the agreement which must comply with Code Section 6-31-40;
3. A representation by the developer of the number of acres of highland contained in the property subject to the agreement (minimum 25-acres highland) (Ord. No. 2019-1623, 12.9.19);
4. The then current zoning of the property and a statement, if applicable, of any proposed rezoning of the property;
5. The development uses that would be permitted on the property pursuant to the agreement, including population densities, building intensities and height;
6. A description of the public facilities that will service the development, including who provides the facilities, the date any new facilities, if needed, will be constructed, and a schedule to assure public facilities are available concurrent with the impacts of the development construction timeline for those facilities. If the agreement provides that the county shall provide certain public facilities, the agreement shall provide that the delivery date of the public facilities will be tied to defined completion percentages or other defined performance standards to be met by the developer;
7. A description, where appropriate, of any reservation or dedication of land for public purposes and any provisions to protect environmentally sensitive property as may be required or permitted pursuant to laws in effect at the time of entering into the agreement;
8. A description of all local development permits approved or needed to be approved for the development of the property together with a statement indicating that the failure of the agreement to address a particular permit, condition, term, or restriction does not relieve the developer of the necessity of complying with the law governing the permitting requirements, conditions, terms or restrictions;
9. A finding that the development permitted or proposed is consistent, or will be consistent by the time of execution of the agreement, with the county's comprehensive plan and land development regulations;
10. A description, where appropriate, of any provisions for the preservation and restoration of historic structures;
11. A development schedule including commencement dates and interim completion dates at no greater than five year intervals;
12. If more than one local government is made party to the agreement, a provision stating which local government is responsible for the overall administration of the agreement;
13. A listing of the laws and land development regulations that will apply to the development of the property subject to the agreement, including citation to specific ordinance numbers or portions of the County Code of Ordinances or both;

14. A provision, consistent with Code Section 6-31-80, addressing the circumstances under which laws and land development regulations adopted subsequent to the execution of the agreement apply to the property subject to the agreement;

15. A provision stating whether the agreement continues to apply to the property or portions of it that are annexed into a municipality or included in a newly-incorporated area and, if so, that the provisions of Code Section 6-31-110 apply;

16. A provision that:

a. The agreement may be amended or cancelled by mutual consent of the parties to the agreement or their successors in interest;

b. If the amendment constitutes a major modification of the agreement, the major modification may occur only after public notice and a public hearing by the council, provided, that, for purposes of this subitem, a "major modification" means: (i) significant changes to the development scheduled time-frames set forth in the agreement; (ii) density modifications; (iii) land use changes; (iv) any major miscalculations of infrastructure or facility needs which create demand deficiencies; or (v) any other significant deviation from the development as contained in the agreement;

c. If the developer requests an amendment to the development schedule, including commencement dates and interim completion dates, then the dates must be modified by the council if the developer is able to demonstrate and establish that there is good cause to modify those dates; and

d. The agreement must be modified or suspended as may be necessary to comply with any state or federal laws or regulations enacted after the agreement is entered into which prevents or precludes compliance with one or more of the provisions of the agreement;

17. A provision for periodic review, consistent with the provisions of Section 9.2.18.G;

18. A provision addressing the effects of a material breach of the agreement, consistent with the provisions of Section 9.2.18.E;

19. A provision that the developer, within 14 days after the county enters into the agreement, will record the agreement with the county clerk of court;

20. A provision that the burdens of the agreement are binding upon, and the benefits of the agreement shall inure to, all successors in interest to the parties to the agreement; and

21. A provision addressing the conditions and procedures by which the agreement may be assigned; and

22. For properties proposed to be rezoned to one of the Mixed-Use Districts in UDO Chapter 3, a complete Mixed-Use District Master Development Plan prepared in accordance with UDO Chapter 9.2.9(B); and

23. For properties proposed to be rezoned to a non-mixed use residential district, a conceptual master plan showing the overall design intent of the project including, but not limited to subject property boundary, proposed street and pedestrian network, proposed lots, proposed open space and amenity features, preliminary stormwater improvements, environmentally sensitive areas, and any offsite improvements; and

24. A traffic impact analysis prepared in accordance with UDO Chapter 6.8 and SCDOT standards.

D. OPTIONAL AGREEMENT INFORMATION

The agreement approved by the council must include the information listed in Section 9.2.18.C and, in addition, may include:

1. A description of any conditions, terms, restrictions, or other requirements determined to be necessary by the council for the public health, safety, or welfare of the county's citizens;
2. Requirements that the entire development or any phase of it be commenced or completed within a specified period of time;
3. Defined performance standards to be met by the developer;
4. Identification of any laws or land development regulations anticipated to be adopted by the council subsequent to the execution of the agreement and made applicable to the property subject to the agreement;
5. Any other matter not inconsistent with the Act not prohibited by law.

E. BREACH OF AGREEMENT

1. If, as a result of the periodic review provided for in Section 9.2.1~~7~~8.G, the zoning administrator finds and determines that the developer has committed a material breach of the terms or conditions of the agreement, the zoning administrator shall serve notice in writing, within 30 days after the periodic review, upon the developer setting forth with reasonable particularity the nature of the breach and the evidence supporting the finding and determination, and providing the developer 30 days to respond with a corrective action plan to cure the material breach. The zoning administrator may approve a corrective action plan which provides for a cure of the material breach in one year or less. Corrective action plans providing for a cure of the material breach in excess of one year must be reviewed and approved by the council. The zoning administrator and council may establish a time for the cure of the material breach different from that proposed by the developer.
2. If the developer fails to respond to the zoning administrator's notice within 30 days or cure the material breach within the time approved by the zoning administrator or council, the council unilaterally may terminate or modify the agreement, provided, that the council has first given the developer the opportunity:
   a. To rebut the finding and determination; or
   b. To consent to amend the agreement to meet the concerns of the council with respect to the findings and determinations.
3. The failure of a developer to meet a commencement or completion date shall not, in and of itself, constitute a material breach of the agreement, but must be judged based on the totality of the circumstances.

F. COST OF CONSIDERATION

The developer must pay a fee, to defray the cost of consideration of the proposed agreement by the council, and the amount of the fee shall be determined in the following manner: $25.00 per acre for each acre of highland proposed to be included in the agreement with the total fee not to exceed twenty thousand dollars. The developer shall pay the fee by check made payable to Lancaster County and the check shall be included with the material submitted to the clerk as provided in Section 9.2.1~~7~~8.A. The fee shall be deposited in a special account and used at the direction of the council only for the purpose of defraying expenses incurred by the county in the review and consideration of the proposed agreement. Any unused fee shall be returned to the developer within six months of the county's disposition of the proposed agreement.

G. REVIEW BY ADMINISTRATOR

At least every 12 months, the zoning administrator must review compliance with the agreement by the developer. At the time of review the developer must demonstrate good faith compliance with the terms of the agreement.

9.3 NONCONFORMITIES

9.3.1 PURPOSE AND APPLICABILITY

The purpose of this section is to regulate and limit the continued existence of uses and structures established prior to the effective date of this ordinance (or any subsequent amendment) that do not conform to this ordinance. Any nonconformity created by a change in the classification of property or the text of these regulations shall also be regulated by the provisions of this section. The provisions of this chapter are intended to limit substantial investment in nonconformities and to bring about their eventual elimination and/or lessen their impact upon surrounding conforming uses in order to preserve the integrity of the areas in which they are located. The thresholds established in this chapter at which nonconforming uses or structures must be brought into compliance shall apply to the cumulative expansion, reconstruction or other modification of nonconforming uses or structures from the condition in which they existed on the date of adoption of this ordinance.

9.3.2 GENERAL PROVISIONS

A. APPEALS AND MODIFICATIONS

1. **Board of Zoning Appeals:** The Board of Zoning Appeals shall hear and determine appeals from administrative decisions of the zoning administrator, grant or deny appeals from administrative decisions of the zoning administrator, grant or deny applications for variances, and grant or deny applications for special exception.

2. **Criteria for Approval:** The Board of Zoning Appeals may only grant a change for a nonconforming use or replacement of a nonconforming structure which has been destroyed after having first held a public hearing and having determined that:

   a. Said change will be more suitable and appropriate for the lot(s) on which it is located than the existing situation; and,

   b. The proposed change will have a less harmful effect than the existing situation on the properties surrounding the lot(s) in question; and,

   c. The decision to grant the change will be in harmony with the general purpose and intent of this ordinance and will not be injurious to the neighborhood or otherwise be detrimental to the public welfare.

   d. **Conditions of Approval:** The Board of Zoning Appeals, in granting such changes, may prescribe appropriate conditions and safeguards in conformity with this ordinance. Violation of such conditions and safeguards, when made a part of the terms upon which the change was granted, shall be deemed a violation of this ordinance and shall be subject to enforcement provisions Violations and Penalties.

B. UNSAFE STRUCTURES

1. **Deficiencies Due to Lack of Maintenance:** Any structure or other development of land, or portion thereof, devoted to a nonconforming use or having a nonconforming feature that is declared unsafe by the building inspector because of lack of repairs and maintenance shall not be restored, repaired, reconstructed, or used except in conformity with the provisions of this ordinance.

2. **Other Deficiencies:** Any structure or other development of land, or portion thereof, devoted to a nonconforming use or having a nonconforming structure that is declared unsafe by the building inspector, but not because of lack of repairs and maintenance, may be repaired and restored subject "Schedule of Repairs" shall be submitted to the Administrator within 30 days of notice.

C. DISCONTINUANCE

A nonconforming use of a building or premises which has been discontinued shall not thereafter be returned to such nonconforming use except in accordance with the provisions of this section.

1. **Determination of Discontinuance:** A nonconforming use shall be presumed discontinued when any of the following has occurred:

   a. The owner has, in writing or by public statement, indicated intent to abandon the use.

   b. A conforming use has replaced the preceding nonconforming use. All of the buildings or structures on the subject property housing the nonconforming use have been removed.

   c. The owner has physically changed the building or structure, or its permanent equipment, in such a way as to clearly indicate a change in use or activity to something other than the nonconforming use.

   d. Any basic utilities including water, electric and sewer service are disconnected by the utility provider.

   e. The property, structure or use has been vacant or inactive for a continuous period of more than 180 days.

      i. This may be implied from acts or the failure to act, including, but not limited to: the removal of and failure to replace the characteristic equipment and furnishings; lack of utility consumption necessary to maintain the use at an operable level; documented vacancy; or other circumstances.

      ii. If operations have ceased for more than 180 consecutive days, the presence of characteristic equipment and furnishings is not, in and of itself, sufficient to establish the continuity/operation of the use.

      iii. The mere vacancy of a structure for a period exceeding 180 consecutive days that was initially constructed as a single-family dwelling and whose most recent use was as a single-family dwelling shall not constitute a discontinuance of the use.

9.3.3 NONCONFORMING PLANS

A. APPROVED SITE SPECIFIC PLANS

1. **Previously-Approved Plans Grandfathered:** Any site specific plan (including but not limited to master plans, preliminary plats, final plats, special use permit plans) for the development of property and/or construction of a building which has been submitted as part of a complete application submittal to Lancaster County for development and/or construction, but does not conform to this ordinance and has not expired, may be developed and/or constructed in accordance with the ordinance, rules, and regulations, including any conditions imposed upon approval. Any plan approved prior to the adoption of this ordinance, but which conforms to its provisions, shall be administered, interpreted, amended and implemented in accordance with the provisions of this ordinance. Any conditions imposed as part of a previously-approved Special Use Permit or Conditional Use Permit shall continue as approved. Approved Subdivision Preliminary Plats, with or without multi-year phasing schemes, shall continue to regulate the development as approved as long as sufficient progress is made according to the terms of the ordinance under which the plans were approved.

2. **May Choose New Ordinance:** A property owner with an approved site specific plan, as identified above, may elect to develop such property and/or construct such building in accordance with the terms and provisions of this ordinance in lieu of the rules and regulations upon which the plan was approved. The Administrator shall notify the property

owner in writing of any additional required procedures or modifications which may be necessary in order for the plan to conform to the ordinance.

3. **Amendments or Modifications of Previously-Approved Plans:** Any amendment or modification to an approved site specific plan, which would have required approval pursuant to the ordinance, the rule or regulation by which the plan was originally approved, shall be reviewed and considered in accordance with the terms and provisions of this ordinance as if it were an amendment or modification to a plan originally approved under this ordinance.

4. **Maximum Build-Out Period:** If construction is not begun under such an outstanding permit within a period of one year subsequent to the passage of this ordinance, or where it has not been completed within 2 years subsequent to passage of this ordinance, any further construction or use shall be in conformity with the provisions of this ordinance.

B. VESTED RIGHTS

This section does not prohibit the exercise of any vested right established by common law ordinance or statute.

9.3.4 NONCONFORMING LOTS

A. DEFINITION AND APPLICABILITY

A nonconforming lot is a lot that was lawfully created prior to the effective date of this ordinance, but that does not meet the dimensional requirements of Chapter 2 for the zoning district in which it is located. A nonconforming vacant lot of record is one that was recorded by plat or description in the Office of the Register of Deeds of Lancaster County prior to the adoption of this chapter or prior to the time that the lot was brought into the County's jurisdiction.

B. STANDARDS

1. **Lot May Be Developed:** A nonconforming vacant lot may be developed for any of the uses permitted by these regulations in the district in which it is located, provided that any use, development, required feature (parking, buffers, etc.), and/or structure meets all applicable yard and setback requirements for the district in which the lot is located A variance shall not be required for a substandard lot width or lot size for such lots of record.

2. **Lots to Be Combined if Possible**

   a. A nonconforming vacant lot shall not be developed if it can be combined with an adjoining lot under the same ownership on or after the effective date of these regulations in order to create a single conforming or substantially conforming lot. For the purposes of this section, "adjoining" shall be deemed to mean the sharing of one or more common lot lines and access to both lots can be provided by the same street without crossing that street. All other minimum requirements for the particular land development district and proposed use must be met or a variance obtained from these requirements through an action of the Board of Zoning Appeals. This shall include meeting the requirements for additional lot size for increased densities of residential development (duplexes, multi-family dwellings, etc.).

   b. For lots that are nonconforming because they do not meet the minimum required lot width or square footage requirements, the above combination or recombination of lots shall not be required if the lot is no less than 90 percent of the minimum requirements.

   c. Where a nonconforming lot was created by public taking action or as a result of a court order, the above combination or recombination of lots shall not be required.

3. **Exceptions for Previously Approved Plats:** A nonconforming lot may be developed if, at the effective date of this ordinance, the lot is located in (i) a subdivision that had received

preliminary plat approval; or (ii) a subdivision in which had received final plat approval.

4. **Existing Structures on N on-Conforming Lots:** Any structure on a nonconforming occupied lot may be occupied, without expansion, by a conforming use or may be improved or expanded in accordance with the standards listed in this section. Structural alterations or remodeling of structures on nonconforming lots required by an authorized public official shall be permitted. Routine maintenance shall also be permitted so long as no expansion of the nonconformity occurs as a result of the maintenance.

5. **Expansion of Structures:** Any improvement or expansion of any structure on a nonconforming occupied lot must comply with all other minimum requirements of this ordinance or a variance must be obtained from these requirements through an action of the Board of Zoning Appeals. This shall include meeting the requirements for additional lot size for increased densities of residential development (duplexes, multi-family dwellings, etc.).

9.3.5 NONCONFORMING USES & STRUCTURES

A. DEFINITION AND APPLICABILITY

1. **Nonconforming Use:** A nonconforming use is a use of land, buildings, or structures that was lawfully established prior to the effective date of this ordinance, or a subsequent amendment thereto, but does not conform to the use regulations of Chapter 2 for the zoning district in which it is located. This definition includes open uses of land (e.g., storage yards and golf driving ranges) as well as the structures that contain nonconforming uses. The nonconformity may result from the adoption of this ordinance or any subsequent amendment.

2. **Nonconforming Structure:** A nonconforming structure is a physical feature or characteristic of a use, building, structure, or other development of land that was lawfully established prior to the effective date of this ordinance, but does not conform to dimensional, design, locational, or other requirements of this ordinance. This also includes nonconforming features such as buffers, landscaping, mechanical and utility structures, and parking. The nonconformity may result from adoption of this ordinance or any subsequent amendment.

B. STANDARDS FOR NONCONFORMING USES

1. **Continuation Permitted:** Any legally-established nonconforming use may be continued subject to the standards listed in this chapter. Expansions of such uses are not permitted. Once a nonconforming use is discontinued it may not later be reestablished or converted to any other nonconforming use.

2. **Expansion of Use:** Except as otherwise stated below, no building or structure devoted to a nonconforming use shall be enlarged, extended, reconstructed, moved, or structurally altered unless such building or structure is thereafter devoted to a conforming use. However, routine maintenance of any structure containing a nonconforming use is permitted.

3. **Damage or Destruction**

   a. When a building or structure devoted to a nonconforming use is damaged to the extent of more than 60 percent of the property's "total improvements full market value" as shown on the County tax records at the time of such damage, such a building, if restored, shall thereafter be devoted to conforming uses.

   b. If a building or structure devoted to a nonconforming use is damaged to a lesser extent than designated above, it may be repaired and continued in accordance with this ordinance provided that any such repair does not increase the degree of any nonconformance and a building permit for the reconstruction or repair work is

obtained within 180 days of the date of such damage.

c. The Administrator is authorized to grant in writing one or more extensions of time for periods not more than 180 days each. The extension shall be requested in writing and a justifiable cause must be demonstrated

C. STANDARDS FOR NONCONFORMING STRUCTURES

1. **Continuation Permitted:** Any legally-established nonconforming structure may be continued subject to the standards listed in this section. However, once a nonconforming structure is made conforming, it may not later be altered, modified or expanded in violation of this ordinance.

2. **Expansions of Structure:** A nonconforming principal building may be enlarged, extended, or structurally altered only if such enlargement, extension, or structural alteration complies with all of the following requirements:

   a. The use of the building must be a conforming use or a single-family residential use;

   b. The enlargement, extension, or structural alteration may extend or project no further than the legally-established building line(s) of the subject building;

   c. The enlargement, extension, or structural alteration may not encroach into required building perimeter landscaping areas, parking lot landscaping areas or any required buffer yards.

   d. The enlargement, extension, or structural alteration shall create no additional nonconforming features;

   e. If the subject building lies in a historic district, the enlargement, extension, or structural alteration shall comply with all applicable requirements of that district; and

   f. If the subject building, and/or its proposed enlargement, extension, or structural alteration, lies in a special flood hazard area, the enlargement, extension, or structural alteration shall comply with all applicable requirements of this ordinance.

3. **Damage or Destruction**

   a. When a nonconforming structure is damaged to the extent of more than 75 percent of the property's "total improvements full market value" as shown on the County tax records at the time of such damage, such a structure, if restored, shall thereafter conform to all applicable development standards contained in this ordinance.

   b. If a nonconforming structure is damaged to a lesser extent than designated above, it may be reconstructed or repaired having the same nonconforming feature(s) as before the damage, or having those same features being more conforming (but still nonconforming) than before the damage, provided that a building permit for the reconstruction or repair work is obtained within 1 year of the date of such damage, or at the discretion of the Administrator.

D. STANDARDS FOR NONCONFORMING ACCESSORY USES AND STRUCTURES

Must Terminate When Principal Use/Structure is Terminated: No nonconforming accessory use shall continue after the principal use or structure is terminated by abandonment, damage, or destruction unless such accessory use is made to conform to the standards for the zoning district in which it is located. No nonconforming accessory structure shall become or replace any terminated principal nonconforming structure.

9.3.6 NONCONFORMING MANUFACTURED HOMES AND MOBILE HOME PARKS

A. NONCONFORMING MANUFACTURED HOUSING ON INDIVIDUAL LOTS

1. **Replacement Home**

   a. A nonconforming manufactured home on an individual lot outside of a manufactured home park may only be replaced with a unit that does not create more nonconformity.

   b. Manufactured homes may only be replaced with equivalently sized units or larger.

   c. Replacement units shall meet all applicable standards of Chapter 8, Flood Damage Prevention.

2. **Expansions Prohibited:** A nonconforming manufactured home on an individual lot may not be enlarged or altered externally in any way except where such alteration is required by law or an order from the Building Inspector, Fire Marshal, or the Administrator to ensure the safety of the structure, or where such alteration increases the degree of conformance of the home.

3. **Routine Maintenance Permitted**: Routine maintenance of such manufactured housing is permitted so long as no expansion of the nonconformity occurs as a result of the maintenance.

B. NONCONFORMING MANUFACTURED HOME PARKS AND HOUSING WITHIN PARKS

Continuation Permitted: Manufactured home parks which are nonconforming, either as to use or development standards, may continue to operate provided that replacement of manufactured housing units are as follows:

- Only existing spaces as of the effective date of this ordinance may be used. No additional spaces may be created or occupied.
- Replacement units may not increase the degree of nonconformity of setbacks from streets, property lines, structures, or watercourses.
- Replacement units shall meet all applicable standards of Chapter 8, Flood Damage Prevention.

9.3.7 NONCONFORMING SIGNS

A. STANDARDS

1. **Determination of Nonconformity:** Existing signs which do not conform to the specific provisions of the ordinance may be eligible for the designation "legal nonconforming" provided that:

   a. Such signs are properly maintained and do not in any way endanger the public.

   b. The sign was installed in conformance with a valid permit or variance, or complied with all applicable laws on the date of adoption of Chapter 7 of this ordinance.

2. **Loss of Legal Nonconforming Status:** A legal nonconforming sign may lose this designation if:

   a. The sign is relocated or replaced.

   b. The structure or size of the sign is altered in any way. This does not refer to change of copy or normal maintenance.

   c. The sign is an independent freestanding structure that has been unused for a period of 2 years.

3. **Maintenance and Repair of Nonconforming Signs**: The legal nonconforming sign is subject to all requirements of this ordinance regarding safety, maintenance, and repair. However, if the sign suffers more than fifty (50) percent damage or deterioration, as based on appraisal, or requires maintenance and/or repair to the extent that a Building, Electrical, Zoning or other permit is required to legally perform such maintenance and/or repair, it must be brought into conformance with this ordinance or removed.

4. **Signs Associated with Nonconforming Uses:** New signs related to legally established nonconforming uses may be erected provided they comply with the sign requirements of the district in which the use is located.

9.4 VIOLATIONS AND PENALTIES

9.4.1 NOTICE OF VIOLATIONS

A. ADMINISTRATOR AUTHORITY

1. Unless specifically set forth otherwise in this ordinance, the Administrator is hereby authorized to enforce the provisions of this ordinance.

2. The Administrator shall have the power to conduct such investigation as he/she may reasonably deem necessary to carry out his/her duties as prescribed in this ordinance, and for this purpose to enter at reasonable times upon any property or premises, public or private, to perform any duty imposed upon them by this ordinance.

3. The Administrator shall also have the power to require written statements, or filing of reports under oath, with respect to pertinent questions relating to violations of this ordinance.

B. COMPLAINTS REGARDING VIOLATIONS

Whenever a violation of this ordinance occurs, or is alleged to have occurred, any person may file a complaint. Any complaint stating fully the cause and basis of the complaint shall be filed with the Administrator who shall properly record such complaint, investigate in a timely manner, and take appropriate action as provided by this ordinance.

C. NOTICE OF VIOLATION; OPPORTUNITY TO CURE

1. In any case where the Administrator finds that any provision of this ordinance is being violated, he/she shall deliver a written notice to the person responsible for such violation(s) and to the owner of record of the property on which the violation occurs. This notice shall:

   a. Indicate the nature of the violation(s),

   b. Order the action necessary to correct the violation(s), and

   c. State the opportunity for an administrative hearing and subsequent appeal and

   d. State what action the Administrator intends to take if the violation is not corrected.

2. Such notice of violation shall be served by personal delivery or certified or registered mail, return receipt requested. The notice shall be mailed to the property address indicated on the County's official tax notice address of record.

3. The notice of violation shall include an opportunity to cure or correct the violation within a period of time, not less than 5 days or more than 30 days, as determined by the Administrator, without penalty.

4. Additional written notices may be sent at the Administrator's discretion.

5. The violator may request a hearing with the Administrator within the term prescribed for correction of the violation, during which the violator may propose a schedule for correction of the violation(s).

D. NOTICE OF VIOLATION; OPPORTUNITY TO APPEAL

1. The Administrator's order to correct a violation may be appealed to the Board of Zoning Appeals, provided that the violator must have requested a hearing with the Administrator prior to filing an appeal.

2. A Level 1 and 2.

E. SUMMARY REMOVAL OF VIOLATIONS

1. The Administrator shall have the authority to summarily remove, abate, or remedy a sign or sign structure which the building inspector has determined to be dangerous or prejudicial to the public health or safety, or any signs or sign structures prohibited.

2. In cases where temporary uses were established without the proper permit(s), and in any cases where delay would pose a danger to the public health safety or welfare, the violation(s) can be ordered removed/ceased immediately. The Administrator may seek enforcement without prior written notice by invoking any of the penalties or remedies.

3. Upon proper notice being given to the violator, or if the violator cannot be ascertained, to the property owner, the reasonable expense to the County in remedying the situation may be assessed.

9.4.2 SPECIFIC TYPES OF VIOLATIONS

A. FLOOD DAMAGE PREVENTION

Violation of the provisions of this ordinance or failure to comply with any of its requirements, including violation of conditions and safeguards established in connection with grants of variance or special exceptions, shall constitute a misdemeanor. Any person who violates this ordinance or fails to comply with any of its requirements shall, upon conviction thereof, be fined not more than $500.00 or imprisoned for not more than 30 days, or both. Each day the violation continues shall be considered a separate offense. Nothing herein contained shall prevent Lancaster County from taking such other lawful action as is necessary to prevent or remedy any violation.

B. STORMWATER

1. A person shall be in violation of this Section when he or she:

   a. Commences or conducts an activity described in this Section without prior approval from the appropriate agencies;

   b. Deviates from an approved stormwater permit or drainage plan;

   c. Fails to maintain drainage facilities under that person's ownership or control; or

   d. Changes the drainage patterns along the property line or stormwater conveyance system and as a result water has flooded or is reasonably likely to flood land or a building other than that of the property owner.

2. Any activity undertaken in violation of this Section shall be halted immediately after written notice by the County is issued. The violator shall be required to restore any altered land to its undisturbed condition or restore it to such condition in which it would not shed stormwater in violation of the control requirements for stormwater runoff. In the event that restoration is not undertaken within 30 days, the County may perform restoration on the property. The

cost of the restoration shall become a lien upon the real estate where such restoration occurred and shall be collectable in the same manner as the municipal taxes.

C. NOTICE OF VIOLATION

If land has been altered in violation of this section or drainage facilities are not maintained as required by this Section, the record owner of the property shall be notified in writing and the notice shall demand that such owner cause the condition to be remedied. Notice shall be deemed achieved when sent by regular United States mail to the last known address reflected on County tax records, or such address as has been provided by the person to the County. Notice shall also be posted upon the property on which the violation exists. Notice may be served by hand delivery to the owner of record of the property in lieu of mailing.

D. RECORDED VIOLATION

The County may record a notice of violation on the title to the property at the Lancaster County recorder of deeds office.

E. APPEALS

Within ten days after the date of the notice, the owner or the designated agent of the owner may file an appeal to show that the violation alleged in the notice does not exist or has not occurred. The appeal shall be in writing and must be provided to the environmental engineering division of public works.

F. CONDITION MAY BE REMEDIED BY COUNTY

If no appeal has been made, the violation has not been remedied within 30 days, or remediation has not commenced within a timeline acceptable to the County, the County may elect to cause the condition to be remedied. The costs of remedying the condition as well as such administrative and other costs as are necessary shall be charged against the property as a lien upon the real estate where such restoration occurred and shall be collectable in the same manner as the municipal taxes.

G. PREPARATION OF LIEN

After causing the condition to be remedied, the County shall determine the cost involved in remedying the condition, including all administrative and other costs as are necessary to correct the violation, and shall determine the proportionate costs that each property should bear.

H. NO DUTY ON THE COUNTY

This section creates no affirmative duty on the County to inspect, and it imposes no liability of any kind whatsoever on the County for omissions in inspecting. The landowner shall hold the County harmless from any liability in the event the stormwater management system fails to operate properly due to the landowner's failure to abide by the terms of this Section.

9.4.3 STOP WORK ORDER

Whenever the administrator or designee finds a violation of this Section or of any permit or order issued pursuant thereto, within their respective jurisdiction, the administrator or designee may issue a stop work order on all development activity on the subject property or on the portion of the activity in direct violation of the Section. In every case, the administrator or designee shall issue an order that: a) Describes the violation; b) Specifies the time period for remediation; and c) Requires compliance with this Section prior to completion of the activity in violation.

9.4.4 FINE

Failure to comply with any of the requirements of this Section, including conditions and safeguards established in connection with grants of variance or special exceptions, shall constitute a violation. Any violation thereof shall be subject to a fine of not more than $1,000.00, or such additional

maximum amount as may become authorized by state law, for each violation. Each day the violation continues shall be considered a separate offense.

9.4.5 CIVIL PENALTY

Any person who violates any provision of this Section shall be subject to a civil penalty of not more than $1,000.00, or such additional maximum amount as may become authorized by state law, provided the owner or other person deemed to be in violation has been notified of a violation. Notice shall be deemed achieved when sent by regular United States mail to the last known address reflected on the County tax records, or such other address as has been provided by the person to the County.

9.4.6 OTHER LEGAL ACTION

The County may also take any other legal action necessary to prevent or remedy any violation, including appropriate equitable or injunctive relief and, if applicable, an assessment to the violator for the removal, correction, or termination of any adverse effects upon any property resulting from any unauthorized activity for which legal action under this section may have been brought.

A. EROSION CONTROL VIOLATIONS

1. **Notice of Violation:** Any person who violates any of the provisions, or rule or order adopted or issued pursuant to that section, or who initiates or continues a land-disturbing activity for which a plan is required except in accordance with the terms, conditions, and provisions of an approved plan, is subject to a civil penalty and shall be served a notice of violation.

2. **Civil Penalties**

   a. The maximum civil penalty amount that the County may assess per violation is $5,000. A civil penalty may be assessed from the date of the violation. Each day of a continuing violation shall constitute a separate violation.

   b. Any person who fails to submit an erosion control plan for approval in accordance with this ordinance shall be subject to a single, noncontinuing civil penalty of not more than $1,000.

   c. Anyone who violates a stop work order regarding grading and filling control shall be subject to a civil penalty of not more than $1,500.

   d. The Administrator shall determine the amount of the civil penalty for other erosion control violations based upon the following factors:

      i. The degree and extent of harm caused by the violation,

      ii. The cost of rectifying the damage,

      iii. The amount of money the violator saved by noncompliance,

      iv. Whether the violation was committed willfully, and

      v. The prior record of the violator in complying or failing to comply with this section.

   e. The Administrator shall provide notice of the civil penalty amount and basis for assessment to the person assessed. The notice of assessment shall be served by the Administrator, and shall direct the violator to either pay the assessment or contest the assessment, within 30 business days after receipt of the notice of assessment, by filing a petition for contested case with the Administrator.

   f. The decision of the Administrative Law Judge may be appealed to the Court of Common Pleas of the county where the violation occurred.

   g. If payment is not received within 30 days after it is due, the County may institute a civil

action to recover the amount of the assessment. The civil action may be brought in the Court of Common Pleas of the county where the violation occurred, or the violator's residence or principal place of business is located. Such civil actions must be filed within 3 years of the date the assessment was due. An assessment that is not contested is due when the violator is served with a notice of assessment. An assessment that is contested is due at the conclusion of the administrative and judicial review, if any, of the assessment.

h. Civil penalties collected pursuant to this section shall be credited to the Civil Penalty and Forfeiture Fund.

3. Criminal Penalties

Any person who knowingly or willfully violates any provision of this section, or rule or order adopted or issued pursuant to this section, or who knowingly or willfully initiates or continues a land-disturbing activity for which a plan is required except in accordance with the terms, conditions, and provisions of an approved plan, shall be guilty of a Class 2 misdemeanor.

4. Injunctive Relief

a. Whenever the governing body has reasonable cause to believe that any person is violating or threatening to violate any ordinance, rule, regulation or order adopted or issued by the County or any term, condition, or provision of an approved plan, it may, either before or after the institution of any other action or proceeding authorized by this section, institute a civil action in the name of the County, for injunctive relief to restrain the violation or threatened violation. The action shall be brought in the Court of Common Pleas of the county in which the violation is occurring or is threatened.

b. Upon determination by a court that an alleged violation is occurring or is threatened, the court shall enter any order or judgment that is necessary to abate the violation, to ensure that restoration is performed, or to prevent the threatened violation. The institution of an action for injunctive relief under this section shall not relieve any party to the proceedings from any civil or criminal penalty prescribed for violations of this section.

5. Restoration After Non-Compliance

The County may require a person who engaged in a land-disturbing activity and failed to retain sediment generated by the activity, to restore the waters and land affected by the failure so as to minimize the detrimental effects of the resulting pollution by sedimentation. This authority is in addition to any other civil or criminal penalty or injunctive relief authorized under this section.

9.4.7 FLOODPLAIN VIOLATIONS

NATIONAL FLOOD INSURANCE ACT

The administrator or designee shall inform the owner that any such violation is considered a willful act to increase flood damages and, therefore, may cause FEMA to initiate a Section 1316 of the National Flood Insurance Act of 1968 action.

EXCLUSIVITY

The remedies listed in this Section are not exclusive of any other remedies available under any applicable federal, state, or local law and is within the discretion of the authorized enforcement agency to seek cumulative remedies.

DISCLAIMER OF LIABILITY

It is recognized that although the degree of flood protection required by this Section is considered reasonable for regulatory purposes and is based on scientific and engineering considerations, on occasions greater floods can and will occur, and flood heights may be increased by manmade or natural causes. These provisions do not imply that land outside the floodplain areas or that uses permitted within such areas will be free from flooding or flood damages. These provisions shall not create liability on the part of the Lancaster County nor any officer or employee thereof, for any claims, damages or liabilities that result from reliance on this Section or any administrative decision lawfully made hereunder.

SEPARABILITY

The provisions of this Section shall be deemed separable and the invalidity of any portion of this Section shall not affect the validity of the remainder.

ABROGATION AND GREATER RESTRICTIONS

This Section is not intended to repeal, abrogate or impair any existing deed or plat restrictions. Where this Section and other ordinance deed or plat restrictions conflict or overlap, whichever imposes the more stringent restrictions shall prevail. This Section is intended to repeal the original ordinance or resolution which was adopted to meet the National Flood Insurance Program regulations, but is not intended to repeal the resolution which the Lancaster County passed in order to establish initial eligibility for the program.

A. **Violations to be Corrected:** When the Floodplain Administrator finds violations of this ordinance or any other applicable state and local laws it shall be his or her duty to notify the owner or occupant of the building of the violation. The owner or occupant shall immediately remedy each of the violations of law pertaining to their property.

B. **Actions in the Event of Failure to Take Corrective Action:** If the owner of a building or property shall fail to take prompt corrective action, the Floodplain Administrator shall give the owner written notice, by certified or registered mail to the owner's last known address or by personal service, stating:

1. That the building or property is in violation of the flood damage prevention provisions of this ordinance;
2. That a hearing will be held before the Floodplain Administrator at a designated place and time, not later than 10 days after the date of the notice, at which time the owner shall be entitled to be heard, in person or by counsel, and to present arguments and evidence pertaining to the matter; and
3. That following the hearing, the Floodplain Administrator may issue such order to alter, vacate, or demolish the building; or to remove fill as appears appropriate.

C. **Order to Take Corrective Action:** If, upon a hearing held pursuant to the notice prescribed above, the Floodplain Administrator shall find that the building or development is in violation of the flood damage prevention ordinance, he or she shall make an order in writing to the owner, requiring the owner to remedy the violation within a specified time, said period to be not less than 60 days nor more than one year. Where the Floodplain Administrator finds that there is imminent danger to life or other property, he may order that corrective action be taken in such lesser period as may be feasible.

D. **Appeal:** Any owner who has received an order to take corrective action may appeal the order to the Board of Zoning Appeals by giving notice of appeal in writing to the Floodplain Administrator and the clerk within 10 days following issuance of the final order. In the absence of an appeal, the order of the Floodplain Administrator shall be final. The Board of Zoning Appeals shall hear an appeal within a reasonable time and may affirm, modify and affirm, or

revoke the order.

E. **Failure to Comply with Order:** If the owner of a building or property fails to comply with an order to take corrective action from which no appeal has been taken, or fails to comply with an order of the Board of Zoning Appeals following an appeal, he shall be guilty of a misdemeanor and shall be punished in the discretion of the court.

9.4.8 PENALTIES FOR VIOLATIONS AND ENFORCEMENT MECHANISMS

Unless otherwise specified for specific types of violations, the following procedures, penalties and enforcement mechanisms for violations of this ordinance shall apply.

A. LIABILITIES FOR VIOLATIONS

Any person who erects, constructs, reconstructs, alters, repairs, converts, or maintains any building, structure, sign or sign structure or develops, grades or otherwise alters property in violation of this ordinance, and any person who uses any building, structure, sign or sign structure or land in violation of this ordinance shall be subject to civil and/or criminal penalties.

B. CIVIL PENALTIES

1. **Civil Citations Following a Notice of Violation**

   a. Following the delivery of a notice of violation if the alleged violator or property owner does not correct the violation within the time period determined by the Administrator, a citation subject to the following schedule of civil penalties shall be issued.

Notice/Citation	Penalty
Notice of Violation	No penalty if the violation is corrected within the time period determined by the Administrator as identified in the written notice.
Citation (for each uncorrected offense)	$500.00; per day (as defined as the 24-hour period after which the notice has been delivered) that the violation continues to exist.

   b. If the Administrator notifies a party of a violation, and that violation is remedied but subsequently reestablished (committed by the same violator at the same location and being of the same nature as the original violation) within a period of 12 months, the violator shall incur the fines prescribed above without the need of a notice of violation.

2. **Violation Assumed to be Continued until a Request for Compliance Inspection Is Made:** It is the responsibility of the party in violation to submit a request for an inspection for compliance to the Administrator upon correction of the violation. The violation will assume to be continued, and penalties assessed according to the schedule above, until an inspection is requested and the property is found to be in compliance.

3. **Recovery of Civil Penalties:** The County may recover penalties in a civil action in the nature of a debt if the offender does not pay the penalty within 3 regular business days (excluding weekends and holidays) after being cited for a violation.

4. **Limitation on Appeal of Civil Penalties:** These civil penalties may not be appealed to the Board of Zoning Appeals if the violator received a notice of violation and did not attend the hearing with the Administrator.

C. CRIMINAL PENALTIES

Any person, firm, or corporation convicted of violating the provisions of this ordinance shall, upon conviction, be guilty of a misdemeanor and shall be fined an amount consistent with the General Statutes.

D. INJUNCTIVE OR OTHER RELIEF

1. In addition to, or in lieu of, the other remedies set forth in this chapter, the Administrator, in the event of a violation of this ordinance, may request that the County Attorney institute, in a court of competent jurisdiction, an injunctive action, mandamus action, or other appropriate proceeding to prevent the completion or occupation of such building or structure, or use of land.
2. Upon determining that an alleged violation is occurring or is threatened, a court hearing an appeal for relief shall enter such orders and/or judgments as are necessary to abate or prevent the violation.
3. The institution of an action for injunctive or other relief under this sub-section shall not relieve any party to such proceeding from any civil or criminal penalty prescribed by this chapter for violations of this ordinance.

E. EQUITABLE REMEDY

In addition to the civil penalties set out above, any provision of this ordinance may be enforced by an appropriate equitable remedy issuing from a court of competent jurisdiction. The Administrator may apply to a judicial court of law for any appropriate equitable remedy to enforce the provisions of this ordinance. It is not a defense to the Administrator's application for equitable relief that there are other remedies provided under general law or this ordinance.

F. ORDER OF ABATEMENT

In addition to an injunction, the Administrator may apply for, and the court may enter into, an order of abatement as part of the judgment in the case. An order of abatement may direct any or all of the following actions:

1. Buildings, foundations, or other structures on the property be closed, demolished, or removed;
2. Fixtures, furniture, or other moveable personal property be moved or removed entirely;
3. Improvements alterations, modifications or repairs be made; or
4. Any other action be taken that is necessary to bring the property into compliance with this ordinance.

G. EXECUTION OF COURT DECISIONS

If the defendant fails or refuses to comply with an injunction or with an order of abatement within the time allowed by the court, the defendant may be cited for contempt. The Administrator may execute the order of abatement and will have a lien on the property in the nature of a mechanic's and materialman's lien for the cost of executing the order, any attorney's fees and court costs incurred by the County, any unpaid fines due to the County, and any other reasonable administrative costs as necessary. The defendant may secure cancellation of an order of abatement by paying all costs of the proceedings and by posting a bond for compliance with the order. The bond must be given with sureties approved by the Clerk of the Court of Common Pleas in an amount approved by the judge before whom the matter was heard and shall be conditioned for the defendant's full compliance with the terms of the order of abatement within the time fixed by the judge. Cancellation of an order of abatement does not suspend or cancel an injunction issued in conjunction with the order.

H. REVOCATION OF PERMITS

In the event of a violation of any provision of this UDO, the Administrator may stop any development of, use of, or activity on property by revoking the applicable permit.

1. **Grounds for Revocation:** Permits may be revoked when:

a. False statements or misrepresentations were made in securing the permit;

b. Work is being or has been done in substantial departure from the approved application or plan;

c. There has been a failure to comply with the requirements of this ordinance or any additional requirements lawfully imposed by the permit issuing authority, including but not limited to specific conditions of approval; or

d. The permit was been mistakenly issued in violation of this ordinance.

2. **Written Notice and Hearing Required:** Before a development-related permit (e.g. Building Certificate of Occupancy) may be revoked, the Administrator shall give the permit recipient notice of intent to revoke the permit, inform the recipient of the reasons for the revocation and hold a hearing at a specified time and place as set forth in the notice of intent to revoke, at which time the recipient, if present, shall be given opportunity to be heard. If, after the hearing, the permit is revoked by the office of the Administrator for reasonable cause, the Administrator shall provide to the recipient a written statement of the decision to revoke the permit and the reasons therefore.

3. **Appeals of Revocation:** The recipient may appeal the decision of the Administrator to the Board of Zoning Appeals.

4. **Continuation of Use Not Allowed Following Revocation:** No person may continue to make use of land or buildings in the manner authorized by any development-related permit on or after the date such permit has been revoked in accordance with this section. Such use shall constitute a violation and subject the responsible party to the penalties.

5. **Resubmittal:** Any resubmittal of a request for permit upon the same property shall meet all the provisions of the ordinance as adopted at the time of the submittal, and shall go through the full submittal process for the appropriate permit type.

10 DEFINITIONS

10.1 INTENT

For the purpose of interpreting this ordinance, certain words, concepts, and ideas are defined herein. Except as defined herein, all other words used in this ordinance shall have their everyday meaning as determined by their dictionary definition.

Section 10.3 includes all definitions listed on the Use Table in Section 2.5.3. Section 10.4 are all definitions more general in nature and includes definitions specific to the mixed-use districts in Chapter 3; the aviation regulations in Chapter 4; and the floodplain and stormwater regulations in Chapter 8.

10.2 RULES OF CONSTRUCTION

The words and phrases in this chapter shall have their customary meanings or shall be as defined in a standard dictionary, except for the specific words and phrases defined in this chapter unless otherwise stated, the following shall apply:

- Tense. Words used in the present tense include the future tense and the future tense includes the present tense.
- Number. The singular number includes the plural number and the plural number includes the singular number.
- Person. The word "person" includes a firm, association, partnership, trust, company, corporation, or any other organization usually defined in legal usage as a person.
- Shall and May. The words "shall," "must," and "will" are mandatory in nature. The word "may" is permissive in nature.
- Used or Occupied. The words "used" and "occupied" include the words "intended, designed, or arranged to be used or occupied."
- Lot. The word "lot" includes the words "plot" and/or "parcel."
- Structure. The word "structure" includes the word “building.”
- On the Premises Of. The phrase "on the premises of," as applied to accessory uses or structures, shall be interpreted to mean "on the same lot."
- LBCS – American Planning Association Land-based Classification Standards
- NAICS – North American Industrial Classification System
- Land use; purpose. Defined land uses shall include both for-profit and non-profit ventures unless otherwise stated.

10.3 DEFINITIONS, USE TYPE

ACCESSORY USE A use that is clearly incidental to and customarily found in connection with a principal building or use, is subordinate to and serves a principal building or use and is subordinate in area, extent and purpose to the principal building or principal use served.

AGRICULTURAL & CROP PRODUCTION/ HARVESTING A property used primarily for the production and activities relating or incidental to the production and harvesting of crops, fruits, nuts vegetables, ornamental and flowering plants or sod.

AGRICULTURAL SUPPORT SERVICES/ NURSERIES Nursery, orchard, forestry, or farm supply and support services including, but not limited to: equipment dealers, support uses for agricultural, harvesting, and/or animal production, seasonal packing sheds, etc.

AGRITOURISM Farm-related enterprises that operate for the enjoyment and education of the public and that combine tourism and agriculture such as agriculture cultural centers; hay rides, corn mazes, and petting zoos (farm animals only).

AIRSTRIP/AIRPORT A surface used for take-off and landing of aircraft and the buildings, passenger/freight terminals, airplane hangars, and other accessory uses directly associated with that function.

ALCOHOLIC BEVERAGE SALES STORE The retail sales of beer, wine, and/or other alcoholic beverages for off-premise consumption as a primary use.

AMUSEMENTS, INDOOR Establishments that provide commercial recreation activities completely within an enclosed structure such as video arcades, skating rinks, roller rinks, and bowling alleys.

AMUSEMENTS, OUTDOOR Establishments that provide commercial recreation activities primarily outdoors such as miniature golf establishments; go-cart facilities; theme parks, carnivals, fairgrounds, and midways; paintball parks; and water rides.

ANIMAL PRODUCTION/GENERAL FARMS The raising, breeding, feeding, and/or keeping of animals for the principal purpose of commercially producing products for human use or consumption, including, but not limited to: cattle, pigs, sheep, goats, fish (aquaculture), rabbits, and poultry. This does not include Animal Production Facilities. The animals are generally raised in an open range pasture environment. Establishments primarily engaged in the farm raising and production of aquatic animals or plants in controlled or selected aquatic environments are included in this subsector.

ANIMAL PRODUCTION FACILITY, NON-SWINE The raising, breeding, feeding, and/or keeping of turkeys and/or chickens in confinement at high stocking density for the purpose of commercially producing meat, milk, or eggs for human consumption. The animals are generally raised in total confinement or captivity. These type Animal Production establishments tend to have a blighting and/or deteriorating effect upon surrounding properties.

ANIMAL PRODUCTION FACILITY, SWINE The raising, breeding, feeding, and/or keeping of pigs in confinement at high stocking density for the purpose of commercially producing meat, milk, or eggs for human consumption. The animals are generally raised in total confinement or captivity. These type Animal Production establishments tend to have a blighting and/or deteriorating effect upon surrounding properties.

APICULTURE (BEE KEEPING) The keeping of bees on a large scale with commercial services ranging from selling equipment and supplies, pollination services, honey bee removal, honey bee breeding, queen breeding, etc.

ARTIST STUDIO/LIGHT MAUFACTURING WORKSHOP The assembly, fabrication, production, or processing of goods and materials using processes that ordinarily do not create noise, smoke, fumes, odors, glare, or health or safety hazards outside of the building and are visually undifferentiated from an office building or a residentially-scaled garage. These typically involve the work of artisans or craftsman.

ATM Self-service machines used by banking customers for financial transactions, including deposits, withdrawals, and fund transfers, without face-to-face contact with financial institution personnel. These machines may be located at or within banks, or in other locations.

BACKYARD PENS/COOPS The long-term keeping of poultry, rabbits, and other similar small creatures in backyards as accessory uses to existing residential structures. Large animals may be allowed depending on size of lot.

BANKS, CREDIT UNIONS, FINANCIAL SERVICES Establishments that engage in financial transactions that create, liquidate, or change ownership of financial instruments. Banks, credit unions, and savings institutions may perform central banking functions, accept deposits, and lend funds. In addition to banks and credit unions, financial services institutions may include: credit agencies, trust companies, holding companies, savings and loan institutions, securities/commodity contract brokers and dealers, security and commodity exchanges, vehicle finance (equity) leasing agencies, and investment companies.

BAR/TAVERN/BREW PUB A business where alcoholic beverages are sold for on-site consumption, which are not part of a larger restaurant. Includes bars, taverns, pubs, and similar establishments where any food service is subordinate to the sale of alcoholic beverages. May also include beer brewing as part of a brewpub.

BED AND BREAKFAST HOMES (UP TO 8 ROOMS) A private home containing not more than 8 guest rooms that offers bed and breakfast accommodations to guests.

BED AND BREAKFAST INN (UP TO 12 ROOMS) A private home containing between 9 and 12 guest rooms that offers bed and breakfast accommodations to guests.

BILLIARD/POOL HALL Any place where one or more billiard or pool tables are operated or maintained, except for private family use, whether such place is a social club or a business enterprise operated for profit.

BOARDING OR ROOMING HOUSE A building arranged or used for lodging for compensation, with or without meals, and not occupied as a single-family unit.

BREWERY A licensed facility, as allowed by SC Code Title 61, Chapter 4 as amended, that offers samples of beer to consumers on its licensed premises. The entire brewing process must take place on the licensed premises. Samplings and sales by consumers must be held in conjunction with a tour by the consumer of the facility.

BUSINESS SUPPORT SERVICES These establishments provide any of the following: document preparation, telephone answering, telemarketing, mailing (except direct mail advertising), court reporting, and steno typing. They may operate copy centers, which provide photocopying, duplicating, blueprinting, or other copying services besides printing. They may provide a range of support activities, including mailing services, document copying, facsimiles, word processing, on-site computer rental, tax preparation, legal services and office product sales.

CAMPGROUND A lot, tract, or parcel of land upon which campsites for trailers, tents, or RV's are permitted for the purpose of temporary habitation for the travelling or vacationing public.

CEMETERY A parcel of land used for internment of the dead in the ground or in mausoleums.

CHILD/ADULT DAY CARE HOME (5 OR LESS PERSONS) Supervision or care provided on a regular basis as an accessory use within a principal residential dwelling unit, by a resident of the dwelling, for five or less children/adults).

CHILD/ADULT DAY CARE CENTER (6 OR MORE PERSONS) An individual, agency, or organization providing supervision or care on a regular basis for children or adults who are not related by blood or marriage to, and who are not the legal wards or foster children of, the supervising adults; and who are not residents in the center; designed and approved to accommodate more than six children or adults at a time based on State regulations; not an accessory to residential use.

COLLEGE/UNIVERSITY Junior colleges, colleges, universities, and professional schools with physical structures (excluding online and remote programs). These establishments furnish academic or technical courses and grant degrees, certificates, or diplomas at the associate, baccalaureate, or graduate levels in a campus setting.

COMMERICAL STABLES Stabling, training, feeding of horses, mules, donkeys, or ponies, or the provision of riding facilities for use other than by the resident of the property, including riding academies. Also includes any structure or place where such animals are kept for riding, driving, or stabling for compensation or incidental to the operation of any club, association, ranch, or similar purpose.

COMMUNITY SUPPORT FACILITY A non-profit or government facility providing personal assistance to individuals in need; such assistance to individuals may include temporary shelter, food services provisions, counseling, instruction, medical services, and other incidental services. This definition is not intended to be inclusive of Transitional Shelters which are regulated as separate temporary uses.

CONFERENCE/CONVENTION CENTER A

commercial facility for public assembly including, but not limited to auditoriums, conference facilities, convention centers, exhibition halls, and the like.

CORRECTIONAL INSTITUTION Government establishments generally designed for the confinement, correction, and rehabilitation of offenders sentenced by a court.

CREMATORIA Establishments for the preparation of the dead through cremation in a furnace. This definition includes crematoria for the internment of animal remains.

CULTURAL OR COMMUNITY FACILITY Facilities designed to promote cultural advancement and serve the community such as live theater, dance, or music establishments; art galleries, studios and museums, or similar facility; and libraries.

DAY TREATMENT CENTER A state-licensed facility providing behavioral health treatment programs, outpatient care, substance abuse treatment and treatment of mental or nervous disorders. Consumers, or patients, may be residents of their own home, a substitute home, or a group care setting. The day treatment is provided in a setting separate from the consumer's residence.

DISTILLERY A facility used for the commercial purpose of the production of liquors and similar beverages. The facility may incorporate all aspects of production including aging, storage, bottling, wholesale sales, warehousing, and administrative office functions. Retail sales, tasting facilities, and event facilities may be permitted as part of the facility operations.

DORMITORY A building used as group living quarters for a student body or religious order as an accessory use for a college, university, boarding school, convent, monastery or other similar public, semi-public use.

DRIVE-THRU/DRIVE-IN FACILITY A primary or accessory facility where goods or services may be obtained by motorists without leaving their vehicles. These facilities include drive-through bank teller windows, dry cleaners, fast-food restaurants, drive-through coffee, photo stores, pharmacies, etc. Does not include: Automated Teller Machines (ATMs), gas stations or other vehicle services, which are separately defined.

DRY CLEANING & LAUNDRY SERVICES Coin-operated laundries, dry cleaning pick-up stores without dry cleaning equipment, or dry cleaning stores that do not provide cleaning services to other collection stations or stores.

DWELLING-ACCESSORY A dwelling unit either detached or attached, such as a garage apartment or cottage, designed for occupancy by one or two persons, located on a lot with an existing single family dwelling.

DWELLING – FOUR FAMILY (QUADRAPLEX) Four dwelling units, including modular homes, attached side by side or one on top of another and sharing common walls or common floors and ceilings.

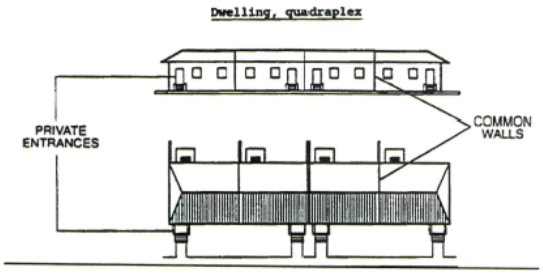

(Ord. No. 2019-1620, 12.9.19; Ord. No. 2020-1645, 2.4.20)

DWELLING-MULTIFAMILY A building or portion thereof containing three or more dwelling units on a single lot where each unit has a separate entrance from the outside or through a common vestibule. A multifamily structure where dwelling units are available for lease or rent for less than one month shall be considered lodging.

DWELLING-SINGLE FAMILY A free standing building designed for and/or occupied by one household. These residences may be individually owned or owned by rental or management companies. Also includes factory-built, modular housing units that comply with International Residential Code.

DWELLING – THREE FAMILY (TRIPLEX) Three dwelling units, including modular homes, attached side by side or one on top of another sharing common walls or common floors and ceilings.

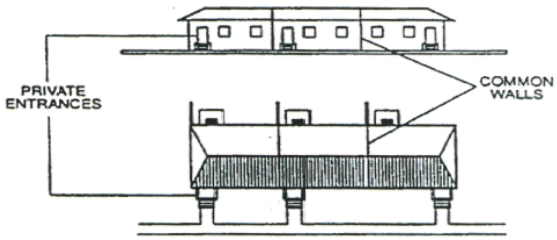

(Ord. No. 2019-1620, 12.9.19; Ord. No. 2020-1645, 2.4.20)

DWELLING-TOWNHOME A building with two or more residential units, located side by side, with

common walls between the units and where each unit has a separate entrance from the outside and occupies a separate lot. Townhomes typically have one primary yard (rear) and a small front setback to provide some landscaping.

DWELLING-TWO FAMILY A two-unit building located on a single lot that is divided horizontally or vertically, and each unit has a separate entrance from the outside or through a common vestibule.

ECOTOURISM Organized, educational and mainly outdoor recreation with or without lodging that invites participants to learn about and promote ecological preservation, conservation, and sustainability. This use shall include at least two of the following characteristics:

1) Located near or within a wilderness setting, park, or protected area;
2) Interpretive educational program with or without guides;
3) Outdoor activities; or
4) Cultural experiences.

EVENT VENUE/BANQUET HALL An establishment which is rented by individuals or groups to accommodate private functions including, but not limited to, banquets, weddings, anniversaries and other celebrations. The establishment may include:

1) Kitchen facilities for the preparation or catering of food,
2) The sale of alcoholic beverages for on-premises consumption only during scheduled events that are not open to the general public, and
3) Outdoor gardens or reception facilities.

Civic uses are not included in this definitions.

FARMERS' MARKETS/ROADSIDE STANDS A Seasonal Sales establishment, operated primarily in the open air, for the distribution of agricultural products including, but not limited to: vegetables, fruits, meats, eggs, dairy products, grains, and prepared foods.

FOOD TRUCK A licensed, motorized vehicle mobile food unit which is temporarily stored on privately-owned lot where food items are sold to the general public.

FORESTRY Perpetual management, harvesting, replanting, and enhancement of forest resources for ultimate sale or use of wood products, subject to S.C. Forestry Commission BMPs.

FRATERNITY/SORORITY HOUSE A structure used to provide housing for fraternal or sisterhood organization members while such persons are attending college.

FUNERAL HOMES Establishments for preparing the dead for burial or internment and conducting funerals (i.e. providing facilities for wakes, arranging transportation for the dead, and selling caskets and related merchandise).

GARDEN (COMMUNITY AND PRIVATE) An exterior area for the small-scale production of vegetables and flowering plants for personal or small commercial use. This definition includes community and private gardens. This definition does not include crop production and nurseries.

GENERAL COMMERCIAL A place of business providing the sale and display of goods or sale of services directly to the consumer, with goods available for immediate purchase and removal from the premises by the purchaser.

HALFWAY HOMES A place where persons are aided in readjusting to society following a period of imprisonment, hospitalization, or institutionalized treatment related to a criminal offense. This term excludes residential/family care homes and residential care facilities.

HEAVY EQUIPMENT/MANUFACTURED HOME RENTAL/SALES/REPAIR Establishments which may have showrooms, open lots or garages for selling, renting, leasing, repairing, servicing, alteration, restoration, towing, painting, and/or finishing of heavy equipment such as buses, trucks, manufactured homes, construction equipment, commercial and industrial equipment and/or boats or other marine craft.

HOME OCCUPATION An occupation or profession conducted within a dwelling unit by a resident that is incidental to the primary use of the dwelling as a residence. Home Occupations are small and quiet businesses generally invisible from the frontage requiring little parking, little or no signage, and having only one or two employees and provide services such as professional services, music instruction, and hair styling. For the purposes of this ordinance, telecommuting shall not constitute the establishment of a home occupation.

HOSPITAL A health care facility and related facilities the purpose of which is to provide for care, treatment, testing for physical, emotional, or mental injury, illness, or disability, and overnight boarding of patients, either on a for- profit or not-for-profit basis; but not including group homes. The facility must be licensed by the South Carolina Department of Health and Environmental Control (SCDHEC).

HOTEL/MOTEL Establishments providing lodging and short-term accommodations for travelers. They may offer a wide range of services including overnight sleeping space, food services, convention hosting services, and/or laundry services. Entertainment and recreation activities may also be included. Extended-stay hotels are included in this category. This definition includes "inns."

INDUSTRY, RESTRICTED A facility that involves the use, storage, production or processing of any hazardous materials or substances in quantities subject to the reporting requirements of The Emergency Planning and Community Right-to-Know Act (EPCRA) also known as SARA Title III of 1980 (Sections 311-312, 42 U.S.C. §§ 11021-11022) and/or any facility which uses, stores, produces or processes dangerous goods and/or hazardous substances that are covered by separate regulations, standards or codes which are classified on the basis of immediate physical or chemical hazards, such as fire, explosion, corrosion and toxicity, and are in sufficient quantities such that accidental release or explosion may affect life, health, property or the environment beyond the immediate perimeter of the facility. These include: flammable gases, flammable liquids, flammable solids (self-reactive and related substances; and desensitized explosives), substances liable to spontaneous combustion, substances that when in contact with water emit flammable gases, oxidizing substances, organic peroxides, toxic substances, radioactive and corrosive substances.

INDUSTRY, HEAVY Typically the largest facilities in a community, these structures house complex operations and allow for intense manufacturing and industrial uses that have high impacts to neighboring properties with extensive outdoor activities. (Ord. No. 2018-1529, 8.27.18)

INDUSTRY, LIGHT These facilities are typically designed for a range of primarily indoor industrial uses such as fabrication, manufacturing, assembly, processing, and bulk storage which have low impacts on surrounding properties. (Ord. No. 2018-1529, 8.27.18)

JUNKYARDS Any land or structure used for storing, dismantling, reconditioning, collecting, purchasing, or selling of scrap metal or other discarded goods and materials, including the collection, dismantlement, and salvage of two or more inoperative vehicles, boats, or other types of machinery or equipment.

KENNELS, INDOOR Establishments for the boarding and grooming of pets.

KENNELS, OUTDOOR A use or structure intended and used for the breeding or accommodation of small domestic animals for sale or for the training, or overnight boarding, of animals for persons other than the owner of the lot, but not including a veterinary clinic in which the overnight boarding of animals is necessary for or accessory to the testing and medical treatment of the physical disorders of animals.

LANDFILL - CLASS TWO - CONSTRUCTION AND DEMOLITION DEBRIS -Discarded solid wastes resulting from construction, remodeling, repair, and demolition of structures, road building, and land clearing. The wastes include, but are not limited to, bricks, concrete, and other masonry materials, soil, rock, lumber, road spoils, paving material, and tree and brush stumps, but does not include solid waste from agricultural or silvicultural operations.

LANDFILL - CLASS THREE A solid waste disposal facility, as defined in South Carolina Code of Laws, Title 44, as amended, for hazardous or nonhazardous solid waste, scrap metal, vehicles and other scrap materials. These establishments also include recycling and resource recovery facilities that operate in conjunction with landfills. This definition is not intended to be inclusive of Outdoor Storage Yards, or landfills classified as Land Clearing Debris and Yard Waste facilities operated in association with an active building permit on the same or adjacent parcel. This definition is not inclusive of the outdoor storage of lumber, pipe, brick, mulch, soil, gravel, sand and similar nonhazardous materials.

LIVE-WORK UNITS An attached residential building type with a small commercial enterprise on the ground floor and a residential unit above or behind with a common tenant in both spaces (no dual occupancy is permitted). Live-work units exist as variations of either the Detached House building type or the Townhome building type and shall be subject to their applicable requirements.

MANUFACTURED HOME PARK The location of two or more manufactured or mobile homes on a parcel of land shall constitute a manufactured home park.

MANUFACTURED (MOBILE) HOUSING A structure, transportable in one or more sections, which is built on a permanent chassis and is designed for use with or without a permanent foundation when attached to the required utilities.

This definition is not inclusive of Recreational Vehicles.

MANUFACTURED HOUSING-CLASS A A manufactured home constructed after July 1, 1998 that meets or exceeds the construction standards promulgated by the US Department of Housing and Urban Development authorized under the National Manufactured Housing Construction and Safety Standards Act of 1974 that were in effect at the time of construction, and has a HUD label attached.

MANUFACTURED HOUSING-CLASS B A double-wide manufactured home constructed to meet or exceed the construction standards promulgated by the US Department of Housing and Urban Development authorized under the National Manufactured Housing Construction and Safety Standards Act of 1974 that were in effect at the time of construction and has a HUD label attached, but does not meet the criteria of a Class A Manufactured Home.

MANUFACTURED HOME-CLASS C A single-wide manufactured home constructed to meet or exceed the construction standards promulgated by the US Department of Housing and Urban Development authorized under the National Manufactured Housing Construction and Safety Standards Act of 1974 that were in effect at the time of construction and has a HUD label attached, but does not meet the criteria of a Class A Manufactured Home.

MEDICAL CLINIC Facilities that provide outpatient ambulatory or outpatient health care such as emergency medical clinics; ambulatory surgical centers dialysis centers outpatient family planning services; community health centers and clinics; and blood and organ banks.

MINING MAJOR RESOURCE EXTRACTION (MINING AT DEPTH) The mining or extraction of any minerals, ore, fossil fuels, or other materials from beneath the surface of the earth.

MINING MINOR RESOURCE EXTRACTION (SURFACE) Extractive uses such as surface mining for sand, gravel, clay and topsoil and any other such use. Quarrying is not permitted.

NAICS Code	NAICS Industry Sector
211	Oil and Gas Extraction
212	Mining (except Oil & Gas)
213	Mining Support Activities

NIGHT CLUB A facility serving alcoholic beverages for on-site consumption, and providing entertainment, examples of which include live music and/or dancing, comedy, etc. Does not include sexually oriented/adult businesses.

NURSERIES & GARDEN CENTERS Industries in the Nursery and Garden Center subsector grow and sell plants mainly to be transplanted to another lot. The subsector comprises establishments, such as orchards, greenhouses, and nurseries, primarily engaged in retailing plants, vines, or trees and their seeds.

OPERATIONS, MAINTENANCE, AND FLEET SERVICE FACILITY A facility owned and/or operated by the government for the purpose of storage, maintenance, and/or fueling of fleet vehicles; storage of equipment and supplies in warehouses or outdoor storage yards; and/or the dispatching and training of field employees. (Ord. No. 2019-1607, 10.14.19)

OUTSIDE SALES The retail sale of goods and products outside of a permanent primary structure that are clearly secondary to the function contained in that structure. They are typically located within permanent open-air structures, uncovered outdoor areas and/or on public or private sidewalks. Sale items include, but are not limited to, landscape materials, lawn and garden supplies, and produce.

OUTSIDE SALES, SIDEWALK SALES The retail sale of goods and products outside of a permanent primary structure that are clearly secondary to the function contained in that structure and are located exclusively on public sidewalks. Sale items include, but are not limited to, produce,

OUTSIDE STORAGE The storage of any material for a period greater than 48 hours, including items for sale, lease, processing and repair (excluding vehicles for sale) outside the principal or accessory buildings on a property. Storage of construction materials on an active job site may not be defined as outside storage.

PARKING LOT/STRUCTURE–PRINCIPAL USE A stand-alone parking lot or structure (deck/garage) that is available for public or private use, but that is not accessory to another use.

PAWNSHOPS Premises operated by a pawnbroker who is engaged in the business of lending money on the security of pledged goods and who may also purchase merchandise for resale from dealers and traders. (Subject to South Carolina Code of Laws, Title 40, Chapter 39)

PERSONAL SERVICES Cosmetic services such as hair and nail salons, barber shops, clothing alterations, shoe repair, weight loss centers and

non-permanent makeup services.

PERSONAL SERVICES, RESTRICTED A personal service establishment that may tend to have a blighting and/or deteriorating effect upon surrounding areas and that may need to be dispersed from other similar uses to minimize its adverse impacts, including check-cashing services and tattooing, piercing, huka or hookah facilities, and similar services. These uses may also include accessory retail sales of products related to the services provided.

PLACES OF ASSEMBLY Structures and land designed for 50 or more people to congregate for civic, social, and religious functions. This includes, but is not limited to, worship centers, such as churches, temples, synagogues, and mosques, and civic meeting facilities, such as alumni associations, booster clubs, scouting organizations, ethnic associations, social clubs, fraternal lodge and veterans' membership organizations.

POST OFFICE Establishments conducting operations of the United States Postal Service including permanent, contract, and lease stations.

PRIVATE MATERIALS RECOVERY & WASTE TRANSFER FACILITIES This commercial industry comprises establishments primarily engaged in operating facilities for separating and sorting recyclable materials from nonhazardous waste streams (i.e., garbage); and/or operating facilities where commingled recyclable materials, such as paper, plastics, used beverage cans, and metals, are sorted into distinct categories.

PRIVATE RECREATION FACILITIES Indoor or outdoor uses or structures for active or passive recreation that are owned by private for-profit entities. Such uses include gymnasiums, natatoriums, fitness center, athletic equipment, indoor running tracks, climbing facilities, court facilities, parks, pools, ball fields, batting cages, skateboard parks, playgrounds, greenway trails, driving ranges, tennis courts, riding stables, golf courses and their customary accessory uses including, but not limited to, maintenance sheds, clubhouses (with or without food service), restrooms, and picnic shelters.

PRIVATE RECYCLING COLLECTION STATIONS A center for the acceptance by donation, redemption, or purchase, of recyclable materials from the public. This definition is not intended to be inclusive of Materials Recovery & Waste Transfer Facilities, which are engaged in the active sorting and processing of recyclables or other waste materials.

PROFESSIONAL SERVICES Services provided that make available the knowledge and skills of their employees to sell expertise and perform professional, scientific, and technical services to others such as legal services; accounting, tax, bookkeeping, and payroll services; architectural, engineering, and related services; graphic, industrial, and interior design services; consulting services; research and development services; advertising, media, and photography services; real estate services; investment banking, securities, brokerages; and insurance-related services; and, medical services such as physician's and dentist's offices.

PUBLIC RECREATION FACILITIES Indoor or outdoor uses or structures for active or passive recreation that are owned by public or semi- public entities including municipal governments, homeowner's associations, athletic associations and youth associations. Such uses include, gymnasiums, natatoriums, fitness center, athletic equipment, indoor running tracks, climbing facilities, court facilities, parks, pools, ball fields, batting cages, skateboard parks, playgrounds, greenway trails, driving ranges, tennis courts, riding stables, golf courses and their customary accessory uses including, but not limited to, maintenance sheds, clubhouses (with or without food service), restrooms, and picnic shelters.

PUBLIC SAFETY STATION Facilities for federal, state and local law enforcement and fire protection agencies, and their accessory uses including office space, temporary holding cells, equipment and evidence storage facilities, and vehicle garages. This definition is not intended to be inclusive of vehicle impoundment lots or state prison facilities.

PUBLIC RECYCLING & WASTE COLLECTION FACILITY Waste Collection and Recycling - A site, location, tract of land, or building that may be used for the purpose of collecting all types of residential waste and recyclables that are generated "off-site" in the local community to be transported by public or private companies to a waste recycling, transfer or disposal/recovery facility, permitted by South Carolina Department of Health and Environmental Control (SCDHEC) as required. This use includes county collection (convenience) centers.

RACETRACK An outdoor course prepared for horse, dog, automobile or other vehicle racing.

RESEARCH AND DEVELOPMENT FACILITIES

This includes medical and testing laboratories but shall not include uses that require frequent deliveries by truck with more than two axles. This definition also includes facilities for scientific research, and the design, development, and testing of electrical, electronic, magnetic, optical, computer and telecommunications components in advance of product manufacturing, and the assembly of related products from parts produced off-site, where the manufacturing activity is secondary to the research and development activities.

RESIDENTIAL/FAMILY CARE HOME (5 OR FEWER RESIDENTS) A home with support and supervisory personnel that provides room and board, personal care and rehabilitation services in a family environment for not more than 6 resident handicapped persons and is certified by the State of South Carolina. This term excludes residential care facilities and halfway homes.

RESIDENTIAL CARE FACILITIES (6 OR MORE RESIDENTS) A staffed premises (not a single-family dwelling) with paid or volunteer staff that provides full-time care to more than 6 individuals. Residential care facilities include group homes, nursing homes, residential child-care facilities assisted living residences, adult care homes, retirement housing, congregate living services, assisted living services, continuing care retirement centers, skilled nursing services and orphanages. This term excludes residential/family care homes and halfway homes.

RESTAURANT A retail business selling ready- to-eat food and/or beverages for on or off- premise consumption. Customers may be served from an ordering counter (i.e. cafeteria or limited service restaurant); at their tables (full- service restaurant); and, at exclusively pedestrian-oriented facilities that serve from a walk-up ordering counter (snack and/or nonalcoholic bars).

SCHOOLS–ELEMENTARY & SECONDARY A public or private institution for education or learning including athletic or recreational facilities, but not including lodging. This includes any school licensed by the state and that meets the state requirements for elementary and secondary education. This may include remedial after school activities.

SCHOOLS–VOCATIONAL/TECHNICAL A public or private institution for education or learning including athletic or recreational facilities, but not including lodging. These schools offer vocational and technical training in a variety of technical subjects and trades. Training may lead to job-specific certification.

SEXUALLY ORIENTED BUSINESS (SOB)/ADULT ESTABLISHMENT Any establishment having a substantial portion of materials or entertainment characterized by an emphasis on sexual activities, anatomical genital areas, or the female breast as listed and defined in South Carolina Code of Laws Section 16-15-375. SOB uses and establishments include, but are not limited to, adult arcades, adult bookstores, adult cabarets, adult motels, adult motion picture theaters, adult theaters, adult video stores, escort motels, escort services, and sexual encounter centers, and any other establishment which contains activities characterized by the performance, depiction, or description of specific anatomical areas or specific sexual activities.

SHOOTING RANGE, INDOOR An enclosed indoor facility designed and operated for the use of rifles, shotguns, pistols, silhouettes, skeet, trap, black powder, air guns, archery or any other similar sport shooting. Indoor shooting range facilities are designed to offer a totally controlled shooting environment that includes impenetrable walls, floor and ceiling, adequate ventilation, lighting systems and acoustical treatment for sound attenuation suitable for the range's approved use.

SHOOTING RANGE, OUTDOOR A permanently located and improved area that is designed and operated for the use of rifles, shotguns, pistols, silhouettes, skeet, trap, black powder, air guns, archery or any other similar sport shooting in an outdoor environment.

SMALL EQUIPMENT REPAIR/RENTAL The repair and/or rental of small equipment as a primary use including televisions, computers, cleaning equipment, vacuum cleaners, and other equipment that can be transported by automobile, small truck/van.

SOLAR ENERGY SYSTEM Any device or combination of devices or elements which rely upon direct sunlight as an energy source, including but not limited to any substance or device which collects sunlight for use in the heating or cooling of a structure or building, the heating or pumping of water, or the generation of electricity. A solar energy system may be used for purposes in addition to the collection of solar energy. These uses include, but are not limited to, serving as a structural member or part of the roof of a building or structure and serving as a window or wall. A solar energy system may be mounted on the building or on the ground

and is not the principal use of the property.

SOLAR FARM An energy generation facility comprised of one or more freestanding, ground mounted devices that capture solar energy and convert it to electrical energy for use in locations other than where it is generated. Solar generation stations typically utilize photovoltaic solar cells, but can also be combinations of light reflectors, concentrators, and heat exchangers. A solar farm is also known as a solar power plant, solar generation plant, solar power plant, or solar thermal power plant.

SPORTS ARENA/STADIUM (4,000 OR MORE SEATS) A structure that is open or enclosed and used for games, concerts, and major events and is partly or completely surrounded by tiers of seats accommodating 4,000 or more spectators.

STORAGE-OUTDOOR STORAGE YARD The storage of various materials including, but not limited to, lumber, pipe, bricks, stone, shingles, mulch, soil, sand, gravel and other nonhazardous materials outside of a structure, as a principal use. This definition is not inclusive of any scrap metal, junk vehicles or other similar salvage materials.

STORAGE–SELF-SERVICE A building containing separate enclosed storage spaces of varying sizes leased or rented on an individual basis.

STORAGE-WAREHOUSE, INDOOR STORAGE Facilities for the storage of furniture, household goods, or other commercial goods of any nature. Includes cold storage. Does not include warehouse, storage, self-service or mini-storage facilities offered for rent or lease to the general public; warehouse facilities primarily used for wholesaling and distribution; or terminal facilities for handling freight.

STORAGE-WAREHOUSE, INDOOR STORAGE, RESTRICTED A facility that involves the storage of any hazardous materials or substances which would be subject to the reporting requirements of The Emergency Planning and Community Right-to-Know Act (EPCRA) also known as SARA Title III of 1980 (Sections 311-312, 42 U.S.C. §§ 11021-11022) and/or any facility which stores dangerous goods and/or hazardous substances that are covered by separate regulations, standards or codes which are classified on the basis of immediate physical or chemical hazards, such as fire, explosion, corrosion and toxicity and are in sufficient quantities such that accidental release of explosion may affect life, health, property or the environment beyond the immediate perimeter of the facility. These include: flammable gases, flammable liquids, flammable solids (self-reactive and related substances; and desensitized explosives), substances liable to spontaneous combustion, substances that when in contact with water emit flammable gases, oxidizing substances, organic peroxides, toxic substances, radioactive and corrosive substances.

STUDIO–ART, DANCE, MARTIAL ARTS, MUSIC Facilities for individual and group instruction and training in the arts; production rehearsal; photography, and the processing of photographs produced only by users of the studio facilities; martial arts training studios; gymnastics, yoga, and similar instruction; and aerobics and gymnastics studios with no other fitness facilities or equipment.

TEMPORARY USE A land use on an individual parcel or site established for a limited and fixed period of time for a purpose which may not normally be permitted in a zoning district, or which does not meet all zoning requirements, but which is necessary in special situations.

THEATER, INDOOR (MOVIE OR LIVE PERFORMANCE) A specialized theater for showing movies or motion pictures on a projection screen or a stage for live performances. This category also includes cineplexes and megaplexes, complex structures with multiple movie theaters, each theater capable of an independent performance. This does not include Sexually Oriented Businesses/Adult Entertainment.

THEATER, OUTDOOR (AMPHITHEATER) An establishment for the performing arts with open-air seating for audiences, usually circular or oval, in which tiers of seats rise from a central open avenue.

TRANSITIONAL SHELTER A facility that provides temporary housing within a religious institution. Such a facility is a temporary use and is distinct from the definition for Community Support Facility.

UTILITIES Facilities or systems for the distribution of gas, electricity, steam, or water, the collection, treatment and disposal of sewage or refuse; the transmission of communications; of similar functions necessary for the provision of public services. Radio transmission facilities less than 180 feet in height for use by ham radio operators or two-way radio facilities for business or governmental communications shall be deemed accessory uses and not utilities. Utilities are divided into 3 classes:

Class 1: Distribution, transmission and collection lines (above and below ground) including electrical,

solar panels, telephone/broadband internet, natural gas, waste water collection, and water distribution lines; pumping stations, lift stations, and telephone/broadband switching facilities (up to 200 square feet).

Class 2: Elevated water storage tanks; above ground natural gas facilities including regulator stations and Point of Delivery stations; package treatment plants; telephone/broadband switching facilities (over 200 square feet); substations; or other similar facilities in connection with telephone, electric, natural gas, steam, and water facilities, not including cellular communication towers.

Class 3: Generation, production, or treatment facilities such as power plants, water and sewage plants.

A utility facility, or expansion of such a facility, may not be found to be a public or private nuisance by reason of the operation of that facility if the utility facility:

1) is operating pursuant to and in compliance with the requisite licenses, permits, certifications, or authorizations under the applicable federal state environmental laws and county and municipal (if applicable) zoning ordinances; and
2) commenced operations before the landowner alleging the nuisance acquired, moved onto, or improved the affected property.

If a utility facility seeks to expand its operation or facility and maintain its protected status, then the utility facility may reasonably expand its operation or facilities without losing its protected status if it is in compliance with all county, municipal, state, and federal environmental codes, laws, or regulations at the time of expansion. This protected status of a utility facility, once acquired is assignable, alienable, and inheritable, provided the utility facility is operating for the same use as when it commenced operations or a reasonable expansion thereof as provided heretofore and the protected status may not be waived by the temporary cessation of operation for a period not to exceed two years or by diminishing the size of the operation. (Ord. No. 2019-1634, 1.27.20)

VEHICLE RENTAL/LEASING/SALES
Establishments which may have showrooms or open lots for selling, renting or leasing vehicles. May include car dealers for automobiles and light trucks, mobile homes, motorcycle, ATV, or boat and marine craft dealers.

VEHICLE SERVICES–MAJOR REPAIR/BODY WORK The repair, servicing, alteration, restoration, towing, painting or finishing of automobiles, recreational vehicles, and other personal vehicles as a primary use. This includes major repair and body work such as collision repair, painting services, tire recapping and other body work. This may be an accessory use to an establishment that provides vehicle rental/leasing/sales. "Vehicle Services – Minor," as well as the sale of vehicle parts, food and convenience items may also be included as an incidental part of such uses.

VEHICLE SERVICES–MINOR Facilities for the fueling, cleaning and servicing of automobiles, recreational vehicles, and other personal vehicles as a primary use. Examples include: gas stations; car washes (attended and self-service); car stereo and alarm system installers; detailing services; muffler and radiator shops; tire and battery sales and installation (not including recapping); and quick-lube services. Such uses may include structures that are specialized for selling gasoline with storage tanks, often underground or hidden. The sale of vehicle parts, food, and convenience items may be included as an incidental part of such uses.

VETERINARY CLINIC Establishments that include services by licensed practitioners of veterinary medicine, dentistry, or surgery for animals; boarding services for pets; and grooming.

WASTE COLLECTION AND RECYCLING A site, location, tract of land, or building that may be used for the purpose of collecting all types of residential waste and recyclables that are generated "off site" in the local community to be transported by public or private companies to a waste recycling, transfer or disposal/recovery facility, permitted by South Carolina Department of Health and Environmental Control (SCDHEC) as required. This use includes county collection (convenience) centers.

WHOLESALING AND DISTRIBUTION Establishments engaged in transferring, loading, unloading, buying and selling merchandise to and from retailers, contractors, trucking and freight companies, manufacturers, institutions, farms, other wholesalers, or other professional businesses. This includes establishments such as trucking terminals, goods transfer facilities, and other establishments acting as agents or brokers in buying, selling or otherwise transferring merchandise to or from the aforementioned entities. This does not include establishments engaged in selling goods and merchandise to the public. Specific examples of these establishments include:

1) Agents, merchandise or commodity brokers, and

commission merchants;
2) Assemblers, buyers and associations engaged in the cooperative marketing of farm products;
3) Merchant wholesalers;
4) Stores primarily selling electrical plumbing, heating and air conditioning supplies, and equipment; and
5) Trucking terminals.

WHOLESALING AND DISTRIBUTION, RESTRICTED A facility that involves the storage, wholesaling or distribution of any hazardous materials or substances that are not packaged for retail sale and are one site in quantities which would be subject to the reporting requirements of The Emergency Planning and Community Right-to-Know Act (EPCRA) also known as SARA Title III of 1980 (Sections 311-312, 42 U.S.C. §§ 11021-11022) and/or any facility which stores or distributes dangerous goods and/or hazardous substances that are covered by separate regulations, standards or codes which are classified on the basis of immediate physical or chemical hazards, such as fire, explosion, corrosion and toxicity and are in sufficient quantities such that accidental release of explosion may affect life, health, property or the environment beyond the immediate perimeter of the facility. These include: flammable gases, flammable liquids, flammable solids (self-reactive and related substances; and desensitized explosives), substances liable to spontaneous combustion, substances that when in contact with water emit flammable gases, oxidizing substances, organic peroxides, toxic substances, radioactive and corrosive substances.

WINERY An agricultural processing facility used for the commercial purpose of processing grapes, other fruits products or vegetables to produce wine or wine related spirits, excluding beer and liquor. Processing includes wholesales sales, crushing, fermenting, blending, aging, storage, bottling, administrative office functions of wine and related promotional items and winery tours may be permitted as part of the winery operations.

WIRELESS COMMUNICATIONS TRANSMISSION FACILITIES A tower, pole, or similar structure more than 30 feet in height erected on the ground or on a building or other structure, used primarily for the support of one or more antenna(e) which are used as support for any personal wireless services as defined in the Federal Telecommunications Act of 1996 including cellular, personal communications services (PCS), paging equipment, and similar services that currently exist or may in the future be developed. This term shall not include radio and television stations' antenna(e), residential television antenna, any antenna(e) which is part of a communication system used by a business to communicate with their employees or satellite dishes, etc.

10.4 DEFINITIONS, GENERALLY

ABUTTING Having common property lines. Property separated by a street or alley is not considered abutting.

ACCELERATED EROSION Any increase over the rate of natural erosion as a result of land-disturbing activity.

ACCESSORY STRUCTURE (APPURTENANT STRUCTURE) Structures that are located on the same parcel of property as the principal structure and the use of which is incidental to the use of the principal structure. Accessory Structures should constitute a minimal investment, may not be used for human habitation, and be designed to have minimal flood damage potential. Examples of accessory structures are detached garages, carports, storage sheds, pole barns, and hay sheds.

ACTIVE USE A use other than parking.

ADDITION (TO AN EXISTING BUILDING) An extension or increase in the floor area or height of a building or structure. Additions to existing buildings shall comply with the requirements for new construction regardless as to whether the addition is a substantial improvement or not. Where a firewall or load-bearing wall is provided between the addition and the existing building, the addition(s) shall be considered a separate building and must comply with the standards for new construction.

ADEQUATE DOWNSTREAM STORMWATER CAPACITY A stormwater management system shall be considered to have adequate downstream stormwater capacity if the system can be shown to store or convey up to and including the 100-year stormwater runoff without increasing damage to adjoining properties or to a point downstream known to the Administrator or designee to be a restriction causing significant backwater.

ADEQUATE EROSION CONTROL MEASURE, STRUCTURE, OR DEVICE One which controls the soil material within the land area under responsible control of the person conducting the land-disturbing activity.

ADMINISTRATOR The Planning Director, the Zoning Official, the Public Works Director, Building Official, Fire Marshal, or Emergency Services Director and their subordinate staffs are collectively referred to as the Administrator for the purpose of enforcing the provisions contained in this ordinance.

AFFILIATE A person that directly, or indirectly through one or more intermediaries, controls, is controlled by, or is under common control of another person.

AGRICULTURAL PRACTICES These practices include normal farming, silviculture and ranching activities such as gardening, plowing, seeding, cultivating, harvesting for the production of food, fiber, forest products, nursery stock and livestock; maintenance of agricultural drain tiles, irrigation and drainage ditches; maintenance of farm roads and other access areas for farm vehicles and equipment use.

AGRICULTURAL STRUCTURE A structure used solely for agricultural purposes in which the use is exclusively in connection with the production, harvesting, storage, drying, or raising of agricultural commodities, including the raising of livestock. Agricultural structures are ***not*** exempt from the provisions of this ordinance.

AIRPORT McWhirter Field.

AIRPORT OBSTRUCTION Any living or man-made structure or tree which obstructs the aerial approaches of the airport exceeding the maximum height of structures permitted in the airport operation area or is otherwise hazardous to its use for landing or taking off.

AIRPORT OPERATION AREA All zones established in this Ordinance.

ALLEY Alleys are intended to provide indirect, limited access to the rear of properties but not to accommodate through traffic. Utilities, either above ground or underground, may be located in alleyways to provide service connections to rear elevations.

ANTENNA A transmitting an/or receiving device used in telecommunications that radiates or captures radio and/or television signals.

APARTMENT BUILDING A building type that accommodates 12 or more attached dwelling units vertically and horizontally integrated.

APARTMENT COURT A building type that accommodates 12 or more dwelling units vertically and horizontally integrated and organized around a courtyard that fronts a primary street.

APIARY The assembly of 1 or more colonies of bees at a single location.

APPEAL A request for a review of the local floodplain administrator's interpretation of any provision of this ordinance.

APPLICANT Any person, firm or governmental agency who owns property or the duly appointed representative that wishes to develop that property and one who executes the necessary forms to procure a permit to carry out such development from the County.

AREA OF SHALLOW FLOODING A designated AO or VO Zone on a community's Flood Insurance Rate Map (FIRM) with base flood depths of 1 foot to 3 feet where a clearly defined channel does not exist, where the path of flooding is unpredictable and indeterminate, and where velocity flow may be evident.

AREA OF SPECIAL FLOOD HAZARD The land in the floodplain within a community subject to a one percent or greater chance of being equaled or exceeded in any given year.

AS-BUILT DRAWINGS As-built surveys, drawings, or plans must be prepared by a land surveyor licensed in the state of South Carolina. Horizontal survey datum control shall be based upon, and referenced to, South Carolina State Plane, NAD83 HARN, International Feet coordinates. Vertical survey datum control shall be based upon, and referenced to, the North America Vertical Datum of 1988 (NAVD 88).

ATTIC A habitable or uninhabitable space within a building situated within the structure of a pitched roof and above the uppermost story.

AVENUE Avenues serve as connectors between neighborhoods and area centers. As such, they are used both in residential and commercial areas, often terminating at prominent buildings or plazas. Avenues may also circulate around squares or neighborhood parks.

AVIGATION EASEMENT Ownership of the right of imposition upon such property of overflight, excessive noise, vibration, smoke, dust, vapors, and particulates due to the operation of aircraft to and from the airport. Also includes the right to remove airport obstructions on said properties.

AWNING/CANOPY A wall-mounted, cantilevered structure providing shade and cover from the weather for a sidewalk.

AWNING / CANOPY SIGN A sign where graphics or symbols are painted, sewn or otherwise adhered to the awning material as an integrated part of the awning itself.

BALCONY A platform projecting from the wall of a building with a railing along its outer edge, often with access from a door or window.

BASE FLOOD The flood having a one percent chance of being equaled or exceeded in any given year.

BASE FLOOD ELEVATION (BFE). A determination as published in the flood insurance study of the water surface elevations of the base flood.

BASEMENT Means any enclosed area of a building that is below grade on all sides.

BASIN Sub-watershed area within the County of Lancaster.

BASIN PLAN Study and evaluation of an individual drainage basin's stormwater management, flood control, and restoration/mitigation needs.

BEE Any stage of the common domestic honey bee, apis mellifera species.

BEST MANAGEMENT PRACTICES (BMPS) means design, construction, and maintenance practices and criteria for stormwater facilities that minimize the impact of stormwater runoff rates and volumes, prevent erosion and capture pollutants.

BLANK WALL AREA A portion of the exterior façade of the building that does not include substantial material change (paint color is not considered a substantial change); windows or doors; or columns, pilasters or other articulation greater than 12 inches in depth.

BRACKET SIGN A sign attached to the ground by one or more support structures that is not higher than 5 feet and hangs from a bracket or support.

BORROW A fill material which is required for on-site construction and is obtained from other locations.

BOULEVARD Boulevards provide multi-lane access to commercial and mixed-use developments. Boulevards also serve to carry regional traffic throughout the County.

BUFFER An area of predominantly vegetated land to be left open, adjacent to drainageways, wetlands, lakes, ponds, or other surface waters for the purpose of eliminating or minimizing adverse impacts to such areas.

BUILD-TO ZONE The area on the lot where a certain percentage of the front building façade must be located, measured as a minimum and maximum setback range from the edge of the right-of-way.

BUILDING See Structure.

BUILDING ELEMENT A component of a building as described in Chapter 3.

BUILDING ELEVATIONS Scaled, two-dimensional drawings used in development applications to accurately represent proposed building heights, floor levels, and building materials. These drawings typically illustrate each elevation (or façade) visible from a public street or civic space.

BUILDING FACADE The face of a building that delineates the edge of conditioned floor space.

BUILDING FLOOR AREA The gross floor area of an individual structure built for support, shelter or enclosure for any occupancy, or storage.

BUILDING TYPE A building type defined by its form and function in Section 3.1.

BUILT-UPON AREA (BUA) That portion of a development project that is covered by impervious or partially impervious surface including, but not limited to, buildings; pavement and gravel areas such as roads, parking lots, and paths; and recreation facilities such as tennis courts. "Built-upon area" does not include a wooden slatted deck, the water area of a swimming pool, or pervious or partially pervious paving material to the extent that the paving material absorbs water or allows water to infiltrate through the paving material.

BYPASS means to route tributary drainage area runoff around and not through a stormwater control structure.

CABINET SIGN A sign that is mounted on the face of a building or on the ground that is typically rectangular in shape and provides for internal illumination and changing the message of the sign by replacing a single transparent or translucent panel.

CANOPY SIGN A sign placed on a canopy so that the display surface is parallel to the plane of the wall.

CARRIAGE HOUSE A rear detached accessory dwelling unit located at grade or above a garage that is associated with a detached house building type.

CERTIORARI A writ seeking supervisory judicial review. Appeals "in the nature of certiorari" means that the Court will review the case based on the record as presented to and acted on by the board or commission conducting the original review hearing, and review whether or not the board or commission followed proper procedures. In such reviews, the Court cannot hear or consider new evidence or testimony not already contained in the record.

CHANGEABLE SIGN A permanent sign, or portion thereof, that is specifically designed to allow periodic changes in the informational content or display by manual or electric (electrically illuminated or mechanically driven changeable segments) means.

CHANNEL MODIFICATION Alteration of a stream channel by changing the physical dimensions or materials of its bed or banks. Channel modification includes damming, rip-rapping or other armoring, widening, deepening, straightening, relocating and lining and significant removal of bottom or woody vegetation of the channel. Channel modification does not include the clearing of dead or dying vegetation, debris, or trash from the channel.

CHEMICAL STORAGE FACILITY A building, portion of a building, or exterior area adjacent to a building used for the storage of any chemical or chemically reactive products.

CIVIC BUILDING A building type that accommodates specifically identified civic uses.

CIVIC SPACE Improved space set aside for public use and recreation that is comprised of one or more of the following typologies (as described in Chapter 3) Green, Square, Playground, and Community Garden.

COLONY A hive and its equipment and appurtenances, including bees, comb, honey, pollen, and brood.

COMMERCIAL STREET Main streets are intended to provide access to neighborhoods and high-density residential and commercial areas.

COMPENSATORY STORAGE An excavated, hydraulically equivalent volume of storage used to offset the loss of natural flood storage capacity when artificial fill or structures are placed within a regulatory floodplain.

COMPLETION OF CONSTRUCTION OR DEVELOPMENT No further land-disturbing activity is required on a phase of a project except that which is necessary for establishing a permanent ground cover.

CONDITIONAL APPROVAL REGULATORY FLOODWAY MAP Preconstruction approval by the Federal Emergency Management Agency of a proposed change to the regulatory floodway map and/or BFE. This pre-construction approval, pursuant to this part, gives assurance to the property owner that once an appropriate use is constructed according to permitted plans, the regulatory floodway map and/or BFE can be changed, as previously agreed, upon review and acceptance of as-built plans.

CONDITIONAL LETTER OF MAP REVISION (CLOMR) A letter which indicated that the Federal Emergency Management Agency will revise base flood elevations, flood insurance rate zones, flood boundaries or regulatory floodway and/or BFE as shown on an effective flood hazard boundary map or flood insurance rate map, once the as-built plans are submitted and approved.

CONSTRUCTION DOCUMENTS A component of a site plan or other development application that includes the full and complete set of engineered drawings necessary for final permitting and construction.

CONTROL STRUCTURE A structure designed to control the rate of flow that passes through the structure, given a specific upstream and downstream water surface elevation.

COTTAGE COURT A development building type with 5 to 9 detached houses organized around a common courtyard that fronts a primary street.

COUNTY Lancaster County

COUNTY COUNCIL The County Council of Lancaster County.

CRITICAL FACILITY A facility that is critical to the community's public health and safety, is essential to the orderly functioning of a community, store or produce highly volatile, toxic or water-reactive materials, or house occupants that may be insufficiently mobile to avoid loss of life or injury. Examples of critical facilities include jails, hospitals, schools, fire stations, nursing homes, wastewater treatment facilities, water plants, and gas/oil/propane storage facilities.

CROWN SIGN A wall sign extending not more than 3 feet located on the upper horizontal band of a building at least 55 feet in height.

DAM Any artificial barrier, together with appurtenant works, including, but not limited to, dams, levees, dikes or floodwalls for the impoundment or diversion of water or other fluids where failure may cause danger to life or property.

DAMAGE A measurable rise in flood heights on property currently subject to flooding, flooding of property currently not subject to flooding unless it is contained within the streambanks or a deed or plat restricted area or increases in velocounty to the point where the rate of land lost to erosion and scour is significantly increased.

DEED OR PLAT RESTRICTION Permanent easements, covenants, deed restricted open spaces, outlots, reserved plat areas, and conservation easements dedicated to meet the requirements of this article, or public road rights-of-way that contain any part of the stormwater management system of a development.

DEPRESSIONAL STORAGE AREAS Nonriverine depressions where stormwater collects.

DESIGN STORM A selected storm event, described in terms of the probability of occurring once within a given number of years, for which stormwater or flood control improvements are designed and built.

DETACHED HOUSE A building type that accommodates one dwelling unit on an individual lot with yards on all sides along with a rear accessory dwelling unit at grade or above a garage.

DETENTION FACILITY A manmade structure for the temporary storage of stormwater runoff with controlled release during or immediately following a storm.

DETENTION VOLUME SAFETY FACTOR A multiplication factor applied to a development's detention volume when the detention facility is constructed on-stream.

DEVELOPED COMMERCIAL/INDUSTRIAL PROPERTY Developed property which does not serve the primary purpose of providing permanent dwelling units for single-family detached units, regardless of the zoning district in which such property is located. Such property shall include all multi-residential and nonresidential property, including, but not limited to, duplexes, apartment buildings and complexes, condominiums, boardinghouses, commercial properties, industrial properties, parking lots, recreational, institutional and governmental facilities, hotels, offices, schools and other educational facilities, theaters and other facilities for performances, and churches and other religious institutions.

DEVELOPED PROPERTY Real property which has been altered from its natural state by the addition and attachment of any improvements such as buildings, structures or other impervious area. For new construction, property shall be considered developed property upon final approval of site improvements by the County.

DEVELOPED RESIDENTIAL PROPERTY Developed property which serves the primary purpose of providing a permanent dwelling unit, regardless of the zoning district in which such property is located, for single-family detached units and duplexes, and which may or may not have accessory uses related to the purpose of providing permanent dwelling facilities.

DEVELOPMENT Any man-made change to improved or unimproved real estate, including, but not limited to, buildings or other structures, mining, dredging, filling, grading, paving, excavation or drilling operations, or storage of equipment or materials.

DEVELOPMENT FLOOR AREA The total building floor area of any construction projects simultaneously developed by a single developer.

DIAMETER BREAST HEIGHT (DBH) The diameter of a tree as measured at a point 4.5 feet above the tree's base.

DIRECTIONAL/IDENTIFICATION SIGN A sign used to display only the name, address, crest, trademark, and/or profession of the business, individual, family, organization or enterprise occupying the premises, or the name of the building on which the sign is displayed.

DISCHARGE POINT A point at which stormwater runoff leaves a tract of land.

DISPOSAL Defined as in South Carolina Code of Laws, Title 44.

DISTURBANCE An area where the land surface has been cleared, grubbed, compacted, or otherwise modified to alter stormwater runoff, volumes, rates, flow direction, or inundation duration.

DRAINAGE AREA The land area above a given point that contributes stormwater to that point.

DRAINAGEWAY A natural or artificial stream, closed conduit, or depression that carries surface water.

DRY DETENTION FACILITY A dry detention facility is a detention facility designed to drain completely after temporary storage of stormwater flows and to normally be dry over the majority of its bottom area.

DWELLING or DWELLING UNIT A building or structure, or part of a building or structure, providing complete independent living facilities for one or more persons, including permanent provisions for living, sleeping, eating, cooking and sanitation and meeting the habitability requirements of the International Residential Code.

ELEVATED BUILDING A non-basement building built to have the lowest floor elevated above the ground level by means of solid foundation perimeter walls, pilings, columns, piers, or shear walls parallel to the flow of water.

ELEVATION CERTIFICATE A form published by the Federal Emergency Management Agency that is used to certify the elevation to which a building has been constructed.

EMERGENCY OVERFLOW The structure in a stormwater management system designed to protect the system in the event of a malfunction of the primary flow structure or a storm event greater than the system design. The emergency overflow capacity initiates at the facility design high water level or base flood elevation.

ENCROACHMENT The advance or infringement of uses, fill, excavation, buildings, permanent structures or development into a floodplain, which may impede or alter the flow capacity of a floodplain.

ENERGY DISSIPATOR A structure or a shaped channel section with mechanical armoring placed at the outlet of pipes or conduits to receive and break down the energy from high velocity flow.

ENVIRONMENTAL SURVEY A component of a development application that identifies forest stands or trees of a uniform size and species; specimen trees of varying sizes and species, particularly free standing or open-grown or field grown trees; a distinctive tree line or forest edge; existing watercourses; previously documented Federally and State recognized endangered species habitats; and historic or culturally significant areas.

EQUIVALENT RESIDENTIAL UNIT (ERU) The total impervious area of a typical single-family residential property, and is determined as the median impervious area of a representative sample, as determined by Lancaster County, of all developed residential properties in the single-family residential category. The equivalent residential unit is 2.389 square feet.

EROSION The wearing away of land surfaces by the action of wind, water, gravity, or any combination thereof.

EROSION AND SEDIMENT CONTROL PLAN A plan for the control of soil erosion and sediment resulting from land disturbing activity.

EXECUTIVE ORDER 11988 (FLOODPLAIN MANAGEMENT) Issued by President Carter in 1977, this order requires that no federally assisted activities be conducted in or have the potential to affect identified special flood hazard areas, unless there is no practicable alternative.

EXISTING CONSTRUCTION - Means, for the purposes of determining rates, structures for which the start of construction commenced before January 6, 1983.

EXISTING LOT Any tract of land, less than five acres, for which an approved plat has been recorded at the Lancaster County Register of Deeds office, or which is shown on a preliminary subdivision plat that has been approved by the Lancaster County Planning Commission as of the effective date of the UDO.

EXISTING MANUFACTURED HOME PARK OR MANUFACTURED HOME SUBDIVISION A manufactured home park or subdivision for which the construction of facilities for servicing the lots on which the manufactured homes are to be affixed (including, at a minimum, the installation of utilities, the construction of streets, and either final site grading or the pouring of concrete pads) is completed before January 6, 1983.

EXPANSION TO AN EXISTING MANUFACTURED HOME PARK OR SUBDIVISION The preparation of additional sites by the construction of facilities for servicing the lots on which the manufactured homes are to be affixed (including the installation of utilities, the construction of streets, and either final site grading or the pouring of concrete slabs).

FAA Federal Aviation Administration

FABRICATION SHOPS The assembly, fabrication, production or processing of goods and materials using processes that ordinarily do not create noise, smoke, fumes, odors, glare, or health or safety hazards outside of the building and are visually undifferentiated from an office building. This shall not include uses that require deliveries by trucks with more than two axles more frequently than once a day.

FALL ZONE Provides for adequate setbacks on all sides of a tower to prevent its fall from encroaching on adjoining properties.

FAMILY A single individual or collective body of persons in a domestic relationship based upon blood, marriage, adoption or legal custody, living as a separate, independent housekeeping unit, or a group of not more than 3 unrelated persons, all living together as a separate housekeeping unit.

FAR Federal Aviation Regulation

FEE The annual monetary amount charged to a property owner of record of real property for the services provided by the stormwater utility system and program.

FEMA The Department of Homeland Security, Federal Emergency Management Agency and its regulations codified as 44 CFR 59-79. The following documents are incorporated by reference and may be used by the local floodplain administrator to provide further guidance and interpretation of this article as found on FEMA's website at www.fema.gov:

1) All FEMA technical bulletins.

2) All FEMA floodplain management bulletins.
3) FEMA 348 protecting building utilities from flood damage.

FINAL PLAT The final map, drawing, or chart on which the subdivider's plat of subdivision is presented for approval and which, if approved by the Planning Department, will be submitted to the Register of Deeds for recording.

FLAG Any fabric, banner, or bunting containing distinctive colors, patterns, insignia, logo or symbols of any nation, government, any religious, civic or fraternal organization, any educational or cultural facility, or other entity.

FLOOD A general and temporary condition of partial or complete inundation of normally dry land areas from the overflow of inland or tidal waters, or the unusual and rapid accumulation of runoff of surface waters from any source.

FLOOD FREQUENCY A period of years, based on a statistical analysis, during which a flood of a stated magnitude may be expected to be equaled or exceeded.

FLOOD HAZARD BOUNDARY MAP (FHBM) An official map of a community, issued by the Federal Emergency Management Agency, where the boundaries of the areas of special flood hazard have been defined as Zone A.

FLOOD INSURANCE The insurance coverage provided under the national flood insurance program.

FLOOD INSURANCE RATE MAP (FIRM) An official map of a community, on which the Federal Emergency Management Agency has delineated both the areas of special flood hazard and the risk premium zones applicable to the community.

FLOOD INSURANCE STUDY The official report provided by the Federal Emergency Management Agency which contains flood profiles, as well as the Flood Boundary Floodway Map and the water surface elevation of the base flood.

FLOOD PRONE AREA See "Floodplain.

FLOOD ZONE A geographical area shown on a Flood Hazard Boundary Map or Flood Insurance Rate Map that reflects the severity or type of flooding in the area.

FLOODING The grade situated below the 100-year BFE of either a FEMA mapped stream or, as determined from a hydrological/hydraulic analysis, below the Q100 BFE elevation of an unmapped stream or conduit.

FLOODPLAIN OR FLOOD PRONE AREA Any land area susceptible to being inundated by water from any source.

FLOODPLAIN MANAGEMENT The operation of an overall program of corrective and preventive measures for reducing flood damage and preserving and enhancing, where possible, natural resources in the floodplain, including but not limited to emergency preparedness plans, flood control works, floodplain management regulations, and open space plans.

FLOODPLAIN REGULATIONS Included in Chapter 8 and through the UDO zoning and, subdivision regulations, building codes, health regulations, special purpose ordinances, and other applications of police power which control development in flood-prone areas. This term describes federal, state or local regulations in any combination thereof, which provide standards for preventing and reducing flood loss and damage.

FLOODPLAIN STUDY A study, formally adopted by the County, excluding base flood determinations performed for a specific development site that examines, analyzes, evaluates or determines the hydraulic and hydrologic characteristics of flood hazards for a basin or partial basin area. To be used as a regulatory instrument the study shall, at a minimum, meet the FEMA criteria specified in Guidelines and Specifications for Flood Hazard Mapping Partners, most current version.

FLOODPROOFING Any combination of structural and nonstructural additions, changes, or adjustments to structures, which reduce or eliminate risk of flood damage to real estate or improved real property, water and sanitation facilities, or structures with their contents.

FLOODPROOFING CERTIFICATE A form published by the Federal Emergency Management Agency that is used to certify that a building has been designed and constructed to be structurally dry floodproofed to the flood protection elevation.

FLOOD-RESISTANT MATERIAL Any building material capable of withstanding direct and

prolonged contact (minimum 72 hours) with floodwaters without sustaining damage that requires more than low-cost cosmetic repair. Any material that is water-soluble or is not resistant to alkali or acid in water, including normal adhesives for above-grade use, is not flood-resistant. Pressure-treated lumber or naturally decay-resistant lumbers are acceptable flooring materials. Sheet-type flooring coverings that restrict evaporation from below and materials that are impervious, but dimensionally unstable are not acceptable. Materials that absorb or retain water excessively after submergence are not flood resistant. Please refer to Technical Bulletin 2, *Flood Damage-Resistant Materials Requirements*, dated 8/08, and available from the Federal Emergency Management Agency. Class 4 and 5 materials, referenced therein, are acceptable flood-resistant materials.

FLOODWAY The channel of a river or other watercourse and the adjacent land areas that must be reserved in order to discharge the base flood without cumulatively increasing the water surface elevation more than one foot.

FORECOURT An open area at grade or within 30 inches of grade, that serves as an open space, plaza or outdoor dining area.

FREEBOARD A factor of safety usually expressed in feet above a flood level for purposes of flood plain management. "Freeboard" tends to compensate for the many unknown factors that could contribute to flood heights greater than the height calculated for a selected size flood and floodway conditions, such as wave action, bridge openings, and the hydrological effect of urbanization of the watershed.

FRONTAGE LANDSCAPE AREA A required landscaped area along any public street right- of-way.

FUNCTIONALLY DEPENDENT USE A use which cannot perform its intended purpose unless it is located or carried out in close proximity to water. The term includes only docking facilities, port facilities that are necessary for the loading and unloading of cargo or passengers, and ship building and ship repair facilities, but does not include long-term storage or related manufacturing facilities.

GALLERY A covered passage extending along the outside wall of a building supported by arches or columns that is open on 3 sides.

GARDEN APARTMENT A building type that accommodates 3 to 12 attached dwelling units vertically and horizontally integrated.

GAS Natural gas, flammable gas, or gas which is toxic or corrosive.

GAS PUMP ISLAND/CANOPY SIGN A sign attached to or painted on a gas pump island or canopy.

GENERAL BUILDING A building type that typically accommodates commercial uses.

GOVERNMENT SIGN Any sign, symbol, or device erected and maintained by a federal, state, county, or municipal government, or any such governmental agency, for traffic control, for designation of or direction to any school, hospital, historical site, or public service, property, or facility, or for legal notices.

GROSS FLOOR AREA The sum in square feet of the horizontal area of all floors of the building measured from the exterior walls or from the centerline when two buildings or units abut. Gross floor area includes basement floor area when more than 50% of the basement height is above the established curb level or above the finished lot grade level where the curb has not been established. Elevator shafts, stairwells, floor space used for mechanical equipment, attics, balconies and mezzanines, enclosed porches and floor area devoted to accessory uses is included in the calculation of gross floor area. However, the following is not included: any space devoted exclusively to on-site parking; or outdoor loading, display, storage, utility service areas; and uninhabited enclosed space on tops of roofs; or attic space having head room of less than 7'6".

GROUND COVER Any natural vegetative growth or other material which renders the soil surface stable against accelerated erosion.

GROUND FLOOR The floor of a building that is at or nearest to the level of the ground around the building. It does not include the floor of the basement.

GROUND FLOOR ELEVATION The height of the finished ground floor measured from the top of the abutting sidewalk.

GROUND/FREESTANDING SIGN A sign erected which is wholly independent of any building for

support and is for support and is permanently affixed to or constructed upon the lot on which it is located.

GROUND SIGN, LARGE A sign attached along its entire width to a continuous pedestal that is between 5 and 10 feet in height.

GROUND SIGN, SMALL A sign attached along its entire width to a continuous pedestal that is no higher than 5 feet

HABITABLE STRUCTURES A building or part thereof, designed to be used for human habitation as a residence or lodging regularly or intermittently, or any place of business which is regularly or intermittently inhabited or occupied by the general public: Habitable Structures include but are not limited to the following use types occupied by the general public: residential, lodging, office/service, commercial/entertainment, civic, educational/institutional, automotive, and industrial. Habitable Structures do not include: barns, storage buildings, utility/toolsheds, playhouses, doghouses, and garages and pool houses without sleeping quarters, etc.

HAZARD TO AIR NAVIGATION An obstruction determined to have a substantial adverse effect on the safe and efficient utilization of navigable airspace.

HAZARDOUS WASTE MANAGEMENT FACILITY A facility for the collection, storage, processing, treatment, recycling, recovery, or disposal of hazardous waste as defined in South Carolina Code of Laws, Title 44.

HEIGHT The vertical distance from the ground elevation to the highest point of a structure or tree, including any appurtenance thereon expressed as feet above mean sea level (MSL).

HEIGHT, BUILDING The highest point of a pitched of flat roof measured from average grade.

HEIGHT LIMITATIONS No structure or tree shall be erected, altered, allowed to grow or maintained in any airport surface zone, with a height in excess of the height established for such zone. An area located in more than one of the following zones is considered to be only in the zone with the more restrictive height limitation.

HEIGHT, STORY The height of story measured from the top of the finished floor to the ceiling above.

HIGH QUALITY AQUATIC RESOURCES (HQAR) means waters of the United States or waters of the state that are determined to be critical due to their uniqueness, scarcity, function, and/or value.

HIGHEST ADJACENT GRADE The highest natural elevation of the ground surface, prior to construction, next to the proposed walls of the structure.

HIGHLY VOLATILE LIQUID (HVL) A hazardous liquid which will form a vapor cloud when released to the atmosphere and which has a vapor pressure exceeding 276 kPa (40 psia) at 37.8°C (100 °F).

HISTORIC STRUCTURE Any structure that is:

1) Listed individually in the National Register of Historic Places (a listing maintained by the U.S. Department of the Interior (DOI)) or preliminarily determined by the Secretary of the Interior as meeting the requirements for individual listing on the National Register;

2) Certified or preliminarily determined by the Secretary of the Interior as contributing to the historical significance of a registered historic district or a district preliminarily determined by the Secretary to qualify as a registered historic district;

3) Individually listed on a State inventory of historic places;

4) Individually listed on a local inventory of historic places in communities with historic preservation programs that have been certified (a) by an approved State program as determined by the Secretary of Interior, or (b) directly by the Secretary of Interior in states without approved programs. Some structures or districts listed on the State or local inventories ***MAY NOT*** be "Historic" as cited above, but have been included on the inventories because it was believed that the structures or districts have the ***potential*** for meeting the "Historic" structure criteria of the DOI. In order for these structures to meet NFIP historic structure criteria, it must be demonstrated and evidenced that the South Carolina Department of Archives and History has ***individually determined*** that the structure or district meets DOI historic structure criteria.

HIVE A structure intended for the housing of a bee colony.

HYDRAULICALLY EQUIVALENT COMPENSATORY STORAGE Compensatory storage placed between the proposed normal water elevation and the proposed 100-year flood elevation. All storage lost or displaced below the existing ten-year flood elevation is replaced below the proposed ten-year flood elevation. All storage lost or displaced above the existing ten-year flood elevation is replaced above the proposed ten-year flood elevation.

HYDROLOGIC AND HYDRAULIC CALCULATIONS Engineering analysis which determines expected flood flows and flood elevations based on land characteristics and rainfall events.

HYDROPHYTIC VEGETATION Plant life typically adapted for life in saturated soil conditions or water.

ILLICIT DISCHARGE Any discharge or dumping of material into the stormwater management system, a floodprone area, or a water of the U.S./state that is not composed entirely of stormwater, except for discharges allowed under a National Pollution Discharge Elimination System (NPDES) permit or nonpolluting flows.

IMPERVIOUS SURFACE Impervious surface area includes any material which reduces and prevents absorption of stormwater into previously undeveloped land. This includes but is not limited to, buildings, roads, pavement, gravel surfaces, etc. Items not considered to be "impervious" include the water area of a swimming pool and wooden slatted decks.

IMPERVIOUS SURFACE AREA means a surface which, because of its composition or compacted nature, impedes or prevents natural infiltration of water into the soil, including but not limited to roofs, decks, driveways, patios, sidewalks, parking areas, tennis courts, streets, or compacted gravel surfaces.

IMPERVIOUS SURFACE AREA RATIO The ratio of impervious surface to total parcel area.

IMPROVED SITE AREA The sum of the horizontal area of the outside portion of the site and includes any space devoted to on-site parking; outdoor loading, display, storage, utility service, decorative areas and landscaped areas that are part of the original site plan approval.

IN-KIND REPLACEMENT (CULVERT) An in-kind culvert replacement has an equivalent cross-sectional area, shape, roughness coefficient, and inlet and outlet elevations; or the replacement may be shown to have an equivalent hydraulic capacity using appropriate engineering calculations.

INCREASED COST OF COMPLIANCE (ICC) Applies to all new and renewed flood insurance policies effective on and after June 1, 1997. The NFIP shall enable the purchase of insurance to cover the cost of compliance with land use and control measures established under Section 1361. It provides coverage for the payment of a claim to help pay for the cost to comply with State or community floodplain management laws or ordinances after a flood event in which a building has been declared substantially or repetitively damaged.

LAKE OR NATURAL WATERCOURSE A natural or artificial body of water encompassing an area of two or more acres which retains water throughout the year. Any stream, river, brook, swamp, sound, bay, creek, run, branch, canal, waterway, estuary, and any reservoir, lake or pond, natural or impounded in which sediment may be moved or carried in suspension, and which could be damaged by accumulation of sediment.

LAND DISTURBING ACTIVITY Any activity which results in changes in the volume or flow rates of rainfall runoff, soil erosion from water or wind; or the movement of sediments into state waters or onto land within the state, including, but not limited to, clearing, dredging, grading, excavating, transporting, and filling of land.

LAND USE COMPATIBILITY The use of land adjacent to McWhirter Field that does not endanger the health, safety, or welfare of the owners' occupants or users of the land.

LAND USE PLAN A comprehensive plan prepared by the County Council upon recommendation of the Planning Commission which indicates the general locations recommended for the various functional classes of public works, places and structures and for the general physical development of theLancaster County and includes any unit or part of such plan separately adopted and any amendment to such plan or parts thereof.

LANDSCAPED ISLAND A landscaped area placed at the ends of all parking bays or aisles (other than perimeter parking bays or aisles) or where required along traffic channels.

LANDSCAPED PROTRUSION An extension from the outer perimeter of a parking lot that extends from the perimeter into the parking lot.

LANE Lanes are small traveled ways intended to provide direct access to the front of a limited number of single-family structures. Lanes are limited in the number of lots served. Generally, they are very short; often less than 400 feet. Items including, but not limited to, traffic carrying capacity, topography and connectivity, shall be a consideration when permitting a lane in lieu of a street.

LARGE PARKING LOT A parking lot where the number of parking spaces exceeds 100.

LATERAL ADDITION Improvements that increase the building footprint square footage. If the common wall is demolished as part of the project, then the entire structure must be elevated. If only a doorway is knocked through the existing structure, then only the additional has to be elevated.

LETTER OF MAP AMENDMENT (LOMA) The official determination by FEMA that a specific structure is not in a special flood hazard area; amends the effective flood hazard boundary map (FHBM) or flood insurance rate map (FIRM).

LETTER OF MAP REVISION (LOMR) A letter issued by FEMA that revises base flood elevation, flood insurance rate zones, flood boundaries or regulatory floodways as shown on an effective flood hazard boundary map or flood insurance rate map.

LEVEL OF SERVICE (LOS) A qualitative assessment of a transportation facility's operating conditions indicating the extent or degree of service provided by, or proposed to be provided by, the facility based on and related to the operational characteristics of the facility.

LIMITED STORAGE An area used for storage and intended to be limited to incidental items that can withstand exposure to the elements and have low flood damage potential. Such an area must be of flood resistant or breakaway material, void of utilities except for essential lighting and cannot be temperature controlled. If the area is located below the base flood elevation in an A, AE and A1-A30 zone it must meet the requirements of Article IV.A.4 of this ordinance. If the area is located below the base flood elevation in a V, VE and V1-V30 zone it must meet the requirements of Article IV.F of this ordinance.

LITTORAL ZONES Such zones are described as follows:

1) The littoral zone is that portion of a wet detention pond which is designed to contain rooted aquatic plants. The littoral area is usually provided by extending and gently sloping the sides of the pond down to a depth of two to three feet below the normal water level or control elevation. Also, the littoral zone can be provided in other areas of the pond that have suitable depths (i.e., a shallow shelf in the middle of the lake).

2) The littoral zone is established with native aquatic plants by planting and/or the placement of wetland soils containing seeds of native aquatic plants. A specific vegetation establishment plan must be prepared for the littoral zone. The plan must consider the hydroperiod of the pond and the type of plants to be established.

LOCAL GOVERNMENT Any county, incorporated village, town or city, or any combination of counties, incorporated villages, towns, and cities.

LOT A portion of a subdivision or any other parcel of land intended as a unit for transfer or ownership or for development or both. The word lot includes

plot, parcel or tract.

LOT AREA The area included within the rear, side and front lot lines. Lot area does not include existing or proposed right-of-way, whether dedicated or not dedicated to public use.

LOT DEPTH The distance between the front and rear property lines measured along a line midway between the side property lines.

LOT OF RECORD A lot which is a part of a subdivision, a plat of which has been recorded in the Office of the Register of Deeds of Lancaster County; or a lot described by metes and bounds in a deed of conveyance which has been recorded in the Lancaster County Registry; or a lot on which the building or buildings and improvements for a condominium or townhouse development are to be located; or a residential site where a condominium unit or townhouse development is to be located, which said description shall be contained in a duly recorded declaration creating and establishing a condominium unit or townhouse ownership.

LOT WIDTH The distance between the two side lot lines measured at the primary street property line along a straight line or along the chord of the property line on a curvilinear lot.

LOW IMPACT DEVELOPMENT (LID) A stormwater management strategy concerned with maintaining or restoring the natural hydrologic functions of a site to achieve natural resource protection objectives and fulfill environmental regulatory requirements.

LOWEST ADJACENT GRADE (LAG) Is an elevation of the lowest ground surface that touches any deck support, exterior walls of a building or proposed building walls.

LOWEST FLOOR The lowest floor of the lowest enclosed area (including basement). An unfinished or flood resistant enclosure, usable solely for parking of vehicles, building access or storage in an area other than a basement area is not considered a building's lowest floor; provided, that such enclosure is not built so as to render the structure in violation of the applicable non-elevation design requirements of this ordinance.

MAIN A distribution line that serves as a common source of supply for more than one service line.

MANUFACTURED HOME A structure, transportable in one or more sections, which is built on a permanent chassis and designed to be used with or without a permanent foundation when connected to the required utilities. The term "manufactured home" does not include a "recreational vehicle".

MANUFACTURED HOME PARK OR SUBDIVISION A parcel (or contiguous parcels) of land divided into two or more manufactured home lots for rent or sale. as to render the structure in violation of the applicable non-elevation design requirements of this ordinance.

MARKET VALUE shall be determined based on:

1) An independent appraisal by a professional appraiser. The appraisal must exclude the value of the land and not use the income capitalization approach which bases value on the use of the property, not the structure; or

2) Detailed estimates of the structure's actual cash value. The replacement cost for a building, minus a depreciation percentage based on age and condition.

MARQUEE SIGN Three dimensional signs projecting from the side of a building (typically theatres, arenas and hotels) which may extend above the roof line and/or incorporate changeable type.

MASTER PLAN A component of a development application that provides a detailed two-dimensional drawing illustrating all required site features, including buildings, parking areas, streets locations, street sections, rights-of-way, property lines and setbacks, required or proposed watercourse buffers, site landscaping and lighting (in conceptual form), and all related development calculations.

MEAN SEA LEVEL Means, for the purpose of this ordinance, the Nations Geodetic Vertical Datum (NGVD) of 1929, North American Vertical Datum (NAVD) of 1988, or other datum, to which the base flood elevations shown on a community's Flood Insurance Rate Maps (FIRM) are shown.

MEDIAN ISLAND A landscaped area in the center between 2 back-to-back parking rows in a parking bay.

MITIGATION Measures taken to eliminate or minimize damage from development activities, such as construction in wetlands or regulatory floodplain filling, by replacement of the resource.

MIXED USE BUILDING A multi-story building type

that typically accommodates ground floor retail uses with upper-story residential or commercial use.

MONUMENT SIGN A type of ground freestanding sign having the entire bottom of the sign affixed to the ground, not elevated on poles, pylons, etc. The widest dimension of a monument sign is at its base.

MULTI-TENANT COMMERCIAL DEVELOPMENT Any planned concentration of multiple commercial uses in one building or lot, or in multiple buildings or lots that are divided by a shared party wall, which utilize shared parking.

NATIONAL GEODETIC VERTICAL DATUM (NGVD) OF 1929 As corrected in 1929, elevation reference points set by National Geodetic Survey based on mean sea level.

NATURAL EROSION The wearing away of the earth's surface by water, wind, or other natural agents under natural environmental conditions undisturbed by man.

NATURAL, WHEN USED IN REFERENCE TO STREAMS AND CHANNELS Those streams and channels formed by the existing surface topography of the earth prior to changes made by man. A modified stream and channel which has regained natural characteristics over time as it meanders and reestablishes vegetation may be considered

NAUTICAL MILE A distance of 6,076 feet and one and three-eighths (1 3/8) inches.

NEW CONSTRUCTION Structures for which the "start of construction" commenced on or after January 6, 1983 and includes any subsequent improvements to such structures.

NEW IMPERVIOUS SURFACE Area which is created after the effective date (insert date)

NEW MANUFACTURED HOME PARK OR SUBDIVISION A manufactured home park or subdivision for which the construction of facilities for servicing the lots on which the manufactured homes are to be affixed (including at a minimum, the installation of utilities, the construction of streets, and either final site grading or the pouring of concrete slabs) is completed on or after January 6, 1983.

NONCONFORMING BUILDING OR DEVELOPMENT Any legally existing building or development which fails to comply with the current provisions of this ordinance.

NONCONFORMITY Any building, structure, use, sign, light source or other development feature which was erected legally, but which does not comply with subsequently enacted restrictions and regulations.

NONCONFORMING NON-ENCROACHMENT AREA The channel of a river or other watercourse and the adjacent land areas that must be reserved in order to discharge the base flood without cumulatively increasing the water surface elevation more than 1 foot as designated in the Flood Insurance Study report.

NONCONFORMING STRUCTURE Any structure or tree which does not conform to this Ordinance as of the effective date of these regulations.

NONCONFORMING USE Any structure or use of land which is inconsistent with the provisions of this Ordinance as of the effective date of these regulations.

NONRIVERINE REGULATORY FLOODPLAIN Regulatory floodplains not associated with streams, creeks, or rivers, such as isolated depressional storage area or lakes.

NORTH AMERICAN VERTICAL DATUM OF 1988 (NAVD) The datum listed as the reference datum on flood insurance rate maps should be used for elevation certificate and floodproofing certificate completion.

NUCLEUS COLONY A small colony used for educational purposes, queen maintenance and rearing, or for use in the capture and future integration of a swarm into a viable colony. A nucleus colony is comprised of significantly fewer bees than a conventional colony and is contained in a structure that is approximately one-half the size of a normal hive.

OFF-PREMISES SIGN A sign that draws attention to or communicates information about a business, service, commodity, accommodation, attraction, or other enterprise or activity that exists or is conducted, sold, offered, maintained, or provided at a location other than the premises on which the sign is located.

ON-PREMISES SIGN A sign that draws attention to or communicates information about a business, service, commodity, accommodation, attraction, or other enterprise or activity that exists or is conducted, sold, offered, maintained, or provided on the premises where the sign is located.

ON-STREAM DETENTION A detention facility constructed in whole or in part on a jurisdictional watercourse.

OPEN SPACE An area, land or water set aside and protected from development which may be left in a generally unimproved state without manmade structures and reserved for enjoyment in its unaltered state.

ORDINARY HIGH-WATER MARK The point on the bank or shore established by the fluctuations of water and indicated by physical characteristics. Distinctive marks may be present, such as by erosion, destruction, or prevention of terrestrial vegetation, predominance of aquatic vegetation, or other such recognized characteristics.

OUTDOOR AMENITY SPACE A predominately outdoor, open and uncovered area that serves as an outside amenity for occupants of a development.

OWNER Any individual, firm, association, syndicate, co-partnership, corporation, trust or any other legal entity having sufficient proprietary interest in the land sought to be subdivided to commence and maintain proceedings to subdivide.

OWNERSHIP PARCEL Any legally described parcel of land. This includes contiguous lots or parcels of land, owned in whole, or in part, by the same property owner.

PARENT means an affiliate that directly, or indirectly through 1 or more intermediaries, controls another person.

PARKING AISLE A single row of parking spaces.

PARKING BAY Two parking aisles located in a back-to-back configuration.

PEDESTRIAN SHED, LINEAR A pedestrian shed that is based on a one-quarter (1,320 feet) radius around a series of block lengths. Linear pedestrian sheds are useful in planning neighborhood main streets or neighborhoods with multiple nodes.

PEDESTRIAN SHED, STANDARD A pedestrian shed that is based on a one-quartered mile (1,320 feet) radius around a node. Standard pedestrian sheds are useful in planning neighborhoods.

PENINSULA, PROTRUSION OR AREAS THAT CHANNEL TRAFFIC All areas other than parking spaces or pedestrian walkways where traffic flow or direction is channeled or otherwise guided within the parking lot.

PERENNIAL STREAM Any stream displayed as a solid blue line on the most recent maps published by the U.S. Geological Survey, approved by the Army Corps of Engineers, or appearing on a map of perennial streams and wetlands approved by the Lancaster County Council.

PERIMETER LANDSCAPE AREA A landscaped area around a principle building that front upon a public street.

PERSON Any individual or group of individuals, firm, partnership, association, corporation or any other entity including local government.

PERSON CONDUCTING LAND-DISTURBING ACTIVITY Any person who may be held responsible for violation unless expressly provided otherwise by this ordinance.

PETROLEUM GAS - Propane, propylene, butane, (normal butane or isobutanes) , and butylene (including isomers), or mixtures composed predominantly of these gases, having a vapor pressure not exceeding 208 psi (1434 kPa) gage at 100 °F (38 °C).

PETROLEUM PRODUCT Flammable, toxic, or corrosive products obtained from distilling and processing of crude oil, unfinished oils, natural gas liquids, blend stocks and other miscellaneous hydrocarbon compounds.

PHASE OF GRADING One of 2 types of grading: rough or fine.

PLANT UNIT A specific number and type of plants required within the landscape area.

POLITICAL SIGN A temporary sign used in connection with a local, state, or national election or referendum.

POLLUTANT Any substance harmful to the environment that is not authorized for discharge from a storm sewer by a SCDHEC MS4 or NPDES permit.

POND A natural or artificial body of water of less than two acres which retains water year-round.

PORCH A raised structure attached to a building, forming a covered entrance to a doorway.

PORTABLE SIGN Pedestrian-scaled non-permanent signs which are not permanently affixed

to the ground, a building, or any other surface. Such signs are used to display menus, daily specials, sale announcements, and similar messages. These signs include signs attached to or painted on vehicles parked and visible from the public right-of-way, unless said vehicle is used in the normal day-to-day operations of the business.

POST-FIRM Construction or other development which started on or after January 6, 1983.

PRE-FIRM Construction or other development which started before January 6, 1983.

PRECISION INSTRUMENT RUNWAY A runway end having instrument approach procedure utilizing air navigation facilities with horizontal and vertical guidance, or area type navigation equipment, for which a straight-in precision instrument approach procedure has been approved or planned.

PRE-DEVELOPMENT Predevelopment conditions for the purpose of the UDO assume land use conditions prior to the proposed development or re-development. In such cases where development is initiated prior to receiving appropriate local, state, and federal permits, the existing land use condition will be assumed to be native forest.

PRELIMINARY PLAT A map or plat of a parcel of land which is to be or has been subdivided, containing sufficient data in order that a determination may be readily made as to the location, bearing, and length of every street and alley line, lot line, easement boundary line, and other boundary line, and meeting the required standards of this ordinance and approved following the procedures in this ordinance.

PRIMARY FACADE A building facade which faces a street, private drive, parking area, park or civic space.

PRIMARY FRONTAL DUNE A continuous or nearly continuous mound or ridge of sand with relatively steep seaward and landward slopes immediately landward and subject to erosion and overtopping from high tides and waves during coastal storms. The inland limit of the primary frontal dune occurs at the point where there is a distinct change from a relatively steep slope to a relatively mild slope.

PROJECTING/SUSPENDED SIGN A pedestrian-scaled sign that is wholly or partly dependent upon a building for support, which projects at an angle away from the building, extending more than one foot and can be read from both sides.

PROPERTY OWNER OF RECORD The person identified as owner by County tax records.

PROTECTED DISTRICT The zoning district that is protected by a landscape buffer.

PUBLIC FLOOD CONTROL PROJECT A flood control project within a deed or plat restricted area, which will be operated and maintained by a public agency to reduce flood damages to existing buildings or structures. A land stewardship not-for-profit corporation, or similar entity, may also own, operate, or maintain a public flood control project. In this circumstance, there shall also be an executed agreement with a public agency to take over ownership, operation, or maintenance if the corporation dissolves or fails to meet the operation and maintenance requirements for the project area. The project shall include a hydrologic and hydraulic study of the existing and proposed conditions of the watershed area affected by the project. Nothing in this definition shall preclude the design, engineering, construction, or financing, in whole or in part, of a flood control project by persons or parties who are not public agencies.

PUBLIC ROAD OR TRAIL DEVELOPMENT Any development activities which take place in a public right-of-way or part thereof or easement that is administered and funded, in whole or in part, by a public agency under its respective roadway jurisdiction. A public road development located within a regulatory floodway and which has been approved by the South Carolina Department of Transportation is exempt from the hydraulic analysis requirements of the UDO. Individual recreation trail systems being constructed as part of another development project are not considered public road or trail development.

PUBLIC SIDEWALK An improved surface paralleling a street, road, or alley that is used as a public pedestrian walkway. This sidewalk shall not include any privately installed and maintained areas located adjacent to the public sidewalk that is used primarily to provide a pedestrian linkage between the abutting property and the public sidewalk.

RACEWAY An enclosed channel of metal or nonmetallic materials designed expressly for holding wires or cables associated with illuminating a sign.

REAL ESTATE SIGN A sign displayed for the

purpose of offering for sale, lease, or rental the property on which such sign is displayed.

RECONSTRUCTION The act of rebuilding a structure.

RECREATIONAL VEHICLE A vehicle which is:

1) Built on a single chassis;
2) 400 square feet or less when measured at the largest horizontal projection;
3) Designed to be self-propelled or permanently towable by a light-duty truck; and
4) Designed primarily not for use as permanent dwelling, but as temporary living quarters for recreational, camping, travel, or seasonal use.

REGISTERED PROFESSIONAL ENGINEER An engineer licensed in the state under the S.C. Code of Regulations Chapter 49.

REGULATORY FLOOD PROTECTION ELEVATION The elevation to which all structures and other development located within the special flood hazard areas must be elevated, or floodproofed if non-residential. Within such areas where base flood elevations (BFEs) have been determined, this elevation shall be the BFE plus 2.5 feet of freeboard. In such areas where no BFE has been established, this shall be 2.5 feet above the highest adjacent grade.

REMEDY A VIOLATION To bring a structure or other development into compliance with State or community floodplain management regulations, or, if this is not possible, to reduce the impacts of its noncompliance. Ways that impacts may be reduced include protecting the structure or other affected development from flood damages, implementing the enforcement provisions of the ordinance or otherwise deterring future similar violations, or reducing Federal financial exposure with regard to the structure or other development.

REPAIR, REMODELING OR MAINTENANCE Activities which do not result in any increases in the outside dimensions of a building or any changes to the dimensions of a structure.

REPETITIVE LOSS A building covered by a contract for flood insurance that has incurred flood-related damages on 2 occasions during a 10 year period ending on the date of the event for which a second claim is made, in which the cost of repairing the flood damage, on the average, equaled or exceeded 25% of the market value of the building at the time of each such flood event.

RESIDENTIAL STREET Streets serve as the primary transportation network in the community. Generally, they are 2 to 6 blocks in length.

RETENTION FACILITIES A facility designed to completely retain a specified amount of stormwater runoff without release except by means of evaporation, infiltration, or pumping.

RETROFITTING Measures, such as floodproofing, elevation, construction of small levees, and other modifications, taken on an existing building or its yard to protect it from flood damage.

REVENUES All fees, assessments or other income received by the stormwater utility, including, but not limited to, amounts received from the investment or deposit of monies in any fund or account, and all amounts received as gifts or donations, and the proceeds from the sale of bonds to finance the stormwater management program, or any other type of funds derived from grants, charges or loans which by purpose or effect relate to stormwater management activities.

RIPARIAN ENVIRONMENT Vegetated areas within the limits of the regulatory floodplain or floodprone area conveyance path, bordering a waterway that provides habitat or amenities dependent on the proximity to water.

RIVERINE Relating to, formed by, or resembling a river (including tributaries), stream, brook, etc.

ROADSIDE DITCHES Drainage ditches within 25 feet from the edge of the outside travel lane. Section 1316 of the National Flood Insurance Act of 1968 refers to the act that provides that no new flood insurance shall be provided for any property found by the Federal Emergency Management Agency to have been declared by a state or local authority to be in violation of state or local ordinances.

ROOF SIGN A sign which is erected, constructed, placed, or maintained upon and completely over the roof of the building to which it is attached.

RUNWAY A defined area on an airport prepared for landing and takeoff of aircraft along its length.

RUNWAY END Existing physical end of the hard-surfaced runway, having a defined coordinate and elevation.

SECONDARY FACADE A building façade which does not face a street, private drive, parking area,

park or civic space.

SECTION 1316 OF THE NATIONAL FLOOD INSURANCE ACT OF 1968 The act provides that no new flood insurance shall be provided for any property found by the Federal Emergency Management Agency to have been declared by a state or local authority to be in violation of state or local ordinances.

SEDIMENT Solid particulate matter, both mineral and organic, that has been or is being transported by water, air, gravity, or ice from its site of origin.

SEDIMENTATION The process by which sediment resulting from accelerated erosion has been or is being transported off the site of the land-disturbing activity or into a lake or natural watercourse.

SERVICE LINE A distribution line that transports gas from a common source of supply to an individual customer, to residential or small commercial customers, or to multiple residential or small commercial customers served through a meter header or manifold. A service line ends at the outlet of the customer meter or at the connection to a customer's piping, whichever is further downstream, or at the connection to customer piping if there is no meter.

SERVICE STREET A specifically designated street where special rules apply.

SHADE TREE A locally adapted species with an expected mature height of 35 feet or greater and an expected mature crown spread of at least 30 feet or greater.

SHINGLE SIGN A small projecting sign that hangs from a bracket or support and is located over or near a building entrance.

SHOPFRONT BUILDING A single-story building type that typically accommodates ground floor retail uses

SIDEWALK SIGN A moveable sign not secured or attached to the ground or surface upon which it is located.

SILTATION Sediment resulting from accelerated erosion which is settleable or removable by properly designed, constructed, and maintained control measures; and which has been transported from its point of origin within the site of a land-disturbing activity; and which has been deposited, or is in suspension in water.

SINGLE FAMILY RESIDENTIAL PROPERTY Developed property which serves the primary purpose of providing a permanent dwelling unit, regardless of the zoning district in which such property is located, for single-family detached units, and which may or may not have accessory uses related to the purpose of providing permanent dwelling facilities.

SITE Any lot or group of contiguous lots owned or controlled by the same person or entity, assembled for the purpose of a single development.

SITE AREA The area included in the rear, side and front lot lines of the site. Site are does not include existing or proposed right-of-way, whether dedicated or not dedicated to public use.

SITE DEPTH The distance between the front and rear property lines measured along a line midway between the side property lines.

SITE WIDTH The distance between the side lot lines of the site (generally running perpendicular to a street) measured at the primary street property line along a straight line or along the chord of the property line.

SKETCH PLAN A component of a development application that shows in simple line drawing form the proposed layout of streets, lots, buildings, civic spaces and other features in relation to existing conditions based upon the size of the tract proposed for development.

SPECIAL FLOOD HAZARD AREA (SFHA) The land in the floodplain subject to a 1 percent or greater chance of being flooded in any given year as determined in Chapter 8 of this ordinance.

STABLE NATURAL VEGETATION The first place on the oceanfront where plants such as sea oats hold sand in place.

STABILIZATION The process of establishing an enduring soil cover of vegetation and/or mulch or other ground cover and/or combination with installing temporary or permanent structures for the purpose of reducing to a minimum the erosion process and the resultant transport of sediment by wind, water, ice, or gravity.

STACKED FLAT A multi-story building type that accommodates side-by-side attached units where units can be used for both non-residential and residential use. Ground floor units can be separated from upper-story units or units can be internally connected.

START OF CONSTRUCTION The date the building permit was issued, provided the actual start of construction, repair, reconstruction, rehabilitation, addition, or improvement was within 180 days of the permit date. The actual start means the first placement of permanent construction of a structure (including a manufactured home) on a site, such as the pouring of slabs or footings, installation of piles, construction of columns, or any work beyond the stage of excavation or the placement of a manufactured home on a foundation. Permanent construction does not include land preparation, such as clearing, grading, and filling; nor does it include the installation of streets and/or walkways; nor does it include excavation for footings, piers or foundations, or the erection of temporary forms; nor does it include the installation on the property of accessory buildings, such as garages or sheds not occupied as dwelling units or not part of the main structure. For a substantial improvement, the actual start of construction means the first alteration of any wall, ceiling, floor, or other structural part of the building, whether or not that alteration affects the external dimensions of the building.

STATUTE MILE A distance of 5,280 feet.

STOOP A small raised platform that serves as an entrance to a building.

STORMWATER FACILITY See Stormwater drainage, flood control and pollutant reduction in runoff.

STORMWATER MANAGEMENT SYSTEM All ditches, channels, conduits, bridges, culverts, levees, ponds, natural and manmade impoundments, wetlands, wetland buffers, riparian environment, tile, swales, sewers, BMPs or other natural or artificial structures or measures which serve as a means of draining surface and subsurface water from land.

STORMWATER PERMIT A permit established by this article and issued through the County prior to the approval of a building permit signifying conformance with provisions of this article.

STORMWATER POLLUTION PREVENTION PLAN A document which describes the best management practices (BMPs) and activities to be implemented by a person or business to identify sources of pollution or contamination at a site and the actions to eliminate or reduce pollutant discharges to stormwater, stormwater conveyance systems, and/or receiving waters to the maximum extent practicable.

STORMWATER RUNOFF The portion of a precipitation on the land which reaches the drainage system.

STORMWATER UTILITY SERVICE FEE The monthly monetary amount charged each parcel of real property for the services provided by the stormwater utility system and program as set forth in the County schedule of rates and fees, a copy of which is located in the office of the County Clerk and is incorporated by reference herein.

STREAM A perennial or intermittent stream shall be deemed present if the feature is shown on either the most recent version of the soil survey map prepared by the Natural Resources Conservation Service of the United States Department of Agriculture (USDA) or the most recent complete version of the 1:24,000 scale (7.5 minute) quadrangle topographic maps prepared by the United States Geologic Survey (USGS).

STREAM CHANNEL Any river, stream, creek, brook, or branch in or into which surface or groundwater flows, either perennially or intermittently.

STRUCTURE A walled and roofed building that houses a principal use. This also includes any manmade object above ground including, but not limited to, buildings, towers, smokestacks, gas or liquid storage tanks, and overhead transmission lines.

SUBDIVIDER Any individual, firm, association, syndicate, co-partnership, corporation, trust or any other legal entity proceeding under to subdivide land hereunder for himself or for another.

SUBDIVISION All divisions of a tract or parcel of land into 2 or more lots, building sites, or other divisions when any 1 or more of those divisions is created for the purpose of sale or building development (whether immediate or future) and shall include all divisions of land involving the dedication of a new street or a change in existing streets.

SUBDIVISION, MAJOR Subdivisions that include new streets, extensions of streets; requests for variances, dedication of public utilities or streets,

include 11 or more acres or subdivide land into 6 or more lots, and result in an increase in the number of lots/parcels included in subdivision previously approved by Lancaster County.

SUBDIVISION, MINOR Subdivisions that do not include new streets, extensions of streets (except for improving or widening existing streets), requests for variances (except those for curb and gutter requirements), dedication of public utilities or streets, include 10 or fewer acres or subdivide land into 5 or fewer lots, and do not result in an increase in the number of lots/parcels included in subdivision previously approved by Lancaster County.

SUBSIDIARY An affiliate that is directly, or indirectly through one or more intermediaries, controlled by another person.

SUBSTANTIAL DAMAGE Damage of any origin sustained by a structure whereby the cost of restoring the structure to it's before damaged condition would equal or exceed 50 percent of the market value of the structure before the damage occurred. Such repairs may be undertaken successively and their costs counted cumulatively. Please refer to the definition of "substantial improvement".

SUBSTANTIAL IMPROVEMENT Any repair, reconstruction, rehabilitation, addition, or other improvement of a structure, the cost of which equals or exceeds 50 percent of the market value of the structure before the start of construction of the improvement. This term includes structures that have incurred repetitive loss or substantial damage, regardless of the actual repair work performed.

The term does not, however, include either:

1) Any project of improvement to a structure to correct existing violations of State or local health, sanitary, or safety code specifications which have been identified by the local code enforcement official and which are the minimum necessary to assure safe living conditions or,

2) Any alteration of a historic structure, provided that the alteration will not preclude the structure's continued designation as a historic structure.

Permits shall be cumulative for a period of 5 years. If the improvement project is conducted in phases, the total of all costs associated with each phase, beginning with the issuance of the first permit, shall be utilized to determine whether "substantial improvement" will occur.

SUBSTANTIALLY IMPROVED EXISTING MANUFACTURED HOME PARK OR SUBDIVISION Where the repair, reconstruction, rehabilitation, or improvement of the streets, utilities, and pads equals or exceeds 50 percent of the value of the streets, utilities, and pads before the repair, reconstruction, or improvement commenced.

SUPPORT STRUCTURE Includes communication towers, buildings, and any other structures used to support 1 or more antennas.

SWALE A vegetated channel, ditch, or low-lying or depressional tract of land that is periodically inundated by conveying stormwater from one point to another.

TECHNICAL REVIEW COMMITTEE (TRC) A staff committee established to provide technical advice on sketch plans, preliminary plats, and final plats.

TEMPORARY SIGN A sign that is used in connection with a circumstance, situation, or event that has a definite beginning and end date/time. This definition does not include changeable signs.

TEN-YEAR STORM The stormwater runoff resulting from precipitation of an intensity expected to be equaled or exceeded, on the average, once in 10 years, and of a duration which will produce the maximum peak rate of runoff for the watershed of interest under average antecedent wetness conditions.

TOWER (COMMUNICATIONS) A structure greater than 60 feet in height whose primary purpose is to support communications equipment. This definition includes tower/antenna combinations (NOT tower/antenna/building combinations) and the height measurement applies to those combinations. The foregoing notwithstanding, this definition shall not include wire-supporting electric power transmission and telephone poles.

TOWER, LATTICE A guyed or self-supporting multi-sided, open, steel frame structure used to support communications equipment.

TOWER, MONOPOLE A structure composed of a single spire used to support communications equipment.

TOWNHOUSE A building type that accommodates 3 or more dwelling units where each unit is separated vertically by a common side wall. Units cannot be vertically mixed.

TOWNHOUSE DEVELOPMENT A townhouse development is a development consisting of 2 or more townhouses with each townhouse on its own lot separated by property lines and constructed within a building group of townhouses with their accompanying common areas, courtyards, and accessory buildings as authorized by the condominium or townhouse development regulations of the Lancaster County Unified Development Ordinance.

TOXIC OR HAZARDOUS MATERIALS Any substance or combination of substances, which upon exposure to any organism, either directly from the environment or indirectly by ingestion through food chains, has the potential to cause death, disease, behavioral abnormalities, cancer, genetic mutations, physiological malfunctions, physical deformities, or other adverse health effects in such organisms or their offspring.

TRAFFIC AISLE A driveway for traffic along parking spaces.

TRAFFIC CHANNEL A driveway for traffic movement within a parking lot other than landscape islands.

TRAFFIC ISLAND Any peninsula, protrusion, or area within or along parking lots that channel traffic or separate entrance drives from parking spaces. A traffic island is not necessarily a complete "island" surrounded by other installations or constructions.

TRANSITION SECTION The reaches of the stream or regulatory floodway where water flows from a narrow cross-section to a wide cross-section or vice-versa.

TRANSMISSION PIPELINES Include, but not limited to, pipelines designed for the transmission of a "Gas", or "Petroleum Gas", except a "Service Line" or "Main", as those terms are defined by Title 49, Code of Federal Regulations, Section 192.3; also includes pipelines designed for the transmission of a "Hazardous Liquid", "Petroleum Product", "Highly Volatile Liquid", as defined by Title 49, Section 195.2.

TRANSPARENCY The total area of window and door opening filled with glass expressed as a percentage of the total facade area by story.

TWENTY-FIVE YEAR STORM The stormwater runoff resulting from precipitation of an intensity expected to be equaled or exceeded on the average, once in 25 years, and of a duration which will produce the maximum peak rate of runoff for the watershed of interest under average antecedent wetness conditions.

UDO Lancaster County Unified Development Ordinance.

UNCOVERED The removal of ground cover from, on, or above the soil surface.

UNDERSTORY TREE A locally adapted species with an expected mature height of at least 15 feet and an expected mature crown spread of at least 15 feet.

UNDEVELOPED COMMERCIAL/INDUSTRIAL PROPERTY Undeveloped property located within a zoning district in which multifamily, industrial, service or commercial uses are included as permitted uses.

UNDEVELOPED RESIDENTIAL PROPERTY Undeveloped property located in a district zoned primarily for detached single-family dwelling units, but not included as permitted uses industrial, service and commercial uses.

UPPER STORY Any story above the ground story or floor.

USE The principal activity or function that actually takes place or is intended to take place on a parcel.

VARIANCE A grant of permission that authorizes a person, owing to conditions particular to the property, in which a literal enforcement of the UDO would result in unnecessary and undue hardship.

VELOCITY The average velocity of flow through the cross section of the main channel at the peak flow of the storm of interest. The cross section of the main channel shall be that area defined by the geometry of the channel plus the area of flow below the flood height defined by vertical lines at the main channel.

VIOLATION The failure of a structure or other development to be fully compliant with these regulations.

WALL SIGN A sign fastened to or painted on the wall of a building in such a manner that the wall becomes the supporting structure for or forms the background surface of the sign and which does not

project more than one foot from the building or structure.

WASTE Surplus materials resulting from on-site land-disturbing activities and being disposed of at other locations.

WATER DEPENDENT Structures or facilities relating to the use of, or requiring access to, the water or shoreline. Examples of water-dependent uses include, but are not limited to, pumping facilities, wastewater treatment facilities, facilities and improvements related to recreation boating or commercial shipping.

WATER SURFACE ELEVATION (WSE) The height, in relation to mean sea level, of floods of various magnitudes and frequencies in the floodplains of riverine or lacustrine areas

WATERCOURSE A lake, river, creek, stream, wash, channel or other topographic feature on or over which waters flow at least periodically. Watercourse includes specifically designated areas in which substantial flood damage may occur.

WATERSHED The land area above a given point on a channel that contributes stormwater to that point.

WATERSHED BENEFIT A decrease in flood damages to structures or an improvement in water quality upstream or downstream of the development site created by installation of the stormwater management system. The benefit must be beyond the benefit provided by meeting the minimum stormwater ordinance standards and stormwater technical reference manual guidance.

WATERS OF THE STATE The South Carolina Pollution Control Act defines waters of the state as: lakes, bays, sounds, ponds, impounding reservoirs, springs, wells, rivers, streams, creeks, estuaries, marshes, inlets, canals, the Atlantic Ocean within the territorial limits of the state and all other bodies of surface or underground water, natural or artificial, public or private, inland or coastal, fresh or salt, which are wholly or partially within or bordering the state or within its jurisdiction. The definition includes, but is not limited to:

1) All waters such as lakes, rivers, streams (including intermittent streams), mudflats, wetlands, sloughs, wet meadows, or natural ponds.
2) All impoundments of waters not otherwise defined as waters of the state under the definition.
3) Tributaries of waters identified above.
4) Wetlands adjacent to waters identified above.

For clarification, Waste Treatment Systems, including treatment ponds or lagoons designed to meet the requirements of the Clean Water Act (other than cooling ponds as defined in 40 CFR 123.11(m) which also meet the criteria of this definition) are not waters of the state. It should also be noted that the following waters are generally not considered to be waters of the state:

1) Drainage and irrigation ditches excavated on dry land.
2) Artificially irrigated areas that would revert to upland if the irrigation ceased.
3) Artificial lakes created by excavating and/or diking dry land to collect and retain water and which are used exclusively for such purposes as stormwater storage, stock watering, irrigation, or settling basins.
4) Artificial reflecting or swimming pools or other small ornamental bodies of water created by excavating and/or diking dry land to retain water for primarily aesthetic reasons.
5) Water-filled depressions created in dry land incidental to construction activity and pits excavated in dry land for the purpose of obtaining fill, sand, or gravel unless and until the construction or excavation operation is abandoned and the resulting body of water meets the definition of waters of the state.

WATERS OF THE UNITED STATES Those water bodies and wetland areas that are under the U.S. Army Corps of Engineers' jurisdiction.

WET DETENTION FACILITY A wet detention facility designed to maintain a permanent pool of water at least three feet in depth after the temporary storage of stormwater runoff.

WETLAND Lands that are inundated or saturated by surface or groundwater at a frequency and duration sufficient to support, under normal conditions, a prevalence of vegetation adapted for life in saturated soil conditions (known as hydrophytic vegetation). A wetland is identified based upon the three attributes:

1) Hydrology;
2) Soils; and
3) Vegetation as mandated by the current federal

4) wetland determination methodology.

WETLAND IMPACT Waters of the U.S. or state that are disturbed or otherwise adversely affected by flooding, filling, excavation, or drainage which results from implementation of a development activity.

WINDOW SIGN A sign affixed to the inside of a window or door or a sign placed within a building so as to plainly visible and legible through a window or door.

WORKING DAYS Days exclusive of Saturday and Sunday during which weather conditions or soil conditions permit land-disturbing activity to be undertaken.

APPENDIX A - LEGACY PLANNED DEVELOPMENT DISTRICTS

District No.	District Name	PDD Ordinance No.	Development Agreement Ordinance No.
2	Bear Creek Landing / Edgewater	#322, #348, #356	#961
5	Bailes Ridge	#458, #491	Not Applicable
8	Walnut Creek / Edenmoor	#504, #710, #772	#732
9	Food Lion / Cobblestone	#514, #574	Not Applicable
11	Bridgemill	#537, #778	#776
13	Hanover Crossing	#592, #896	Not Applicable
16	Reid Pointe	#629,#1224	Not Applicable
18	Sun City Carolina Lakes	#631, #644, #660, #687, #691,#1389	#685, #864
20	Wallace Tract	#645, #659, #688, #878, #798	#814
21	Cambridge / Ansley Park	#650, #796	2015--1378*
23	Rosemont	#725	Not Applicable
26	U.S. Trust / Collins Road	#1346	#960, #1150
27	Avondale	#2015-1386, #2015-1369	#2015-1370

Source: Lancaster County, 2016

Note: Additional ordinances may be applicable

* Applies to a portion of PDD 21

Appendix B

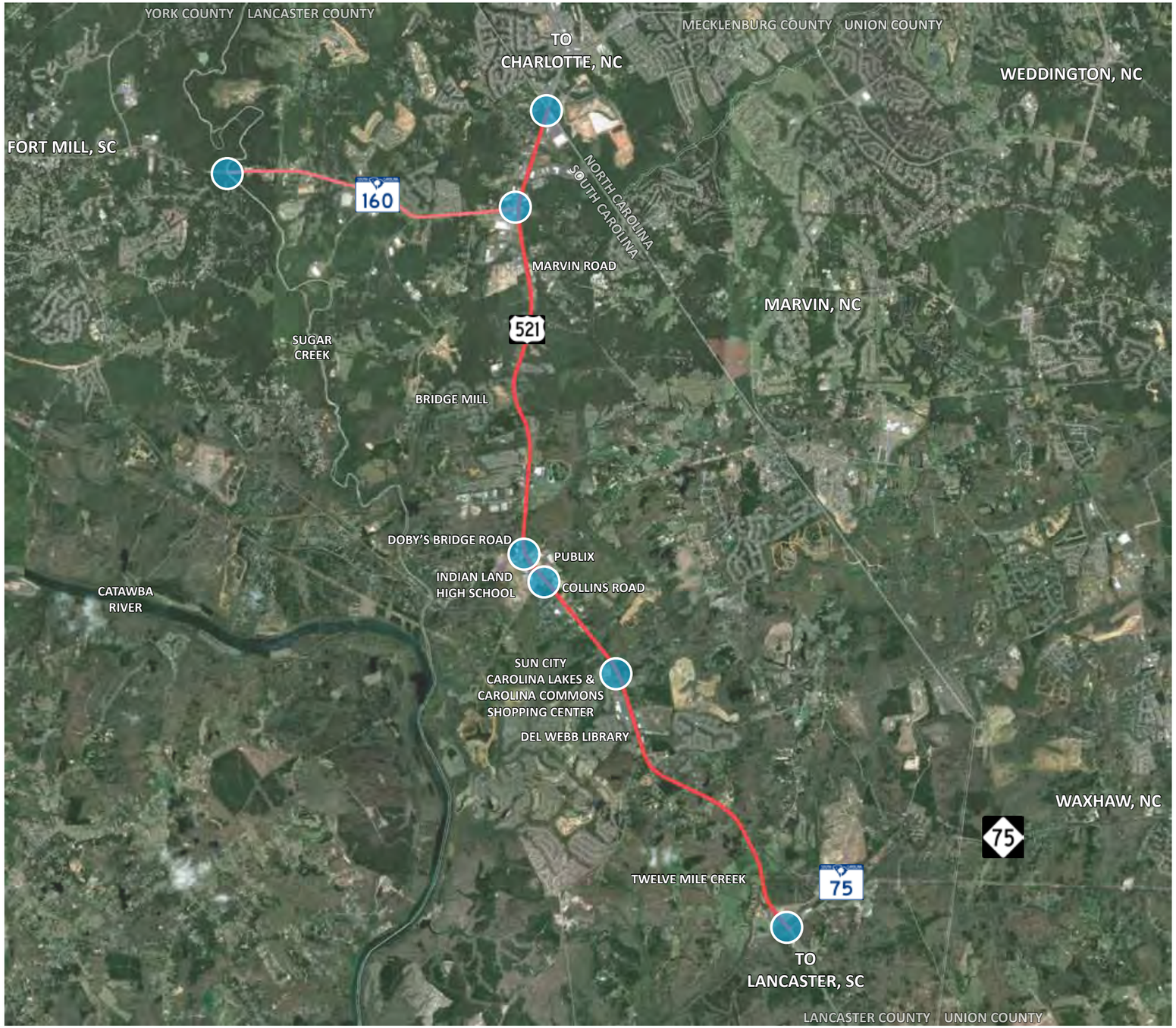

Corridor Overlay

The **Highway Corridor Overlay District** is proposed along US Highway 521 from SC Highway 75 (Waxhaw Highway) northward to the North/South Carolina state line, and along SC Highway 160 from US Highway 521 westward to the Lancaster/York county line.

521 US HIGHWAY/ROUTE 521 CORRIDOR: APPROXIMATELY 8.4 MILES

160 SC 160 CORRIDOR: APPROXIMATELY 2.7 MILES

SIGNIFICANT INTERSECTIONS/NODES

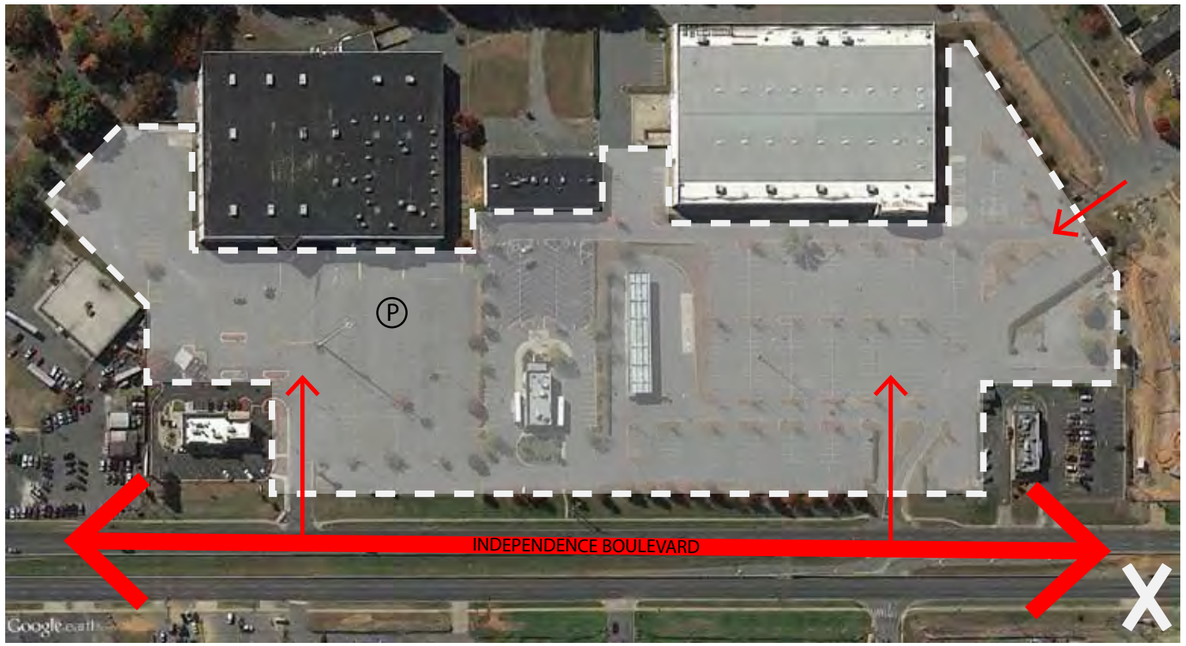

RETAIL, CHARLOTTE, NC

MIXED USE, HUNTERSVILLE, NC

GAS STATION, CHARLOTTE, NC

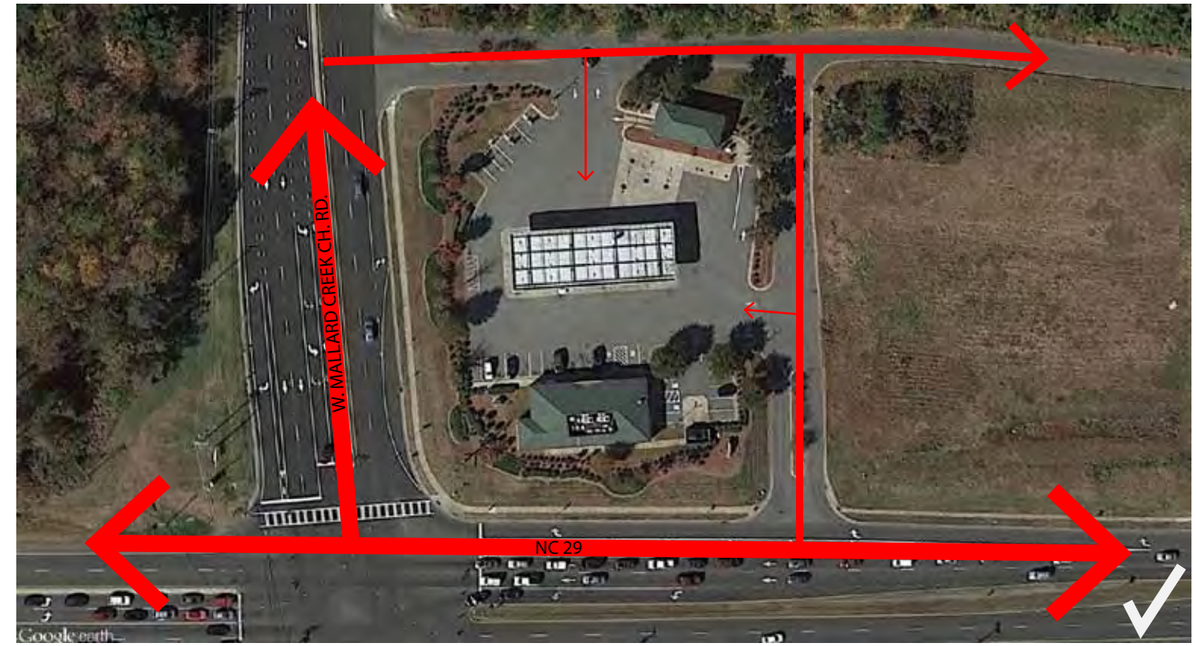

GAS STATION, CHARLOTTE, NC

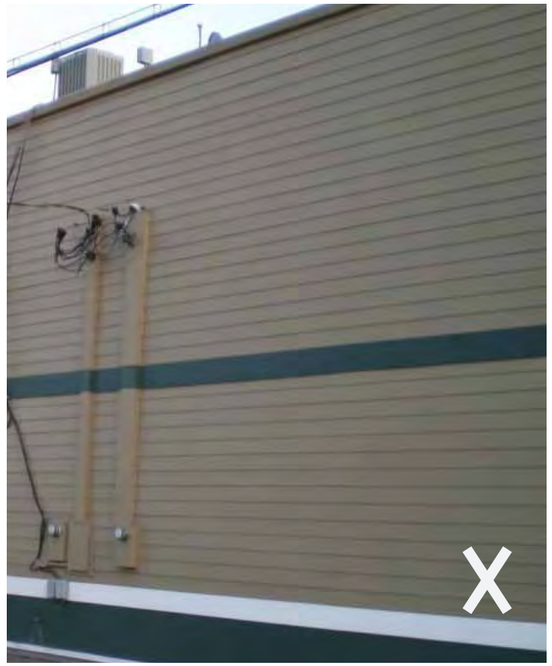

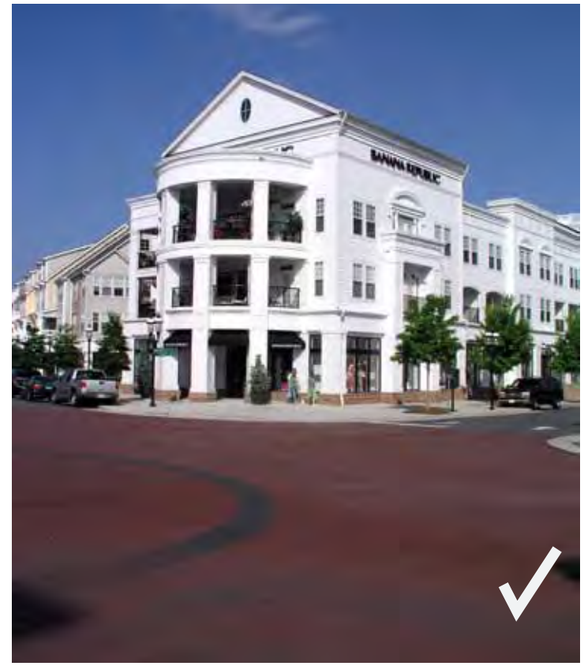

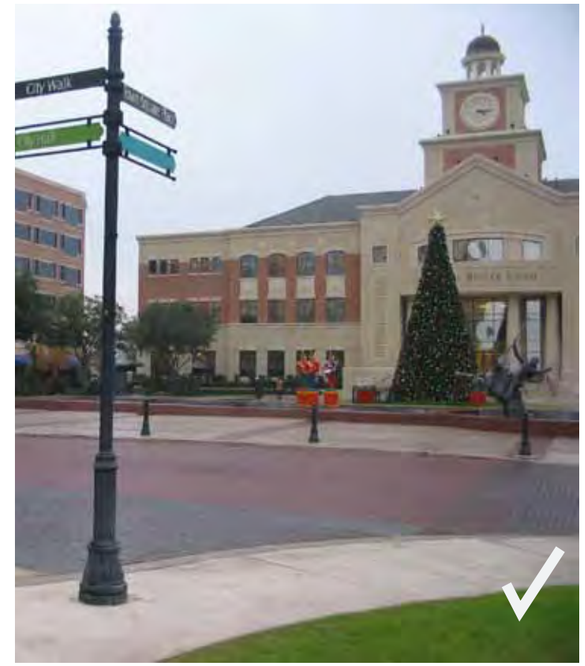

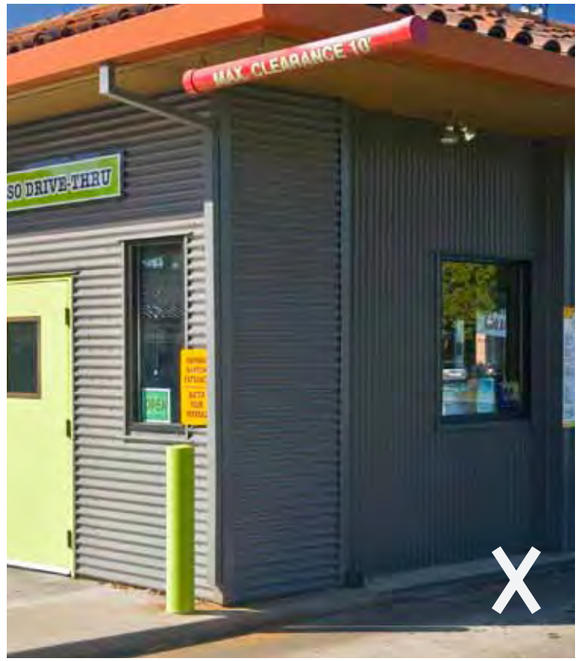
MAX CLEARANCE 10'
SO DRIVE-THRU

PARKING

COPLON'S

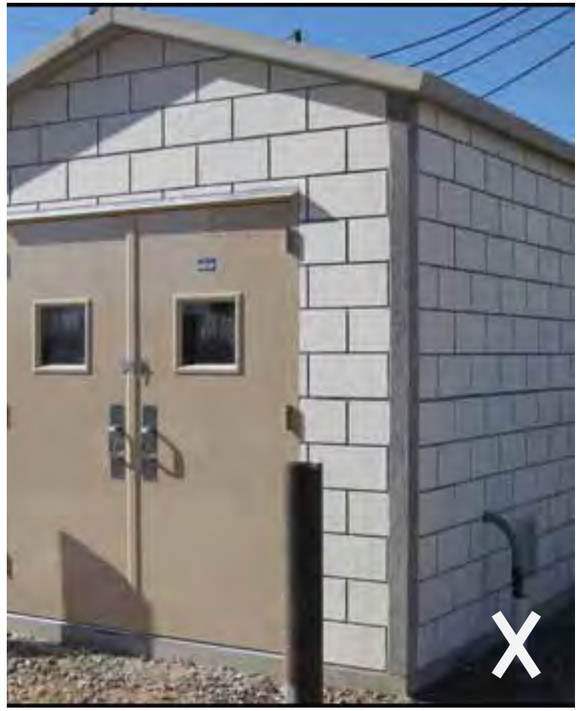

16920

BIRKDALE VILLAGE

STARBUCKS
COFFEE

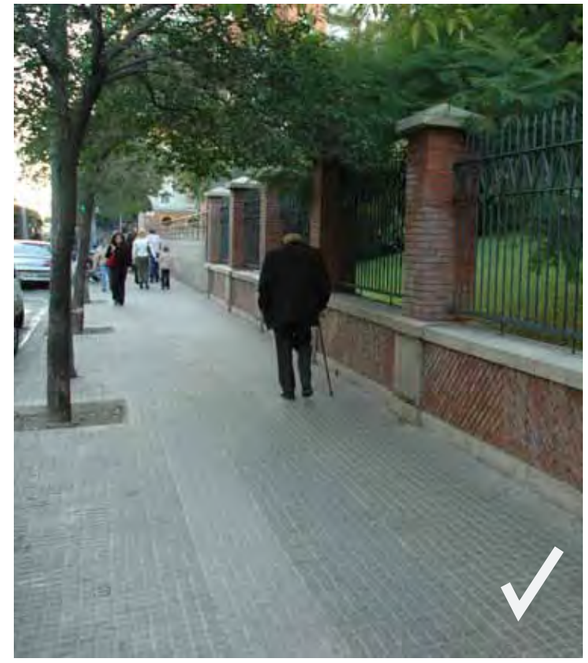

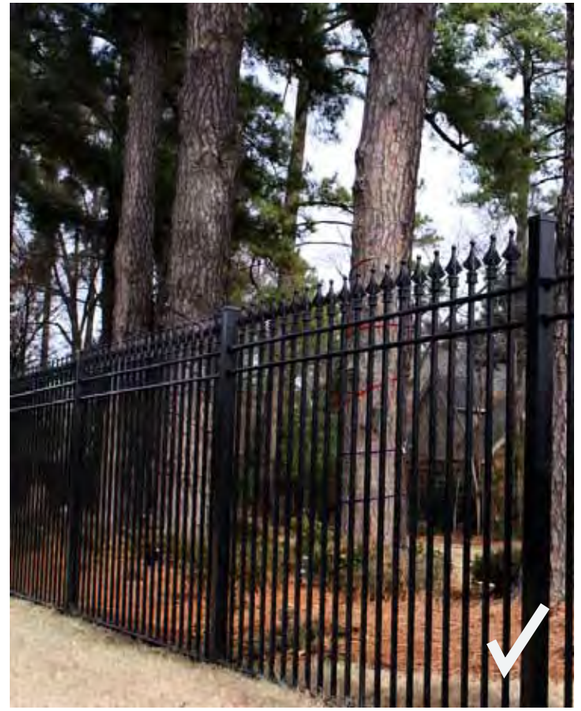

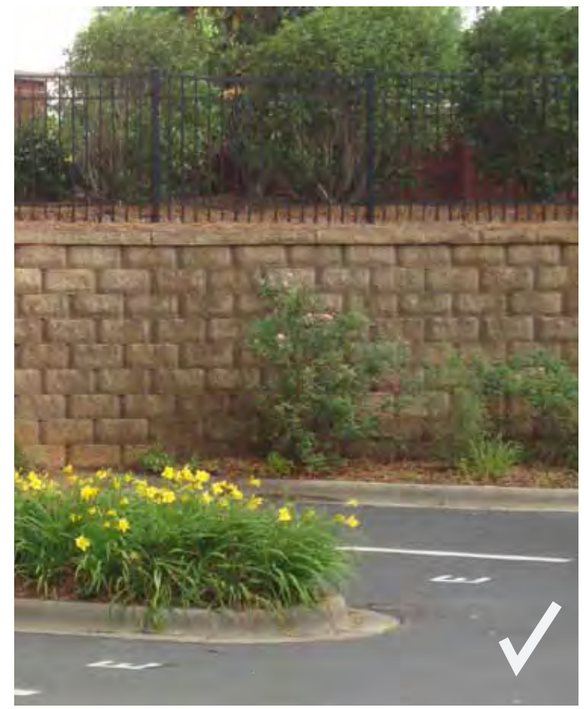

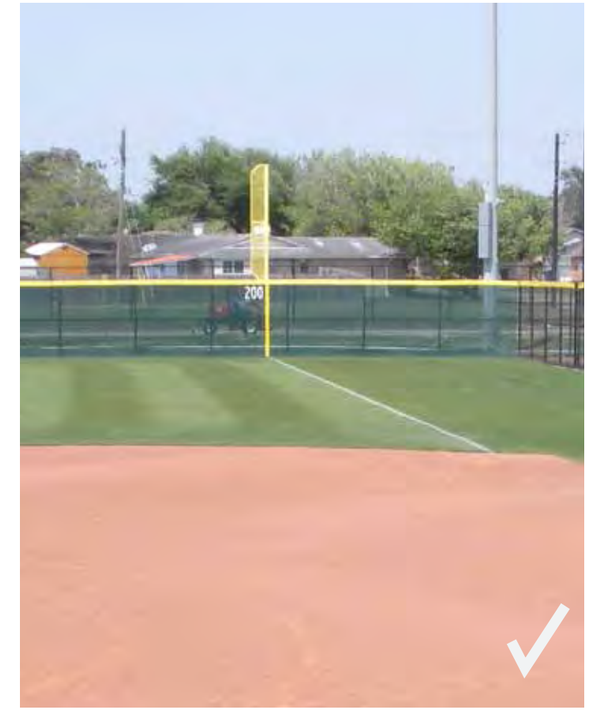

Note: A Corridor Frontage Buffer shall be established as a public easement within the first 25 feet of front yardas measured from the edge of the road right-of-way. Three canopy trees shall be placed per every 100 feet of corridor frontage, and in addition, the Corridor Frontage Buffer shall consist of shrubs, turfgrass, and/or groundcover

LOFT

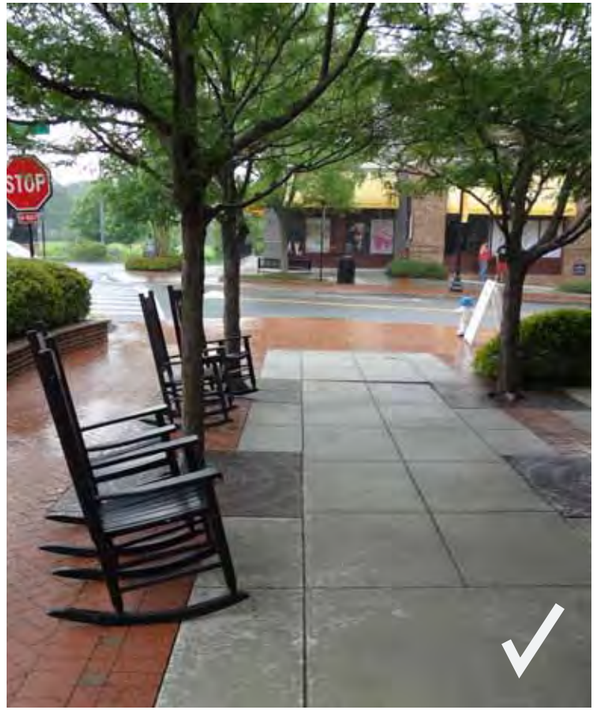
STOP

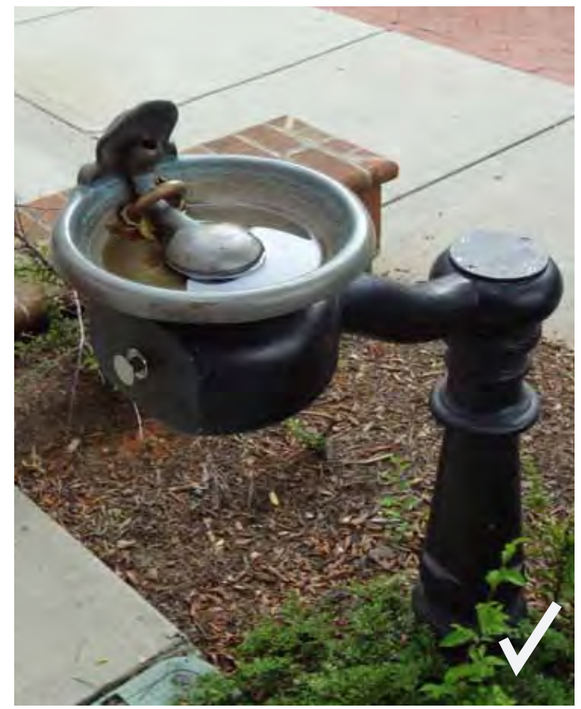

RODES
PRINTING
SPEED SERVICE
Cash
JOYERIA
PAY DAY
DOLLAR STORE
DISCOUNT CIGARETTES
BEER
SODAS
MILK
JUICES
BREAD
SNACKS
PREPAID PHONE CARDS
BEAUTY & HAIR ACCESSORIES
RODES INSTANT PRINTING

RICKY BOBBY
Sports Saloon
RESTAURANT
Crawfish Sundays
$8.95 a Pound with Corn and Potatoes

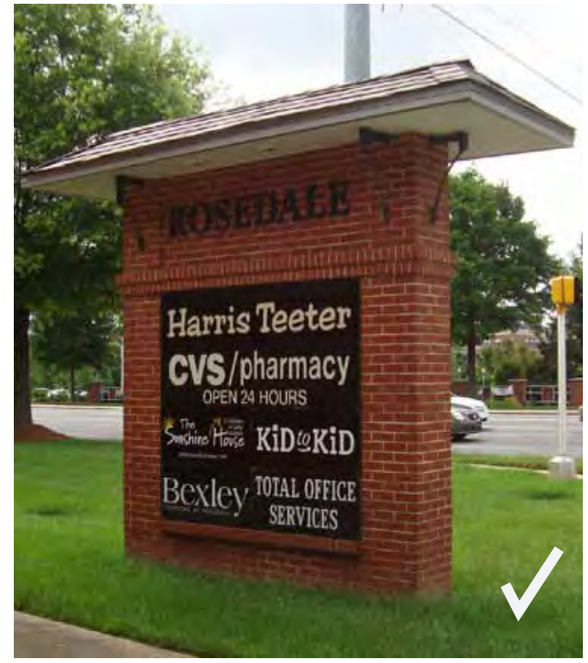
ROSEDALE
Harris Teeter
CVS/pharmacy
OPEN 24 HOURS
KiD to KiD
Bexley
TOTAL OFFICE SERVICES

bp
regular
diesel

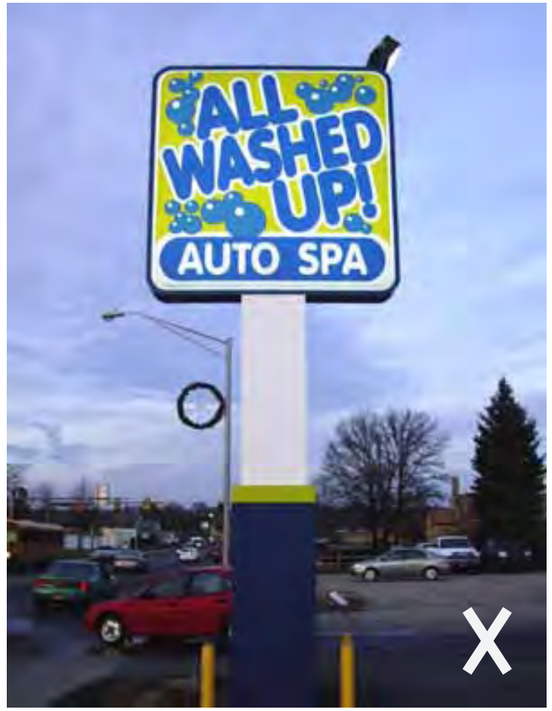
ALL WASHED UP!
AUTO SPA

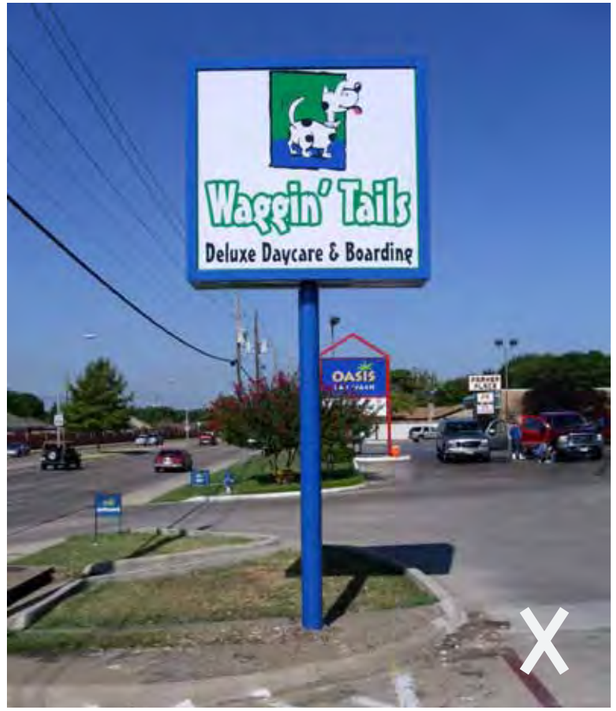
Waggin' Tails
Deluxe Daycare & Boarding
OASIS

BAXTER TOWN CENTER
PIEDMONT URGENT CARE & IMAGING CENTER
Starbucks
Above Board Games
Akahana Asian Bistro
Allen Tate Realtors
Baxter Cleaners
Baxter Jewelers
Baxter Nails & Spa
Beef O' Brady's
Damp Maternity
Champion Taekwondo
Chocolat Boutique
Cloud Nine Martinis/Tapas
Coco Pilates
Cupcatized Cakery
Field of Dreams Education
Fish Market Bar & Grill
Fratelli Italian
Grapevine Wine Bar/Shop
Keller Williams Realty
McAllister's Deli
Miller Street Dance
Monkeyy & Mermaids, Inc.
New Point Learning
OM Yoga
Page 6 Boutique
Playroom Music Academy
RE/MAX Executive
Salons & Spas
Six Pence Pub
State Farm Insurance
TCBY
YMCA
For Leasing - Kerri Roberts (803) 548-8645 Ext. 222

THE WINE SHOP & BISTRO
CITY TAVERN
OMEGA SPORTS
FUJI JAPANESE STEAKHOUSE
CITY CHIROPRACTIC
SPORT CLIPS
FUEL PIZZA

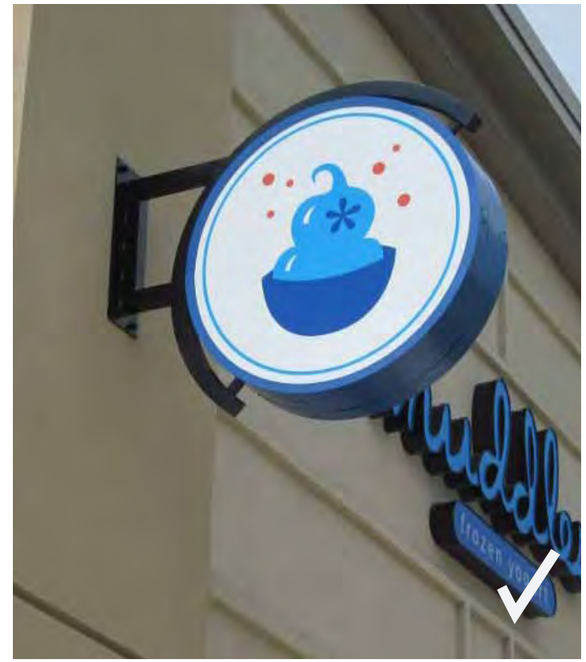

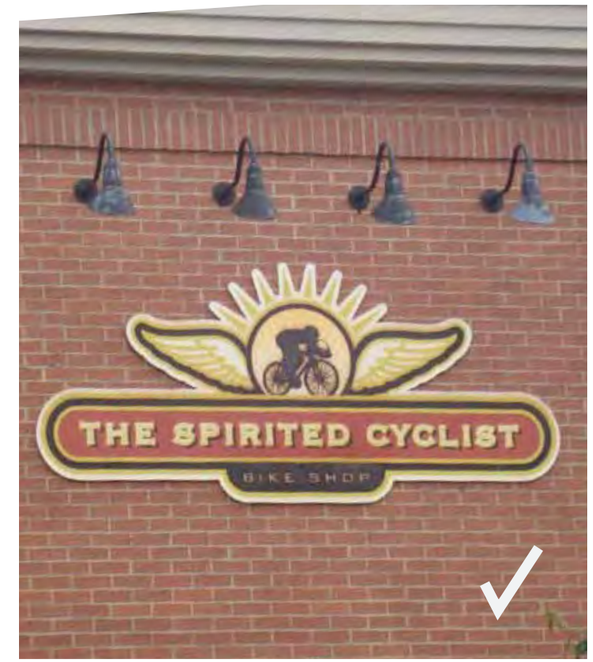

Note: Signs using LED illumination and/or displays are permissable provided they are not attached to a building and the copy or image being displayed remains static or changes no more than once every twenty (20) seconds

STOP
OVER PAYING

MAESTRO
T·R·A·V·E·L
13020

FOR SALE
ZERO DOWN
704 878 8008

Rosedale Medical Center
14330
Novant Health Lakeside
Family Physicians
Novant Health Huntersville
Obstetrics & Gynecology
Novant Health Lakeside
Physical Therapy & Sports Medicine

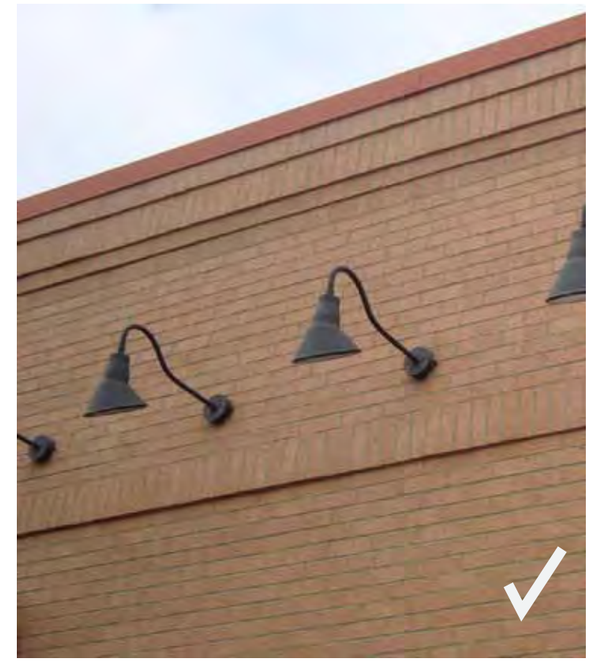

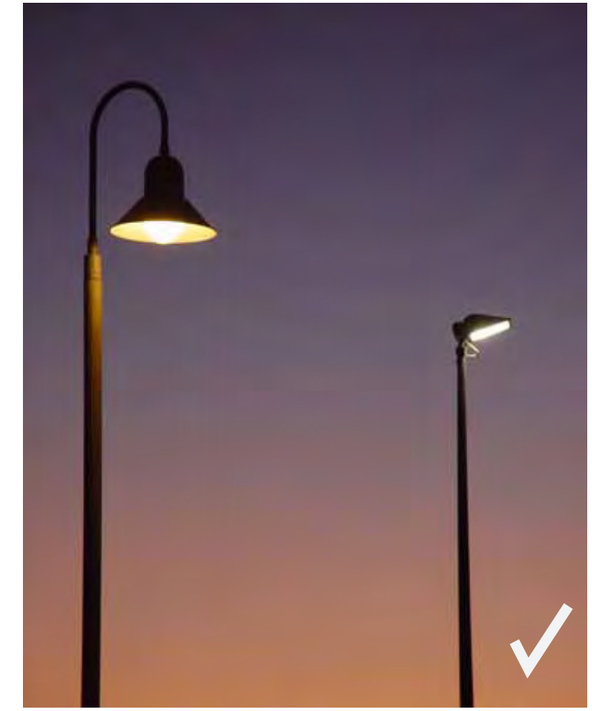

Note: At a new signalized intersection, the standard metal or concrete poles as set forth by SCDOT shall be installed. All poles shall be professionally painted black. Wood poles are only permissible for temporary use during repairs and installation.

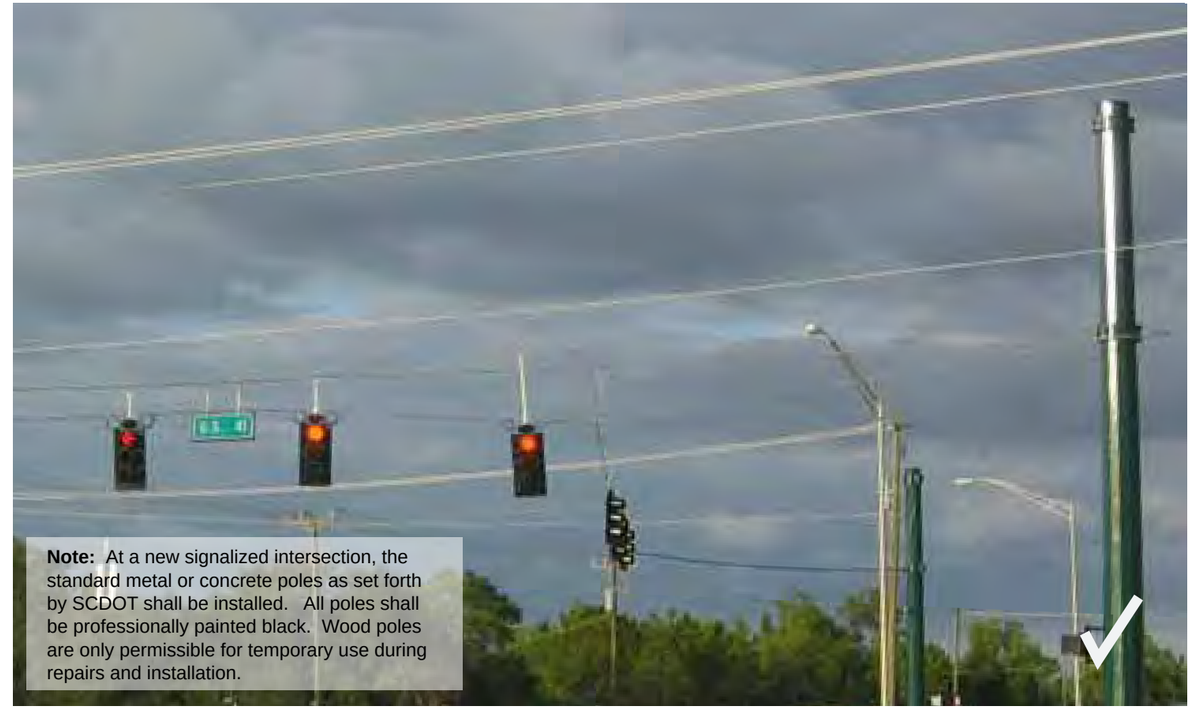

Note: At a new signalized intersection, the standard metal or concrete poles as set forth by SCDOT shall be installed. All poles shall be professionally painted black. Wood poles are only permissible for temporary use during repairs and installation.

CLOSED
CLEARANCE 8' 10"
CLOSED
CLEARANCE 8' 10"

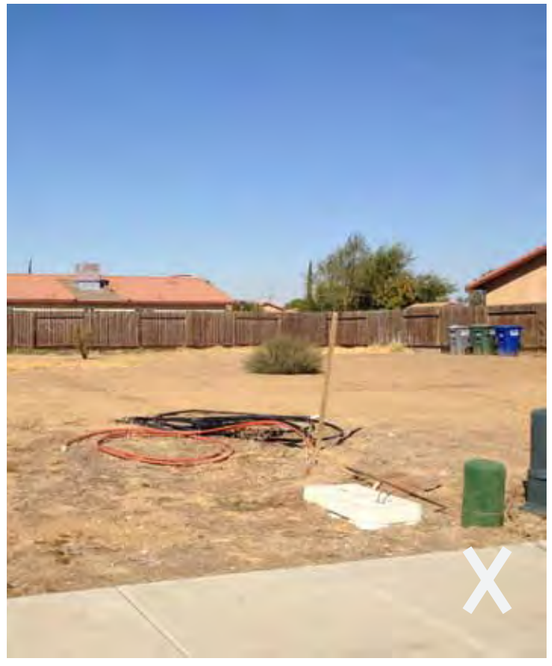

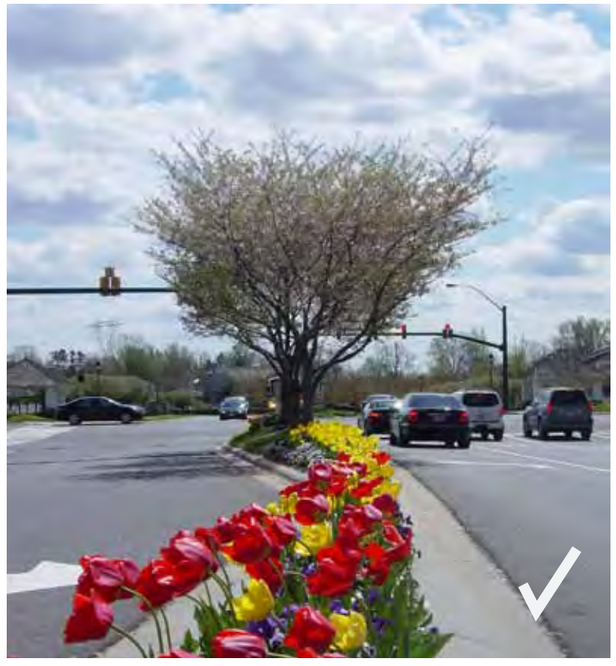

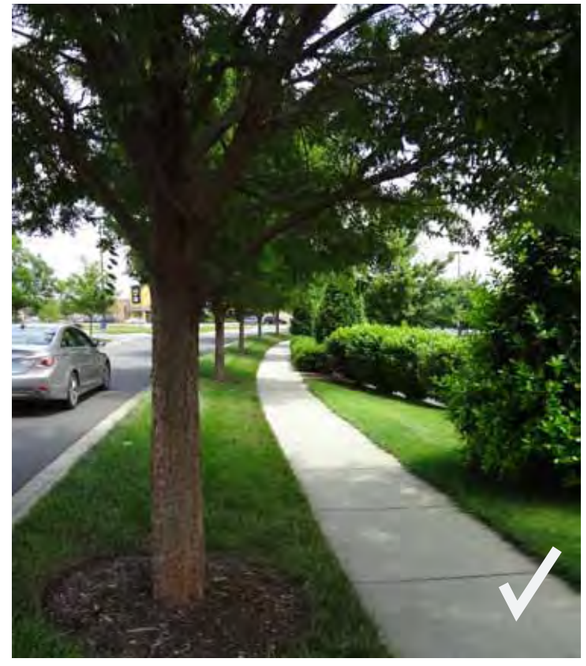

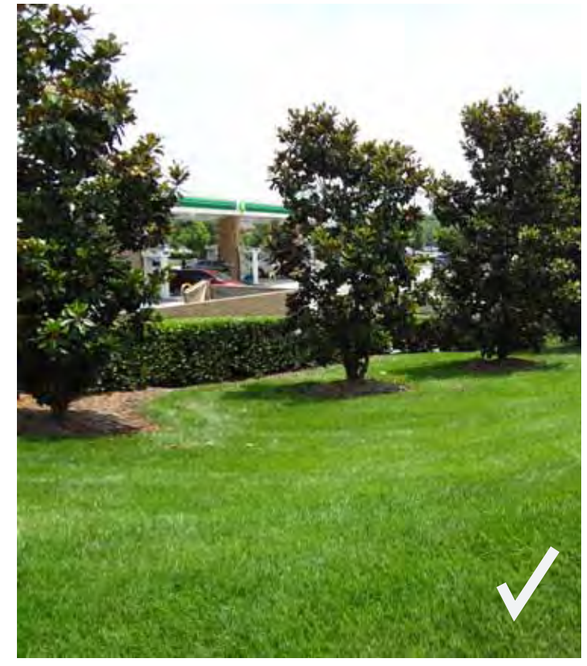

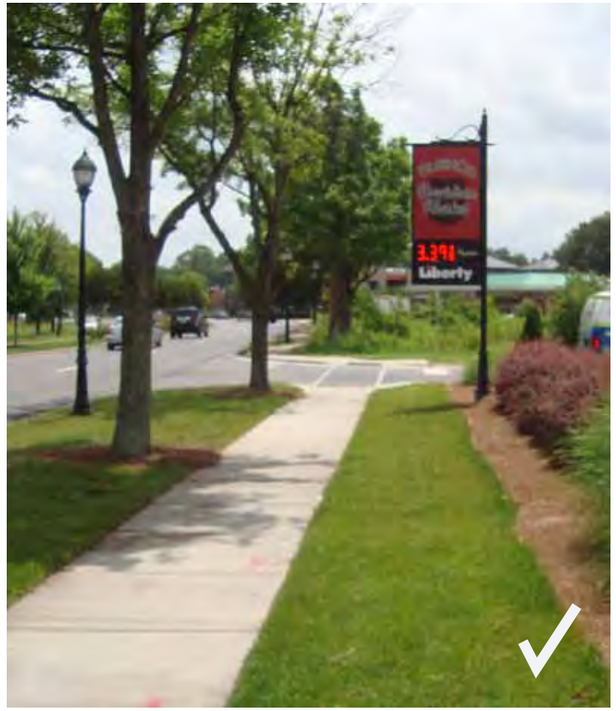

HIGHWAY CORRIDOR OVERLAY DISTRICT

LANCASTER COUNTY, SOUTH CAROLINA

SUPPELEMENTARY DIAGRAMS

LANDSCAPING - MEDIAN AND RIGHT-OF-WAYS

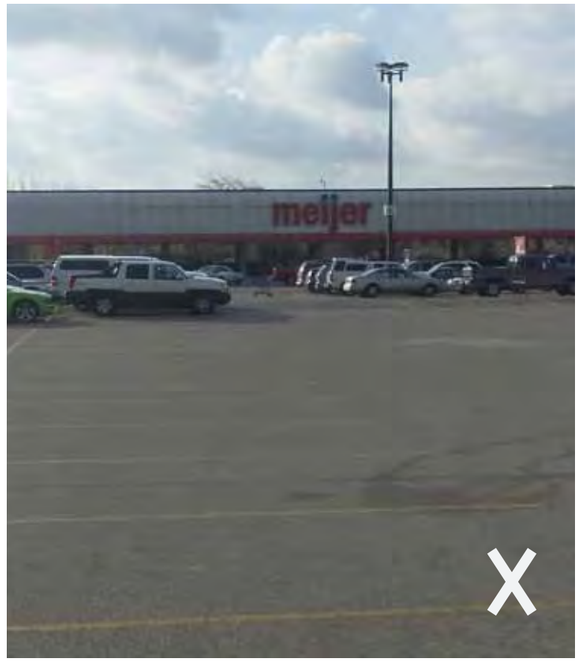
meijer

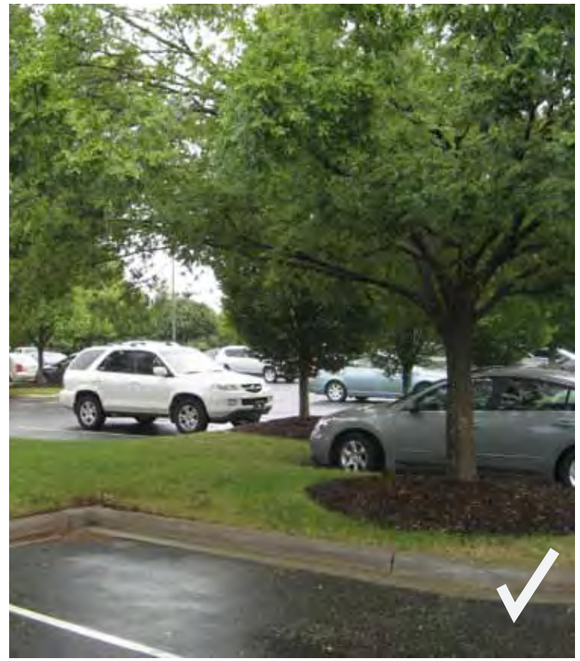

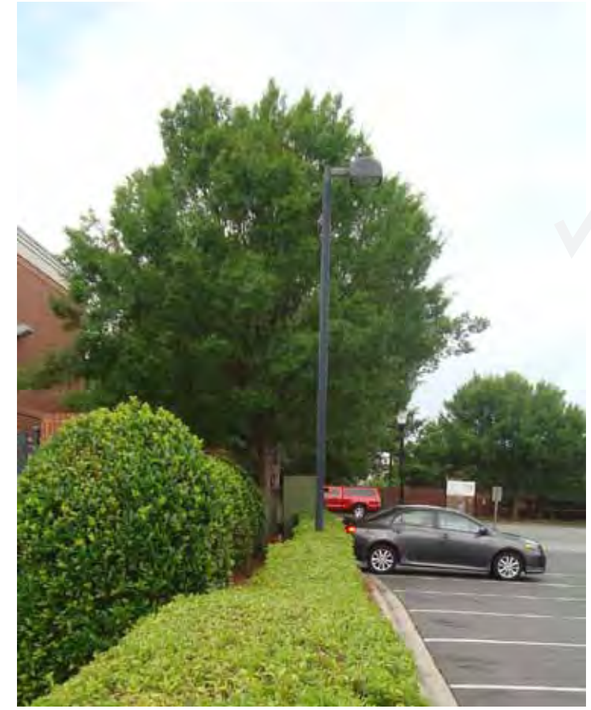

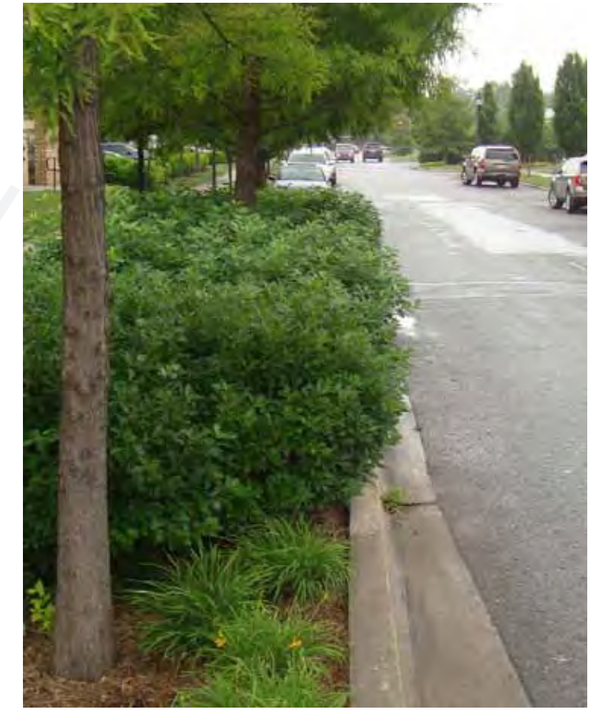

HIGHWAY CORRIDOR OVERLAY DISTRICT

LANCASTER COUNTY, SOUTH CAROLINA

SUPPELEMENTARY DIAGRAMS

INDUSTRIAL DISTRICTS - BULIDING MATERIALS AND VERNACULAR

HWY 521 Typical Section . NTS

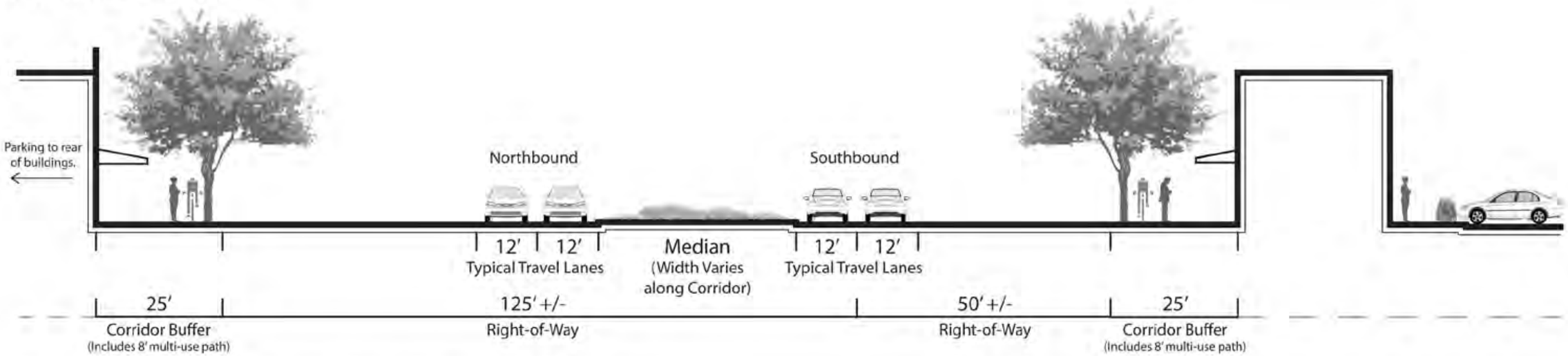

Illustration 1.1, Typical cross section along Highway Corridor Overlay District.

APPENDIX C

LANCASTER COUNTY

MANUAL OF SPECIFICATION AND STANDARD DETAILS

November 28, 2016

Table of Contents

Section 1 – Standard Specifications

Section 2 –Roadway Details

Local Street (Urban) R1

Local Street (Rural) R2

Collector (Urban) R3

Collector (Rural) R4

Standard Collector (Bike Lanes) R5

Commercial/Arterial (Urban) R6

Commercial/Arterial (Rural) R7

Alley R8

Standard Concrete Curb & Gutter R9

Curb End Taper R10

Residential Cul-de-sac Dimensions R11

Cluster Box Unit (CBU) Mailbox – Type I R12

Cluster Box Unit (CBU) Mailbox – Type II R13

Standard Driveway Apron R14

Standard Concrete Multi-use Path R15

Standard Concrete Sidewalk R16

Standard Utility Locations in Street R17

Open Cut Repair for Roadways R18

Trail Details R19

Parking Standards R20

Section 3 – Storm Water Details

Minimum Drainage Easement Requirements SD1

Trench Detail for Storm Drain Pipes SD2

Structure Steps SD3

Standard Concrete Block or Brick Catch Basin SD4

Standard Precast Concrete Catch Basin SD5

Brick Double Catch Basin SD6

Type 1 Catch Basin Grate Types SD7

Type 1 Catch Basin Hood & Grate SD8

Type 9 Catch Basin SD9

Standard Brick Drop Inlet SD10

Standard Precast Drop Inlet SD11

Frame & Grate for Drop Inlets SD12

Standard Precast Concrete Junction Box SD13

Standard Brick Junction Box SD14

Ring and Cover for Storm Systems SD15

Flared End Section SD16

Beveled End Section SD17

LANCASTER COUNTY

STANDARD SPECIFICATIONS

SECTION 1

November 28, 2016

SECTION 01000- TECHNICAL SPECIFICATIONS

Unless otherwise indicated in the construction plans and MSSD, all work elements associated with improvements in Lancaster County shall be constructed in accordance with the South Carolina Department of Transportation's "Specifications For Highway Construction, Latest Edition", Standard Drawings for Road Construction, including the Supplemental Specifications, and the Special Provisions, as applicable. Unless otherwise indicated within the construction documents and MSSD, all bid items will be measured and paid in accordance with the South Carolina Department of Transportation's "Specifications For Highway Construction, Latest Edition", Standard Drawings for Road Construction, including the Supplemental Specifications, and the Special Provisions, as applicable. All references to testing pertaining to quality control to be conducted by "The Research and Materials Laboratory" shall be considered the responsibility of the developer at his own expense.

Delete Paragraph 101.3.27 (the) Engineer, of the 2007 Version of the Standard Specifications for Highway Construction in its entirety and replace with the following:

Lancaster County, acting directly or through his duly authorized representative, such representative acting within the scope of particular assigned duties or authority. ***Lancaster County*** *shall function as the Engineer's duly authorized representative with authority as described in Section 105, "CONTROL OF WORK" of the Standard Specifications for Highway Construction, latest Edition.*

In the specifications where the terms "SCDOT" or "Department" or other like terms are used to describe the facility Owner, it shall be interpreted as meaning Lancaster County, as appropriate.

LANCASTER COUNTY

STANDARD ROADWAY DETAILS

SECTION 2

November 28, 2016

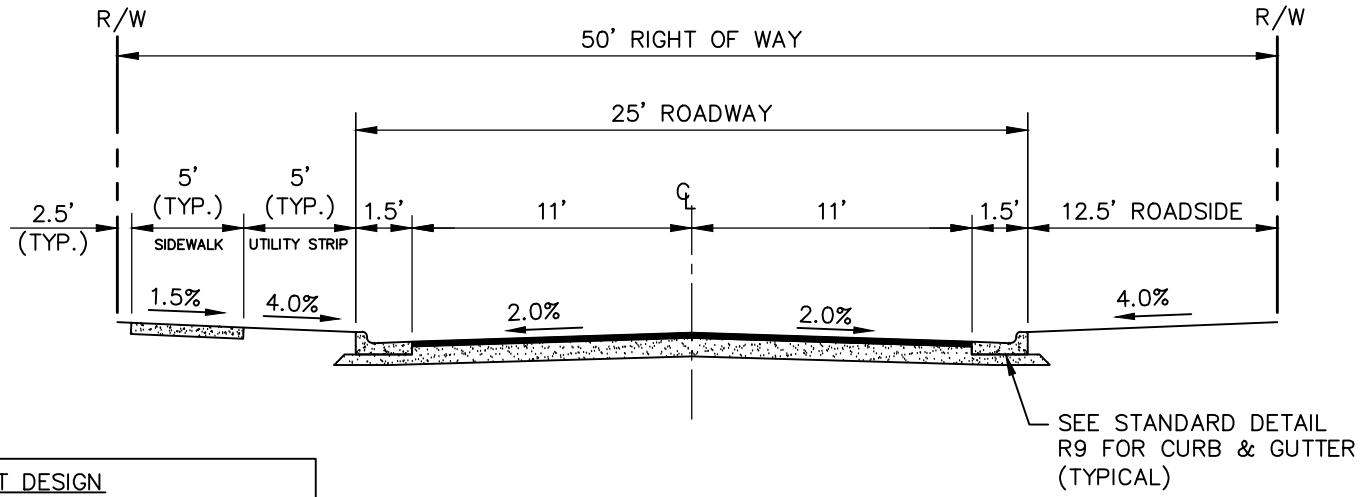

PAVEMENT DESIGN
1.5" TYPE C SURFACE COURSE
1.5" TYPE C INTERMEDIATE COURSE
8.0" A.B.C.

50' RIGHT OF WAY
25' ROADWAY SECTION
SECTION VIEW

NOTES:

1. NORMAL CROWN OF 2% UNLESS OTHERWISE DIRECTED BY DIRECTOR OF ENGINEERING.
2. PAVEMENT DESIGN SHALL BE THE GREATER AS SHOWN OR AS DETERMINED BY A CBR ANALYSIS.

Lancaster County
South Carolina

EFFECTIVE DATE 11/26/2016	REVISIONS:	LOCAL STREET (URBAN)	DETAIL No. R1 SHEET 1 OF 1

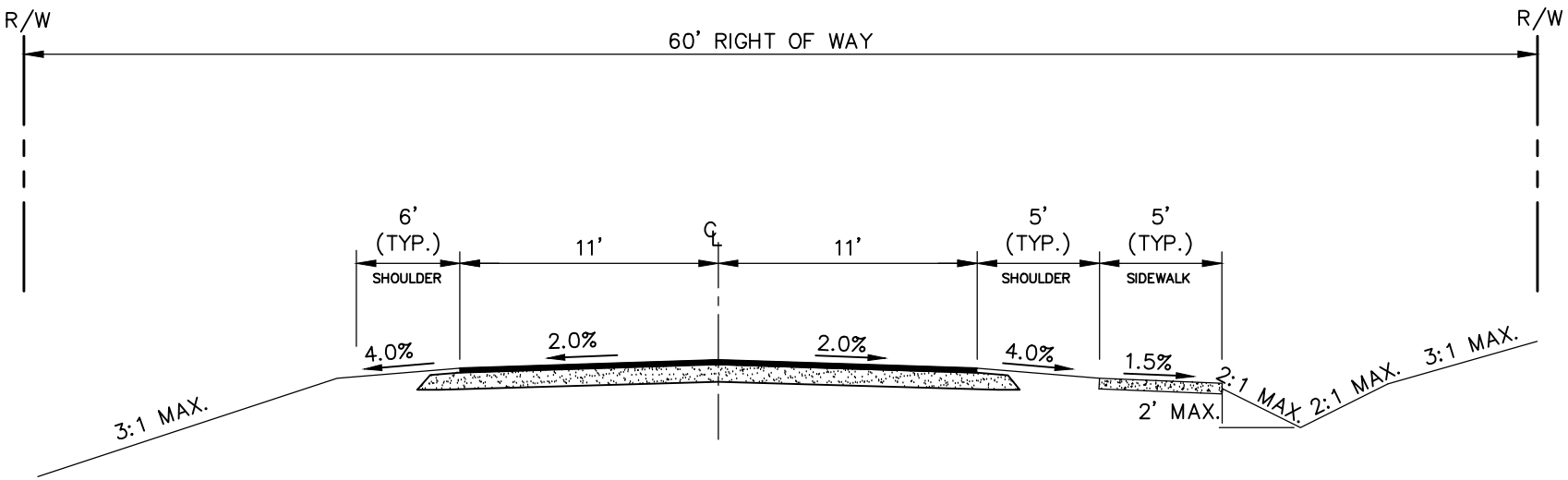

PAVEMENT DESIGN
1.5" TYPE C SURFACE COURSE
1.5" TYPE C INTERMEDIATE COURSE
8.0" A.B.C.

60' RIGHT OF WAY
22' ROADWAY SECTION
SECTION VIEW

NOTES:

1. NORMAL CROWN OF 2% UNLESS OTHERWISE DIRECTED BY DIRECTOR OF ENGINEERING.
2. PAVEMENT DESIGN SHALL BE THE GREATER AS SHOWN OR AS DETERMINED BY A CBR ANALYSIS.
3. SWALE SYSTEM DESIGNED TO CARRY AT LEAST THE 25 YEAR STORM.
4. VELOCITY WITHIN THE SWALE SHALL BE NON-EROSIVE.
5. DETAILED DRAINAGE CALCULATIONS REQUIRED.
6. ROADSIDE DITCHES SHALL BE LINED WITH NORTH AMERICAN GREEN SC 150BN OR APPROVED EQUAL.

Lancaster County
South Carolina

EFFECTIVE DATE 11/26/2016	REVISIONS:	LOCAL STREET (RURAL)	DETAIL No. R2 SHEET 1 OF 1

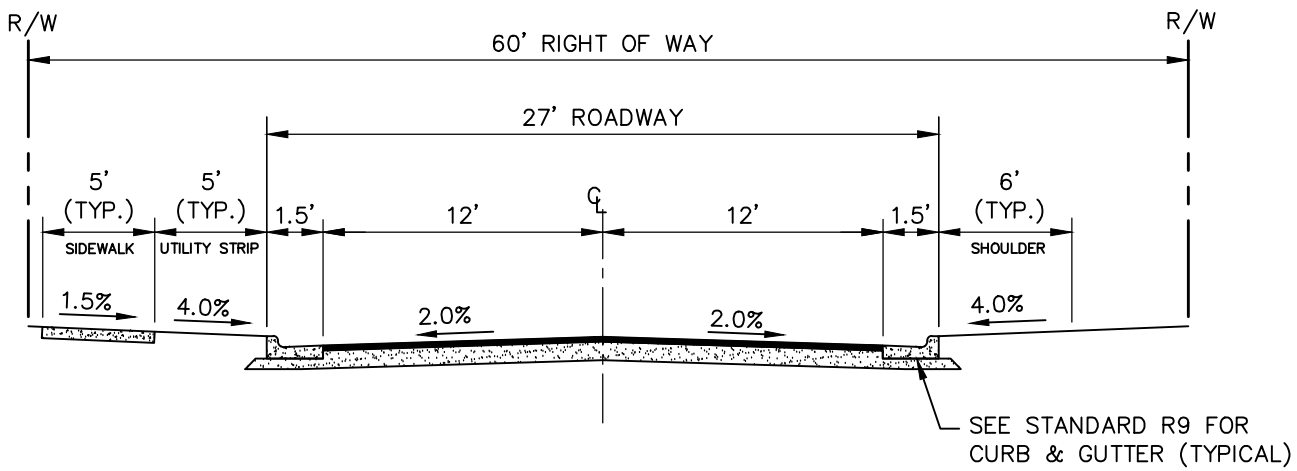

60' RIGHT OF WAY
27' ROADWAY SECTION
SECTION VIEW

PAVEMENT DESIGN
2.0" TYPE C SURFACE COURSE
3.0" TYPE C INTERMEDIATE COURSE
8.0" A.B.C.

NOTES:

1. NORMAL CROWN OF 2% UNLESS OTHERWISE DIRECTED BY DIRECTOR OF ENGINEERING.
2. PAVEMENT DESIGN SHALL BE THE GREATER AS SHOWN OR AS DETERMINED BY A CBR ANALYSIS.
3. SWALE SYSTEM DESIGNED TO CARRY AT LEAST THE 25 YEAR STORM.
4. VELOCITY WITHIN THE SWALE SHALL BE NON-EROSIVE.
5. DETAILED DRAINAGE CALCULATIONS REQUIRED.
6. ROADSIDE DITCHES SHALL BE LINED WITH NORTH AMERICAN GREEN SC 150BN OR APPROVED EQUAL.

Lancaster County
South Carolina

EFFECTIVE DATE 11/26/2016	REVISIONS:	COLLECTOR (URBAN)	DETAIL No. R3 SHEET 1 OF 1

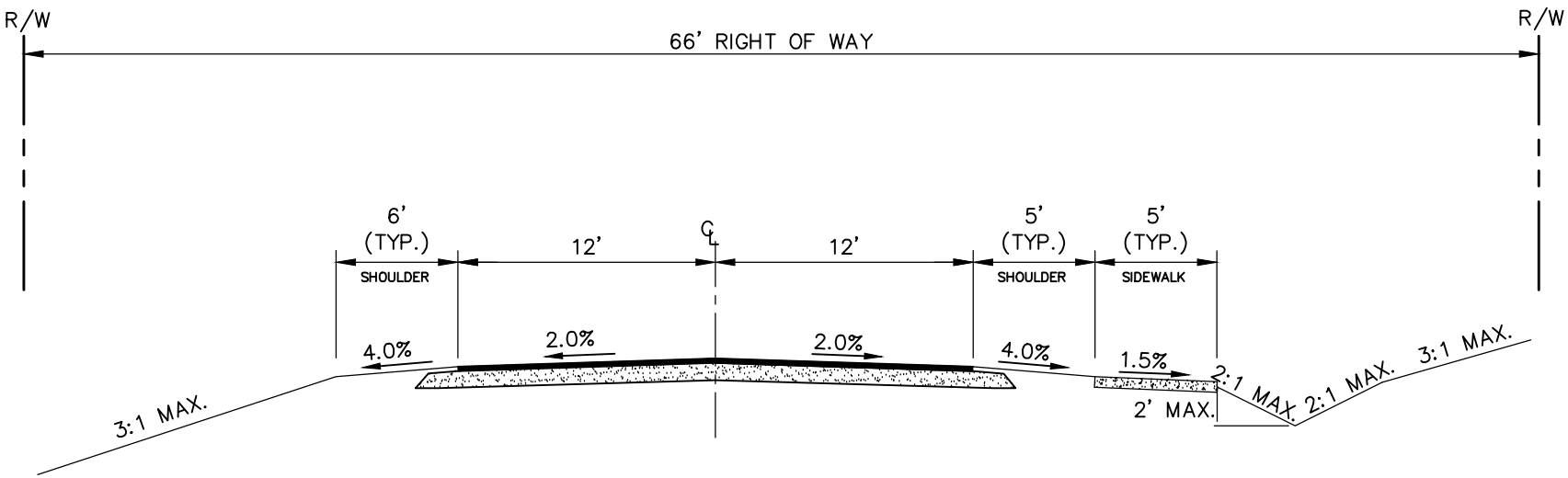

PAVEMENT DESIGN
2.0" TYPE C SURFACE COURSE
3.0" TYPE C INTERMEDIATE COURSE
8.0" A.B.C.

66' RIGHT OF WAY
24' ROADWAY SECTION
SECTION VIEW

NOTES:

1. NORMAL CROWN OF 2% UNLESS OTHERWISE DIRECTED BY DIRECTOR OF ENGINEERING.
2. PAVEMENT DESIGN SHALL BE THE GREATER AS SHOWN OR AS DETERMINED BY A CBR ANALYSIS.
3. SWALE SYSTEM DESIGNED TO CARRY AT LEAST THE 25 YEAR STORM.
4. VELOCITY WITHIN THE SWALE SHALL BE NON-EROSIVE.
5. DETAILED DRAINAGE CALCULATIONS REQUIRED.
6. ROADSIDE DITCHES SHALL BE LINED WITH NORTH AMERICAN GREEN SC 150BN OR APPROVED EQUAL.

Lancaster County
South Carolina

EFFECTIVE DATE 11/26/2016	REVISIONS:	COLLECTOR (RURAL)	DETAIL No. R4 SHEET 1 OF 1

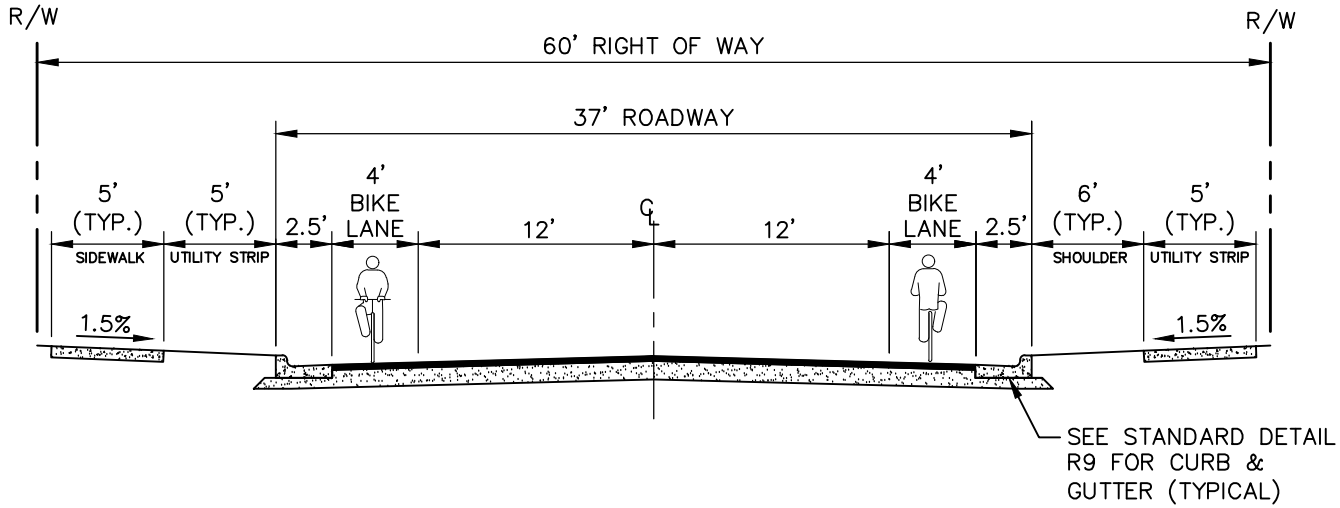

PAVEMENT DESIGN
3" S-9.5 B
8" A.B.C.

60' RIGHT OF WAY
37' ROADWAY SECTION
SECTION VIEW

NOTES:

1. NORMAL CROWN OF 2.0% UNLESS OTHERWISE DIRECTED BY DIRECTOR OF ENGINEERING.
2. PAVEMENT DESIGN SHALL BE AS SHOWN OR AS CALCULATED ACCORDING TO SPECIFICATIONS, WHICHEVER IS GREATER.
3. REVIEW QUALIFYING CRITERIA AND CROSS SECTIONS FOR "COLLECTOR AVENUE".

Lancaster County
South Carolina

EFFECTIVE DATE 11/26/2016	REVISIONS:	STANDARD COLLECTOR (BIKE LANES)	DETAIL No. R5 SHEET 1 OF 1

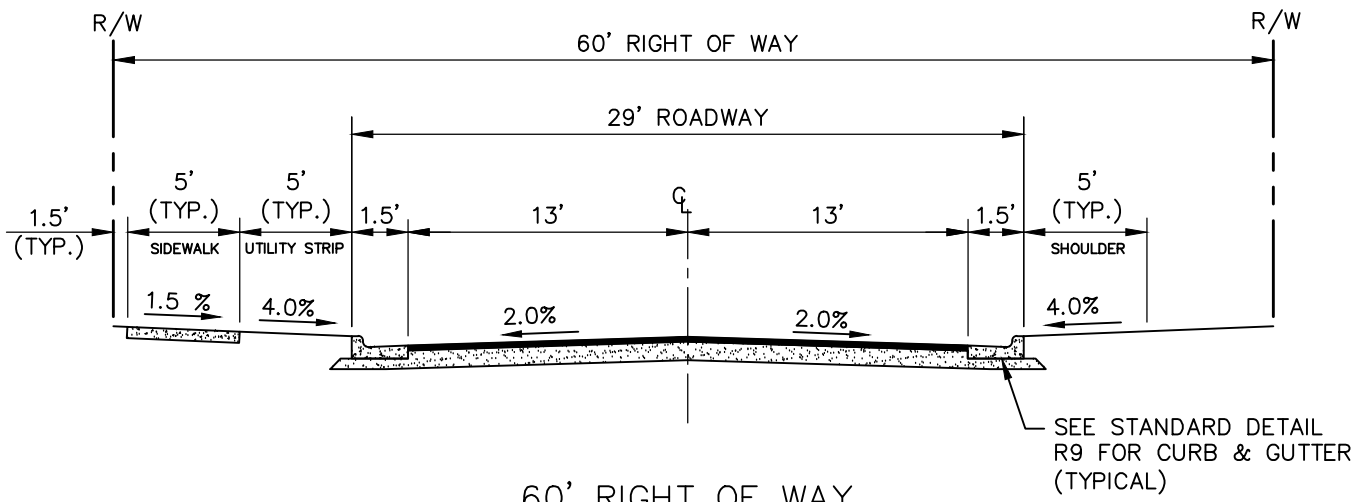

60' RIGHT OF WAY
29' ROADWAY SECTION
SECTION VIEW

PAVEMENT DESIGN
2.0" TYPE C SURFACE COURSE
4.0" TYPE C INTERMEDIATE COURSE
8.0" A.B.C.

NOTES:

1. NORMAL CROWN OF 2% UNLESS OTHERWISE DIRECTED BY DIRECTOR OF ENGINEERING.
2. PAVEMENT DESIGN SHALL BE THE GREATER AS SHOWN OR AS DETERMINED BY A CBR ANALYSIS.
3. SWALE SYSTEM DESIGNED TO CARRY AT LEAST THE 25 YEAR STORM.
4. VELOCITY WITHIN THE SWALE SHALL BE NON-EROSIVE.
5. DETAILED DRAINAGE CALCULATIONS REQUIRED.
6. ROADSIDE DITCHES SHALL BE LINED WITH NORTH AMERICAN GREEN SC 150BN OR APPROVED EQUAL.

Lancaster County
South Carolina

EFFECTIVE DATE 11/26/2016	REVISIONS:	COMMERCIAL/ARTERIAL (URBAN)	DETAIL No. R6 SHEET 1 OF 1

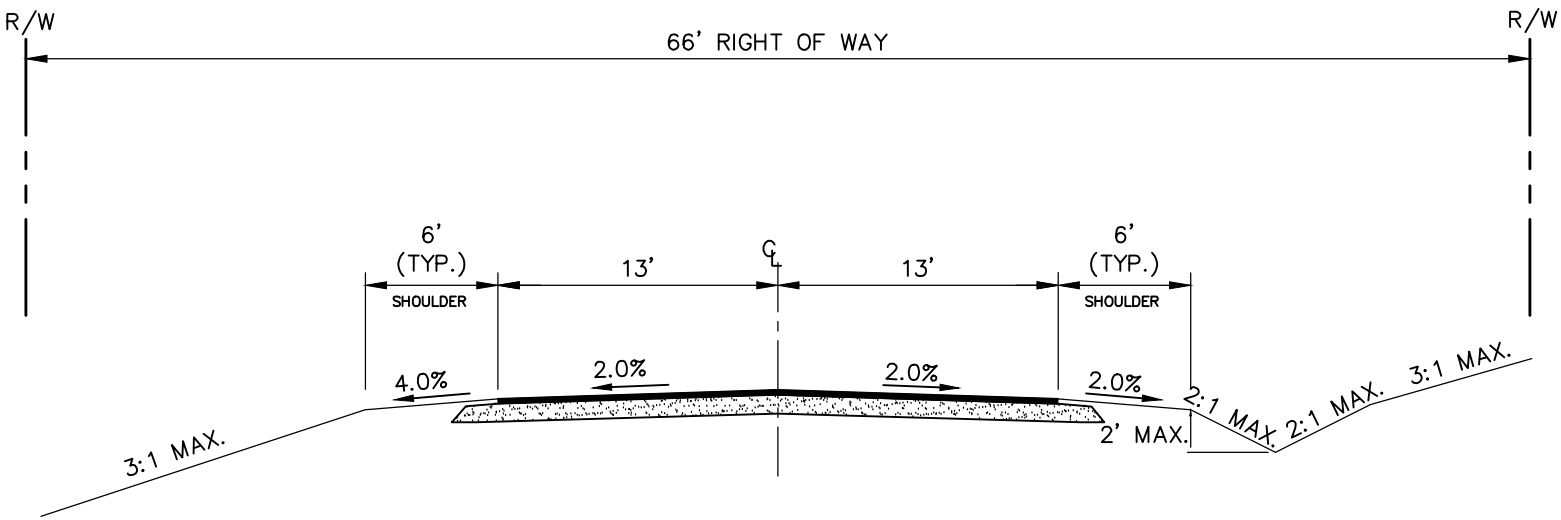

PAVEMENT DESIGN
2.0" TYPE C SURFACE COURSE
4.0" TYPE C INTERMEDIATE COURSE
8.0" A.B.C.

66' RIGHT OF WAY
26' ROADWAY SECTION
SECTION VIEW

NOTES:

1. NORMAL CROWN OF 2% UNLESS OTHERWISE DIRECTED BY DIRECTOR OF ENGINEERING.
2. PAVEMENT DESIGN SHALL BE THE GREATER AS SHOWN OR AS DETERMINED BY A CBR ANALYSIS.
3. SWALE SYSTEM DESIGNED TO CARRY AT LEAST THE 25 YEAR STORM.
4. VELOCITY WITHIN THE SWALE SHALL BE NON-EROSIVE.
5. DETAILED DRAINAGE CALCULATIONS REQUIRED.
6. ROADSIDE DITCHES SHALL BE LINED WITH NORTH AMERICAN GREEN SC 150BN OR APPROVED EQUAL.

Lancaster County
South Carolina

EFFECTIVE DATE 11/26/2016	REVISIONS:	COMMERCIAL/ARTERIAL (RURAL)	DETAIL No. R7 SHEET 1 OF 1

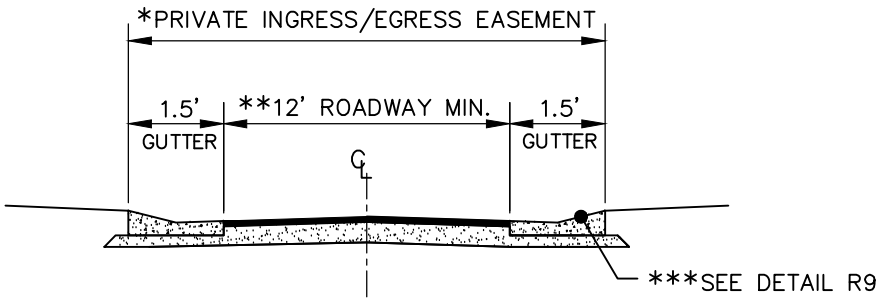

ALLEY (ONE WAY)

PAVEMENT DESIGN
1.5" TYPE C SURFACE COURSE
1.5" TYPE C INTERMEDIATE COURSE
8.0" A.B.C.

NOTES:

1. NORMAL CROWN OF 2% UNLESS OTHERWISE DIRECTED BY DIRECTOR OF ENGINEERING.
2. PAVEMENT DESIGN SHALL BE THE GREATER AS SHOWN OR AS DETERMINED BY A CBR ANALYSIS.
3. INCREASE ROADWAY WIDTH TO 16' FOR TWO WAY OPERATION.

Lancaster County
South Carolina

EFFECTIVE DATE 11/26/2016	REVISIONS:	ALLEY	DETAIL No. R8 SHEET 1 OF 1

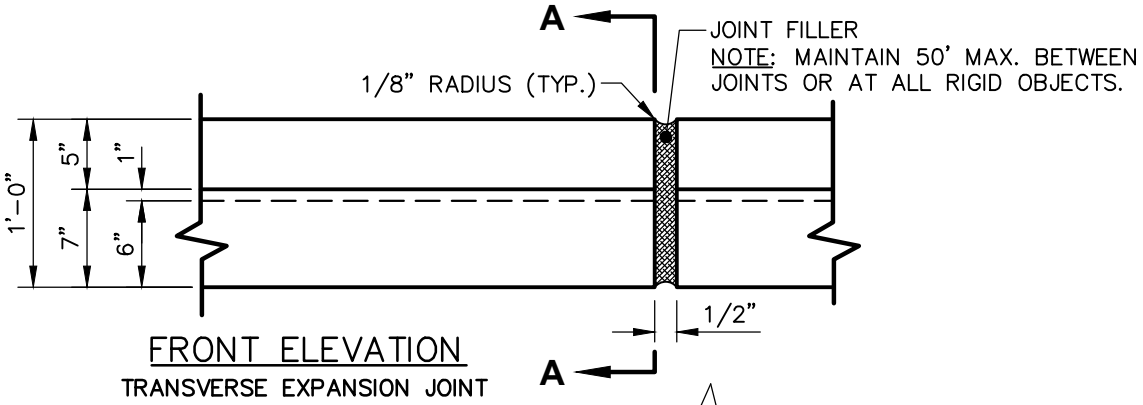

FRONT ELEVATION

TRANSVERSE EXPANSION JOINT

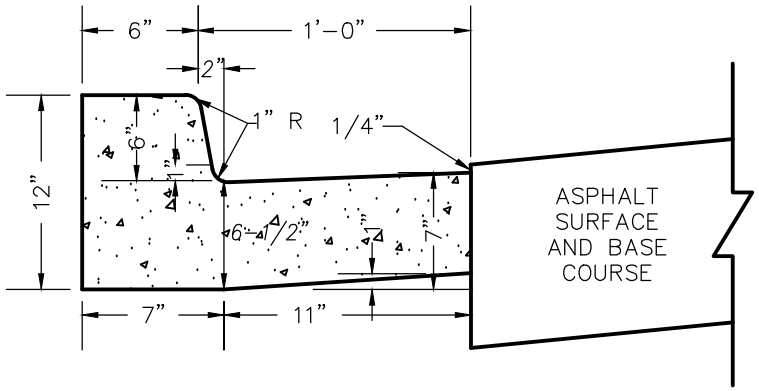

18" BARRIER CURB

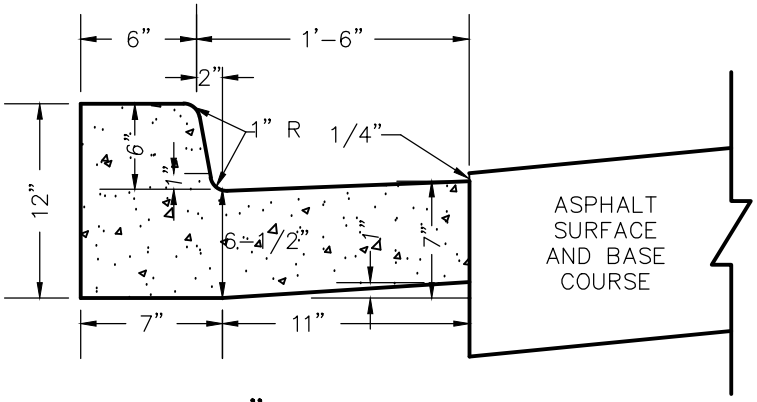

24" BARRIER CURB

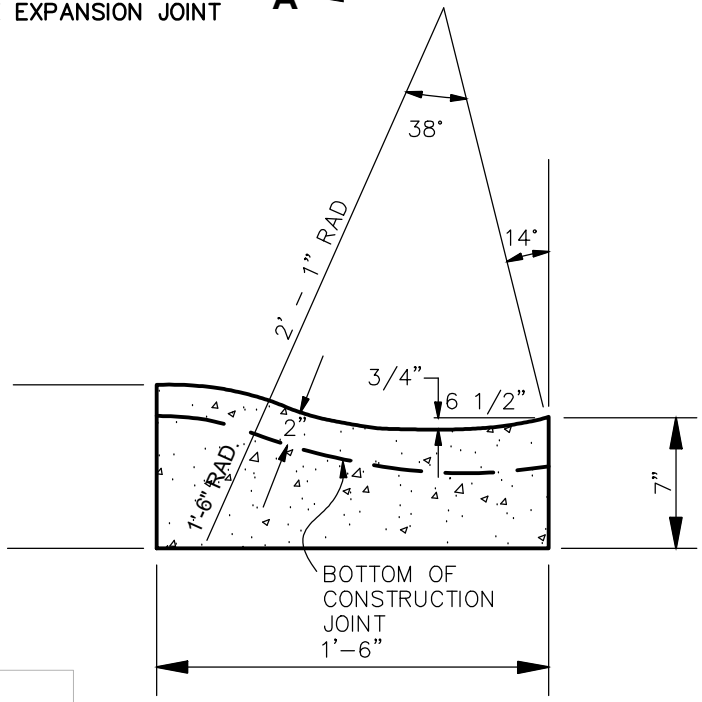

18" ROLLED CURB

NOTES:

1. CONCRETE SHALL BE 3,600 P.S.I.
2. CONTRACTION JOINTS SHALL BE SPACED AT 10' INTERVALS. (A 15' SPACING WILL BE ALLOWED WHEN A MACHINE IS USED.)
3. FINISH ALL CONCRETE WITH CURING COMPOUND.
4. TOP 6" OF SUBGRADE SHALL BE COMPACTED TO 100% STANDARD PROCTOR DENSITY.

Lancaster County
South Carolina

EFFECTIVE DATE 11/26/2016	REVISIONS:	STANDARD CONCRETE CURB & GUTTER	DETAIL No. R9 SHEET 1 OF 1

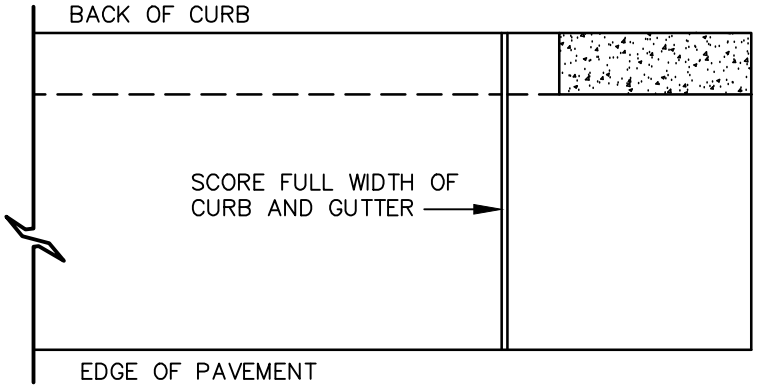

PLAN

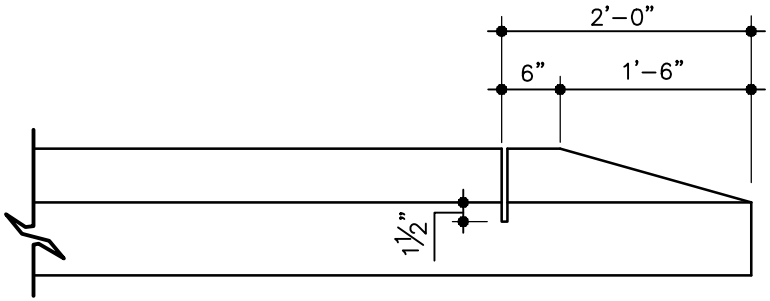

FRONT

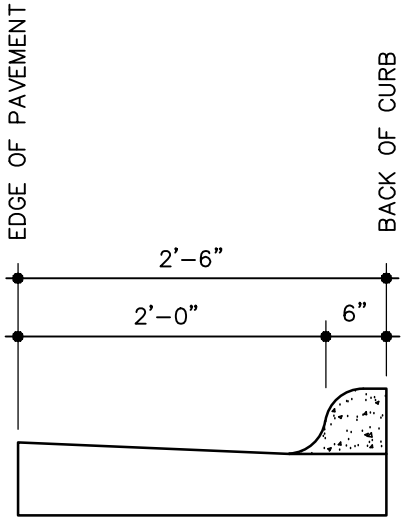

END

Lancaster County
South Carolina

EFFECTIVE DATE 11/26/2016	REVISIONS:	CURB END TAPER STANDARD METHOD OF ENDING CURB & GUTTER	DETAIL No. R10 SHEET 1 OF 1

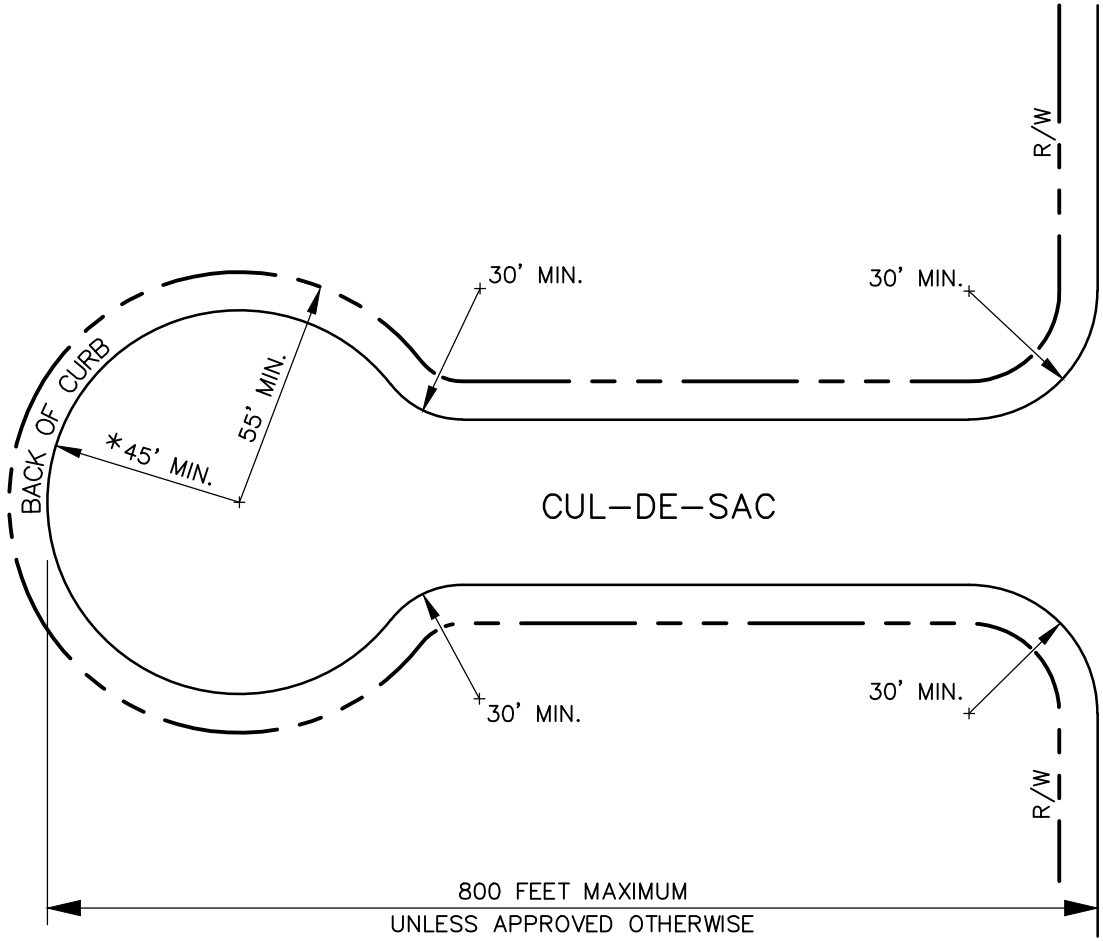

* RADIUS MAY BE REDUCED TO 42.5' IF CURB & GUTTER IS NOT USED.

Lancaster County
South Carolina

EFFECTIVE DATE 11/26/2016	REVISIONS:		RESIDENTIAL CUL-DE-SAC DIMENSIONS	DETAIL No.
	1	9/25/2017		R11
				SHEET 1 OF 1

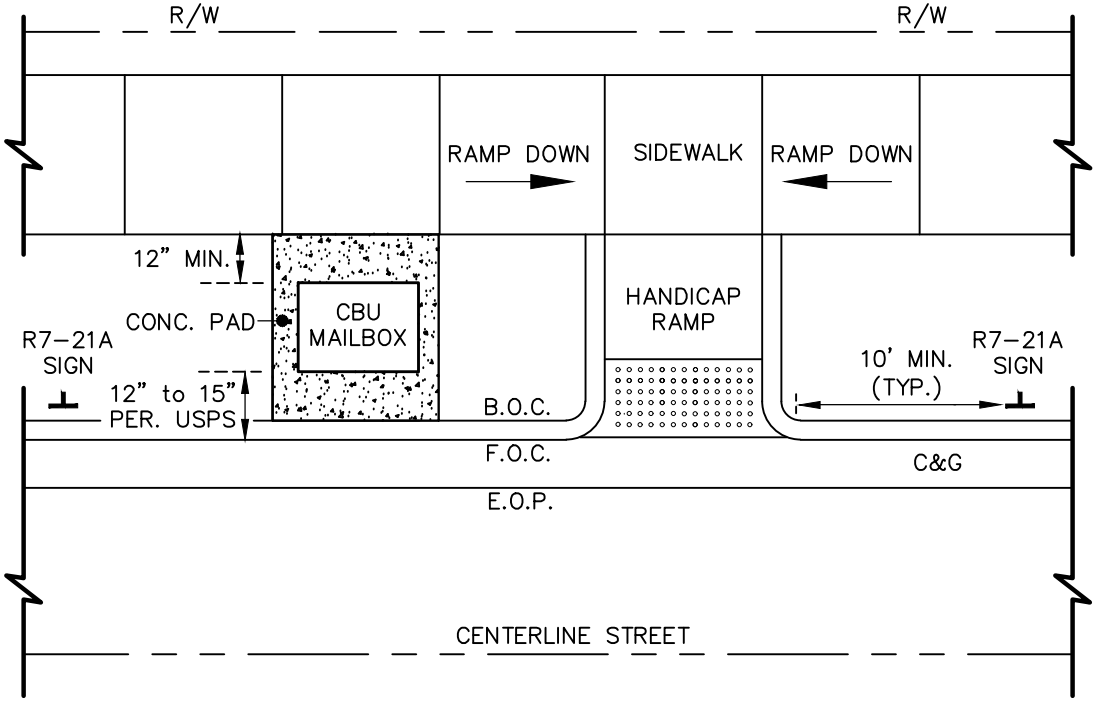

TYPE I-A

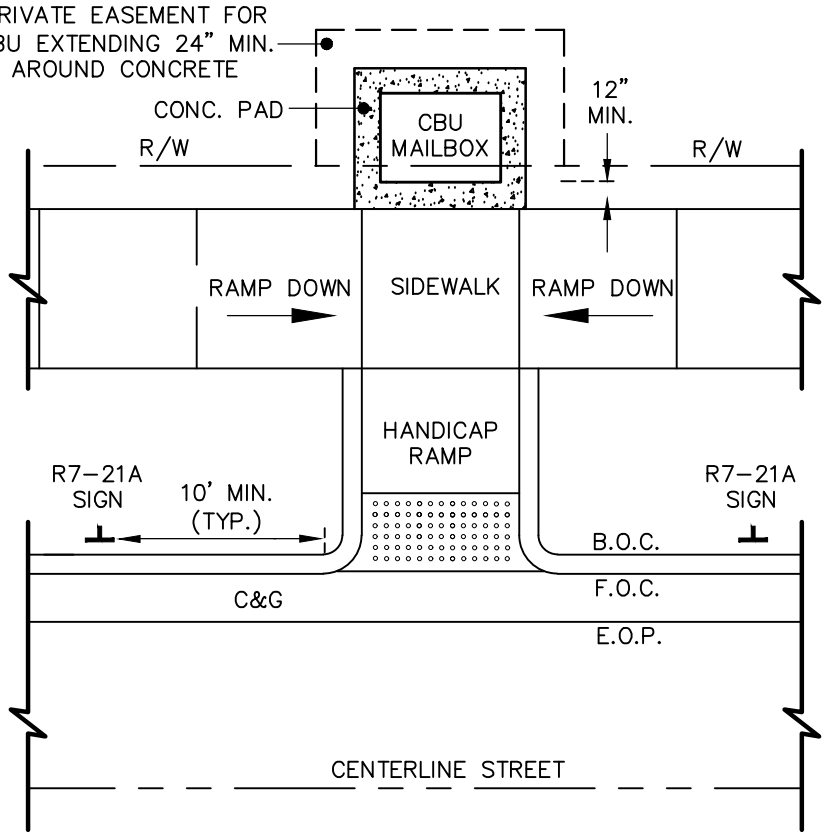

TYPE I-B

NOTES:

1. CBU SHALL CONTAIN NO MORE THAN 13 MAIL RECEPTACLES.
2. LOCATE CBU IN COMMON OPEN AREAS OR ON PROPERTY LINE IF POSSIBLE.
3. MAXIMUM HEIGHT OF CBU SHALL BE 62".
4. CBU SHALL NOT BE LOCATED NEAR UTILITY LINES, WATER METERS, OR CLEAN-OUTS.
5. ACCESS TO CBU BY RESIDENCES SHALL BE BY SIDEWALK SIDE ONLY.
6. R7-21A SIGN SHALL READ "MAIL PARKING, 15 MINUTE LIMIT".

Lancaster County
South Carolina

EFFECTIVE DATE 11/26/2016	REVISIONS:	CLUSTER BOX UNIT (CBU) MAILBOX - TYPE I	DETAIL No. R12 SHEET 1 OF 1

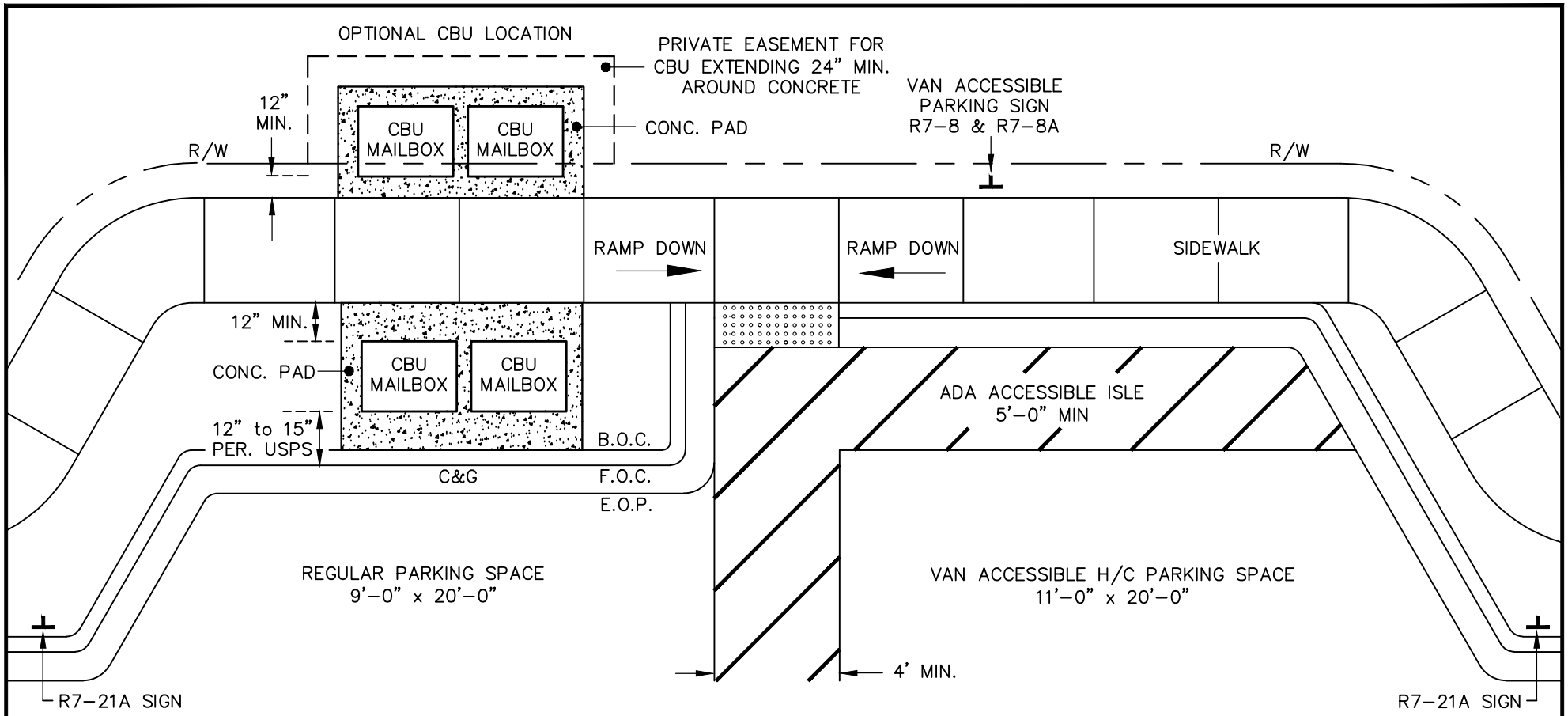

NOTES:

1. CBU SHALL CONTAIN NO MORE THAN A TOTAL OF 26 MAIL RECEPTACLES.
2. LOCATE CBU ON PROPERTY LINE OR NEAR COMMON AREAS, IF POSSIBLE.
3. MAXIMUM HEIGHT OF CBU SHALL BE 62".
4. CBU SHALL NOT BE LOCATED NEAR UTILITY LINES, WATER METERS, OR CLEAN-OUTS.
5. ACCESS TO CBU BY RESIDENCES SHALL BE BY SIDEWALK SIDE ONLY.
6. ACCESSIBLE SPACE SHALL HAVE LONGITUDINAL AND TRANSVERSE SLOPES NOT EXCEEDING 2%.
7. R7-21A SGIN SHALL READ "MAIL PARKING, 15 MINUTE LIMIT".

Lancaster County
South Carolina

EFFECTIVE DATE 11/26/2016	REVISIONS:	CLUSTER BOX UNIT (CBU) MAILBOX - TYPE II	DETAIL No. R13 SHEET 1 OF 1

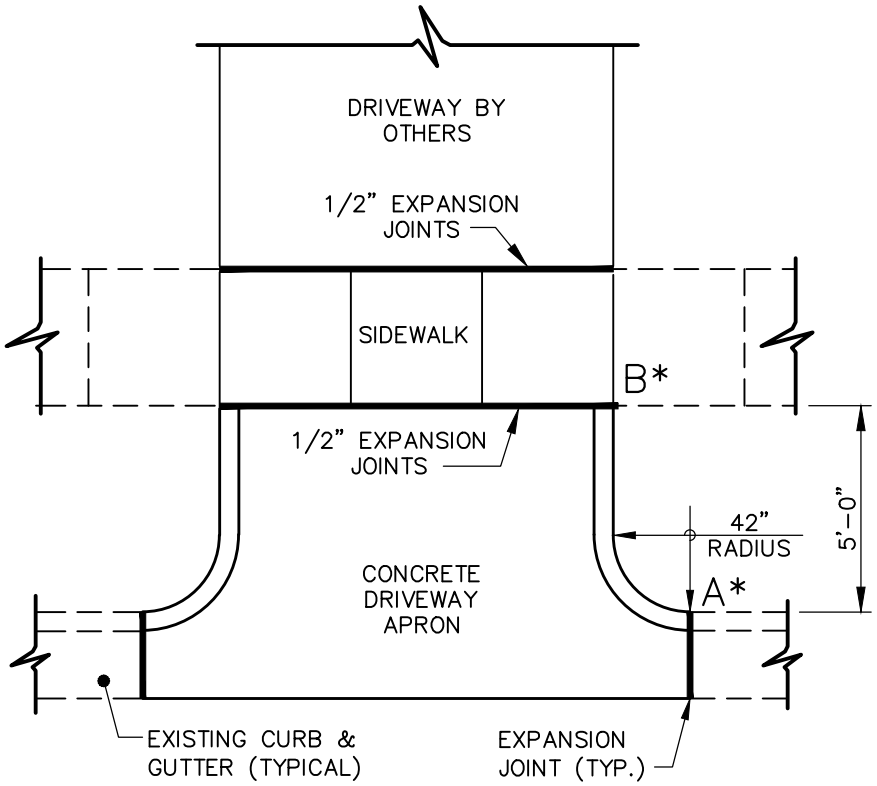

PLAN VIEW

NOTES TO CONTRACTOR:

- RESIDENTIAL DRIVEWAYS TO BE 12 FEET TO 18 FEET IN WIDTH.
- COMMERCIAL AND INDUSTRIAL DRIVEWAYS TO BE A MINIMUM OF 20 FEET FOR 2-WAY, 16 FEET FOR 1-WAY, AND A MAXIMUM OF 40 FEET WIDE.
- ALL CONCRETE SHALL BE 3600 P.S.I.

* ELEVATION "B" MINUS ELEVATION "A" EQUALS 1 INCH.

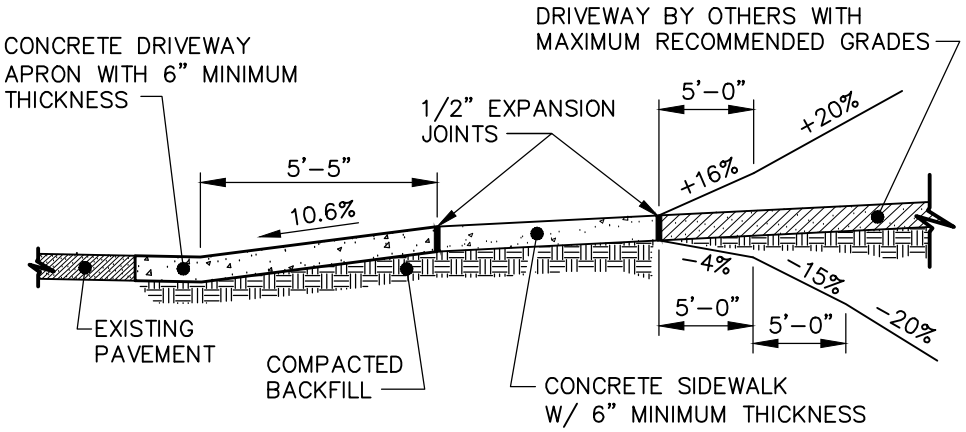

TYPICAL SECTION

NOTES:

1. CURB SHALL BE TAPERED TO FINISH FLUSH WITH SIDEWALK.
2. BEGINNING RADIUS SHALL NOT ENCROACH ON ADJACENT PROPERTIES BASED ON A PROJECTION OF THE PROPERTY LINE FROM THE RIGHT OF WAY TO THE CURB LINE.
3. THE COUNTY IS NOT RESPONSIBLE FOR VEHICLES THAT DRAG DUE TO GRADE OF DRIVEWAY. THE DRIVEWAY IS PRIVATELY MAINTAINED.

Lancaster County
South Carolina

EFFECTIVE DATE 11/26/2016	REVISIONS:	STANDARD DRIVEWAY APRON	DETAIL No. R14 SHEET 1 OF 1

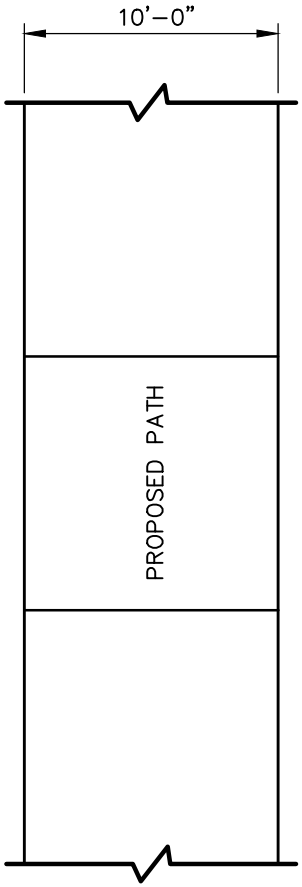

PLAN VIEW

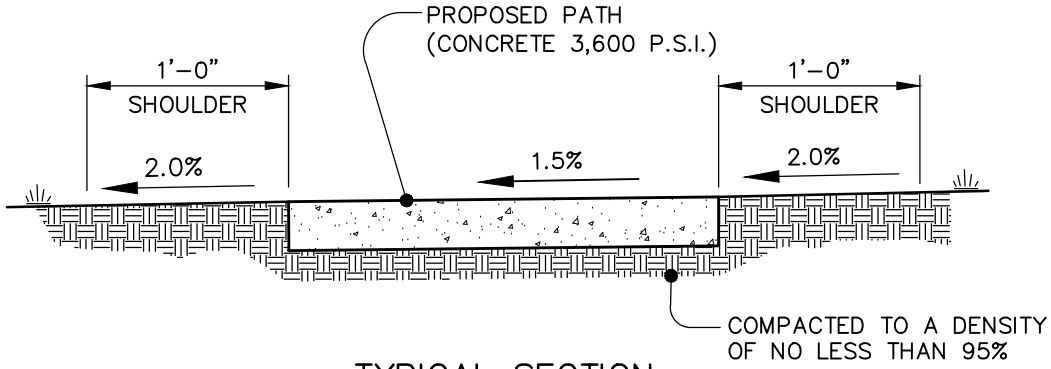

TYPICAL SECTION

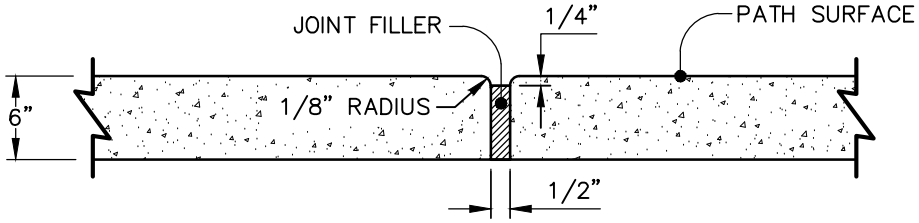

TRANSVERSE EXPANSION JOINT

NOTES:
1. TRANSVERSE EXPANSION JOINTS TO BE A MAXIMUM OF 50 FEET.
2. ALL CONCRETE TO BE FINISHED WITH CURING COMPOUND.
3. A 6 INCH DEPTH IS REQUIRED.
4. SAW CUT JOINTS EVERY 10 FEET OR WIDTH.
5. NO UTILITY SURFACE COVERS/PLATES/MANHOLES (i.e. WATERLINE VALVE COVERS, ETC.) SHALL BE LOCATED WITHIN TRAIL AND SHALL BE MINIMUM 2 FEET FROM THE EDGE OF TRAIL.
6. ALL TRAILS SHALL BE LOCATED MINIMUM 5 FEET FROM THE BACK OF CURB.

Lancaster County
South Carolina

EFFECTIVE DATE 11/26/2016	REVISIONS:	STANDARD CONCRETE MULTI-USE PATH	DETAIL No. R15 SHEET 1 OF 1

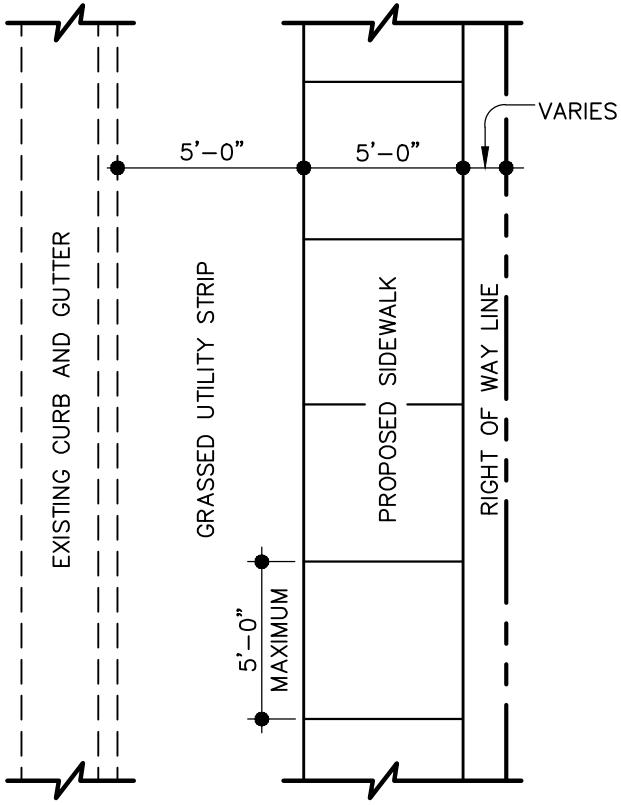

PLAN VIEW

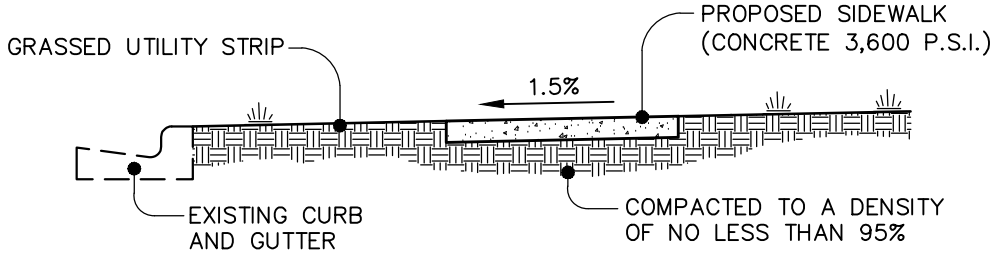

TYPICAL SECTION

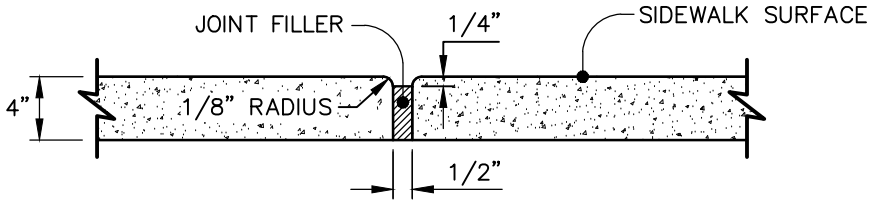

TRANSVERSE EXPANSION JOINT

NOTES:

1. TRANSVERSE EXPANSION JOINTS TO BE A MAXIMUM OF 50 FEET.
2. ALL CONCRETE TO BE FINISHED WITH CURING COMPOUND.
3. A 6 INCH DEPTH IS REQUIRED AT LOCATIONS OF DRIVEWAY CROSSINGS, AT STREET INTERSECTIONS (ALONG THE LENGTH OF RADIUS CURB RETURNS), AND IN THE HANDICAP RAMPS.
4. NO UTILITY SURFACE COVERS/PLATES/MANHOLES (i.e. WATERLINE VALVE COVERS, ETC.) SHALL BE LOCATED WITHIN SIDEWALK AND SHALL BE MINIMUM 2 FEET FROM THE EDGE OF SIDEWALK.

Lancaster County
South Carolina

EFFECTIVE DATE 11/26/2016	REVISIONS:	STANDARD CONCRETE SIDEWALK	DETAIL No. R16 SHEET 1 OF 1

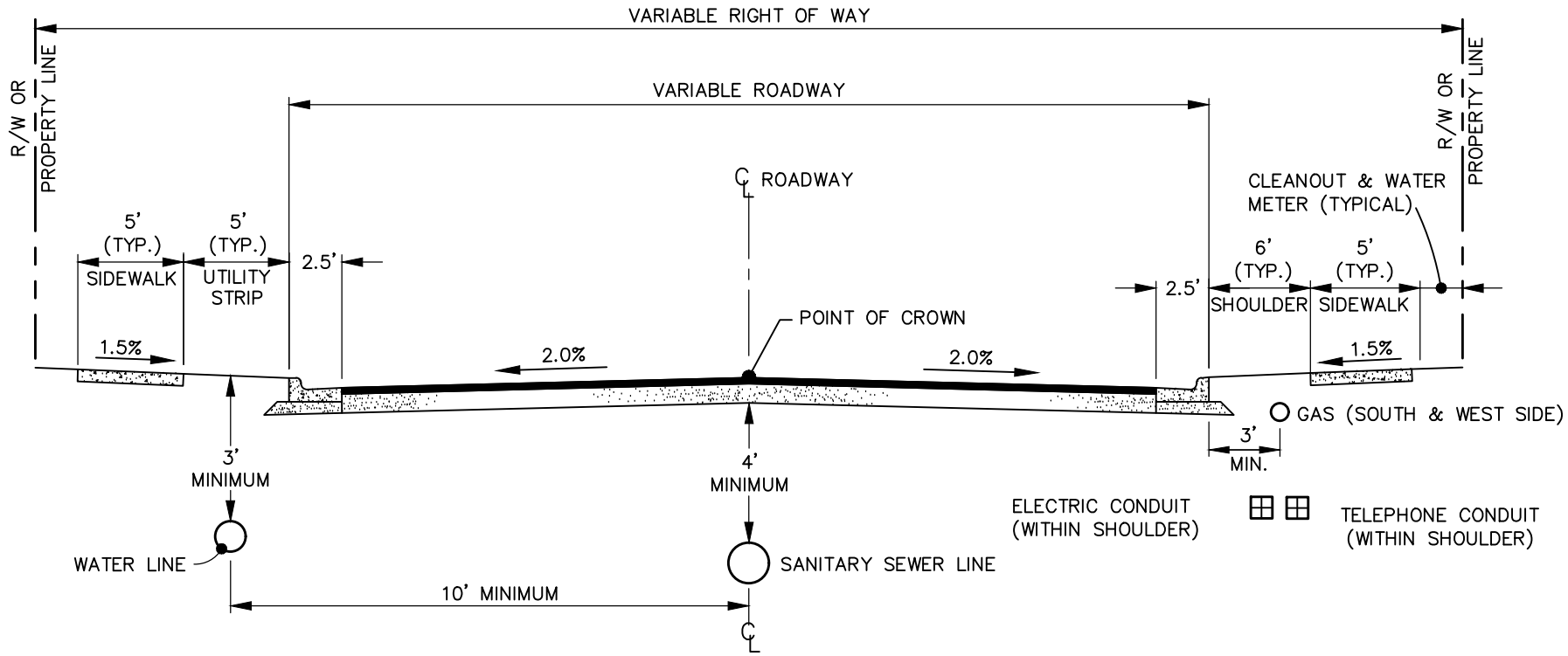

CROSS SECTION

NOTES:

1. THERE SHALL BE AN 18 INCH VERTICAL SEPARATION BETWEEN WATER AND SEWER LINES WHEN DIRECTLY OVERHEAD.
2. WATER AND/OR SANITARY SEWER LINES SHALL BE A MINIMUM OF TWO FEET FROM THE EDGE OF THE CURB AND GUTTER.
3. ENCROACHMENT ONTO ROAD RIGHT OF WAY SHALL FOLLOW CONDITIONS OF THE APPLICABLE ENCROACHMENT AGREEMENT.

Lancaster County
South Carolina

EFFECTIVE DATE 11/26/2016	REVISIONS:	STANDARD UTILITY LOCATIONS IN STREET	DETAIL No. R17 SHEET 1 OF 1

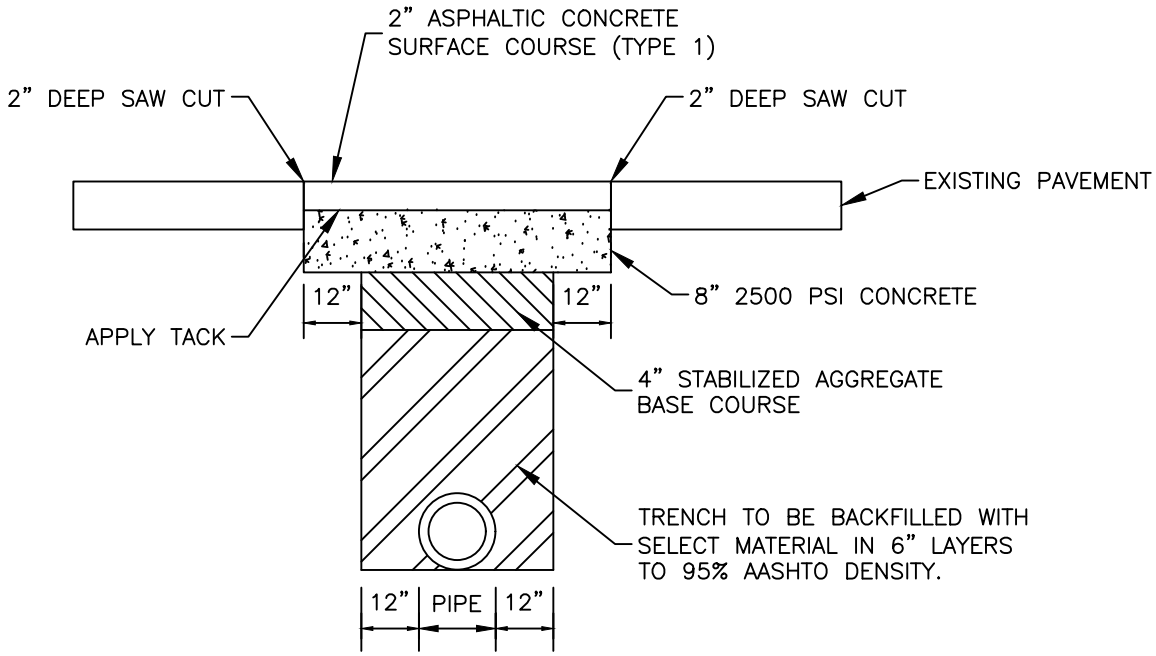

Lancaster County
South Carolina

EFFECTIVE DATE 11/26/2016	REVISIONS:	OPEN CUT REPAIR FOR ROADWAYS	DETAIL No. R18 SHEET 1 OF 1

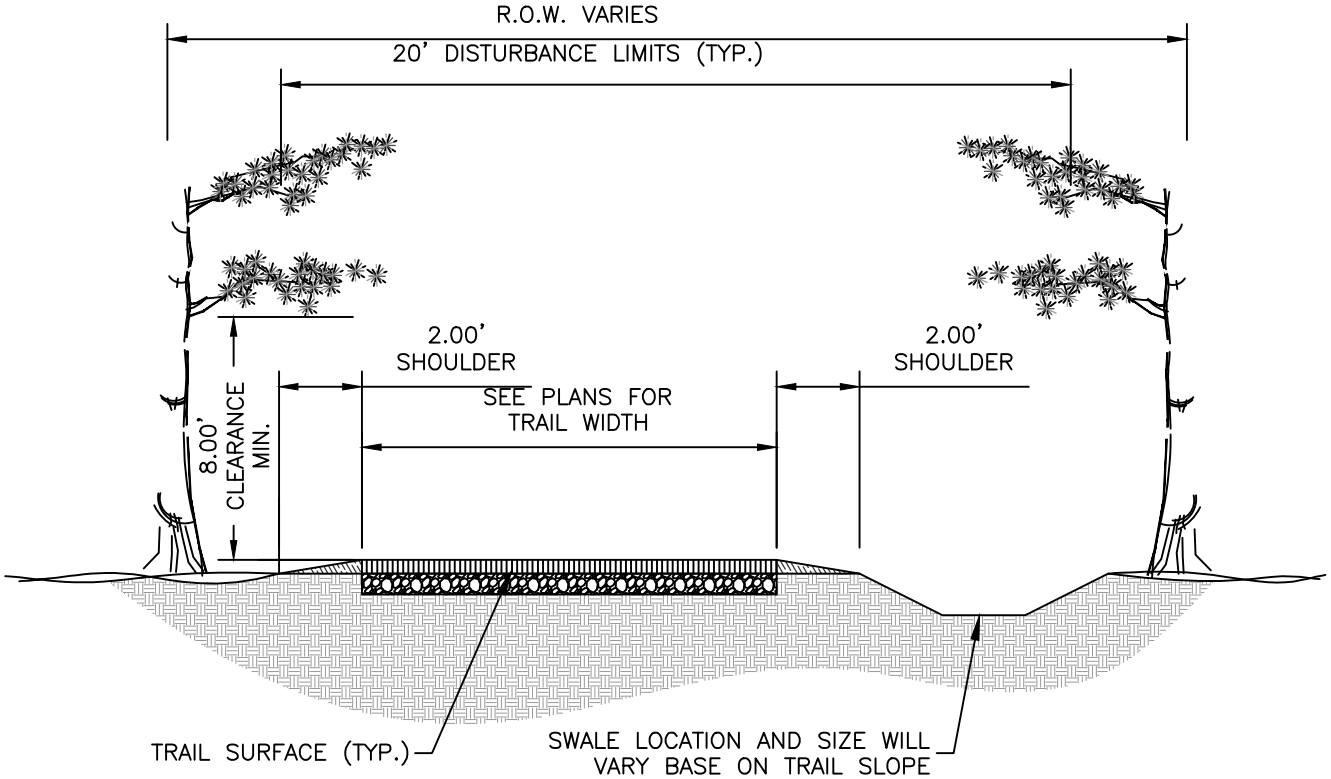

ASPHALT SURFACE

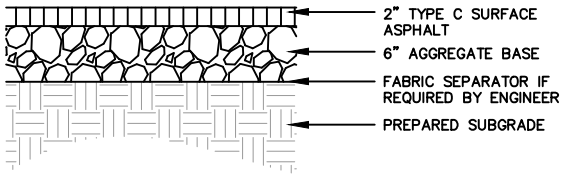

GRAVEL SURFACE

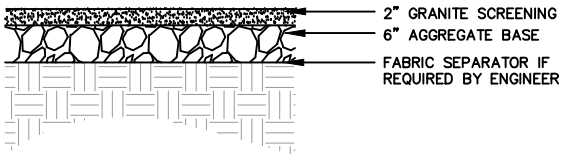

CONCRETE SURFACE

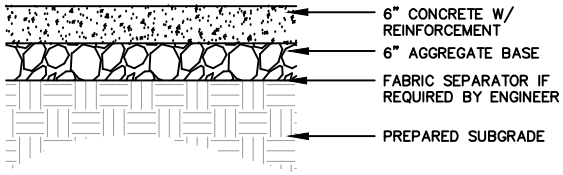

NOTES:

1.) ALL TRAIL MATERIAL SHALL COMPLY WITH GEOTECTNICAL REPORT AND BE APPROVED BY THE ENGINEER/LANDSCAPE ARCHITECT.
2.) THE CONTRACTOR IS RESPONSIBLE FOR STABILIZING ALL DISTURBED AREAS OF TRAIL CONSTRUCTION.
3.) ALL LAND CLEARING SHALL BE CONTAINED WITHIN A 20' LIMIT OF DISTURBANCE. SEE PLANS FOR LIMIT OF DISTURBANCE.
4.) ALL LAND CLEARING, GRUBBING, AND DEMOLITION MATERIALS SHALL BE REMOVED AND LEGALLY DISPOSED OFF SITE.
5.) ALL TREES WITH DIAMETERS 6" OR GREATER SHALL BE FLAGGED AND APPROVED BY THE LANDSCAPE ARCHITECT/OWNER BEFORE REMOVAL.
6.) THE CONTRACTOR IS TO ENSURE POSITIVE DRAINAGE FOR THE ENTIRE TRAIL AREA AND NO PONDING SHALL OCCUR.
7.) ALL TRAIL ARE TO HAVE A CROSS SLOPE OR BE CROWNED WITH A 1% MIN. AND 2% MAX SLOPE.
8.) ALL PROOF ROLES SHALL BE COMPLETE USING TANDEM AXLE 15 TON MIN. CONSTRUCTION EQUIPMENT.
9.) REFER TO CONSTRUCTION PLAN FOR ADDITIONAL INFORMATION.
10.) ALL NATURAL SURFACE TRAILS SHALL MEET THE GUIDELINE OF THE NATIONAL FOREST SERVICE. SEE "Accessibility Guidebook for Outdoor Recreation and Trails" http://www.fs.fed.us/recreation/programs/accessibility/pubs/htmlpubs/htm12232806/toc.htm

Lancaster County
South Carolina

EFFECTIVE DATE 11/26/2016	REVISIONS:	TRAIL DETAIL	DETAIL No. R19 SHEET 1 OF 2

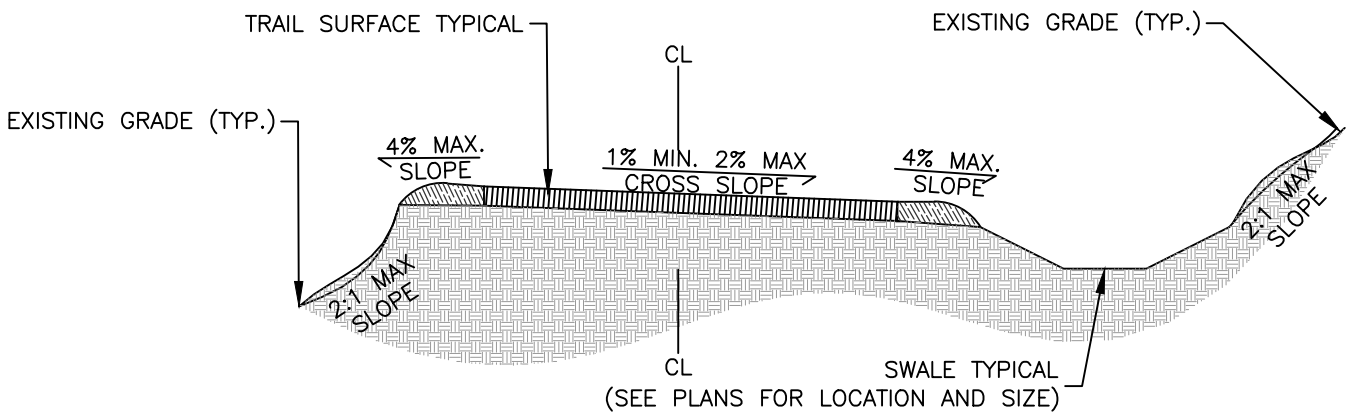

SUPER ELEVATED TRAIL

NOTES:
1.) SEE PLANS FOR DETERMINATION FOR TRAIL SLOPES.
2.) SIDE SLOPE USED TO TIE INTO EXISTING GRADE SHALL NOT EXCEED 2:1.

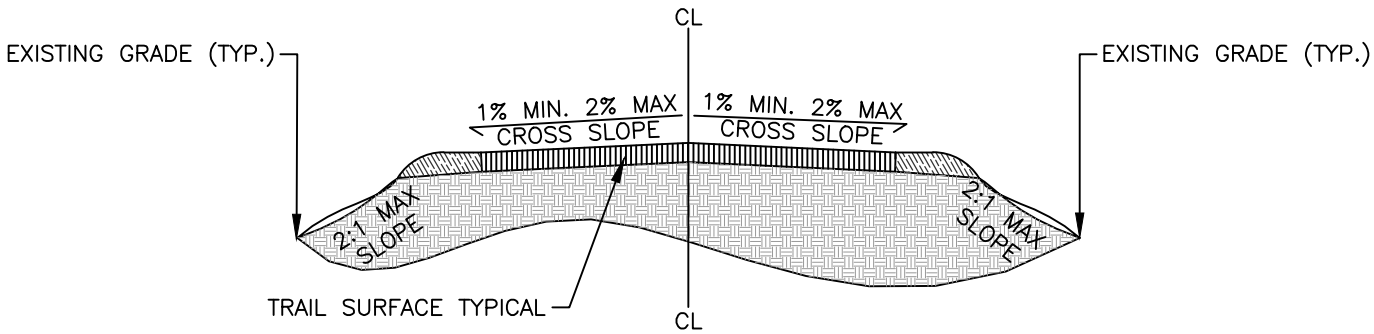

CROWNED TRAIL

TRAIL WIDTH REQUIREMENTS

TRAIL TYPE	TRAIL WIDTH
SHARED USE TRAIL	10' MIN. – 12' PREFERRED (2' MIN. SHOULDER ON BOTH SIDES OF TRAIL)
FOOTPATH HIKING	3' MIN. – 6' PREFERRED
BOARDWALKS	8' MIN. (UP TO 14' IF EMERGENCY VEHICLES IS REQUIRED)
EQUESTRIAN	4' MIN. – 6' PREFERRED (CAN BE ADDED TO ONE SIDE OF SHARED USE TRAIL)

NOTE: IN HIGH USE ZONES THE COUNTY RESERVES THE RIGHT TO INCREASE THE WIDTH OF SHARED USE TRAILS UP TO 14'

Lancaster County
South Carolina

EFFECTIVE DATE 11/26/2016	REVISIONS:		TRAIL DETAIL	DETAIL No.
	1	6/11/2018		R19
				SHEET 2 OF 2

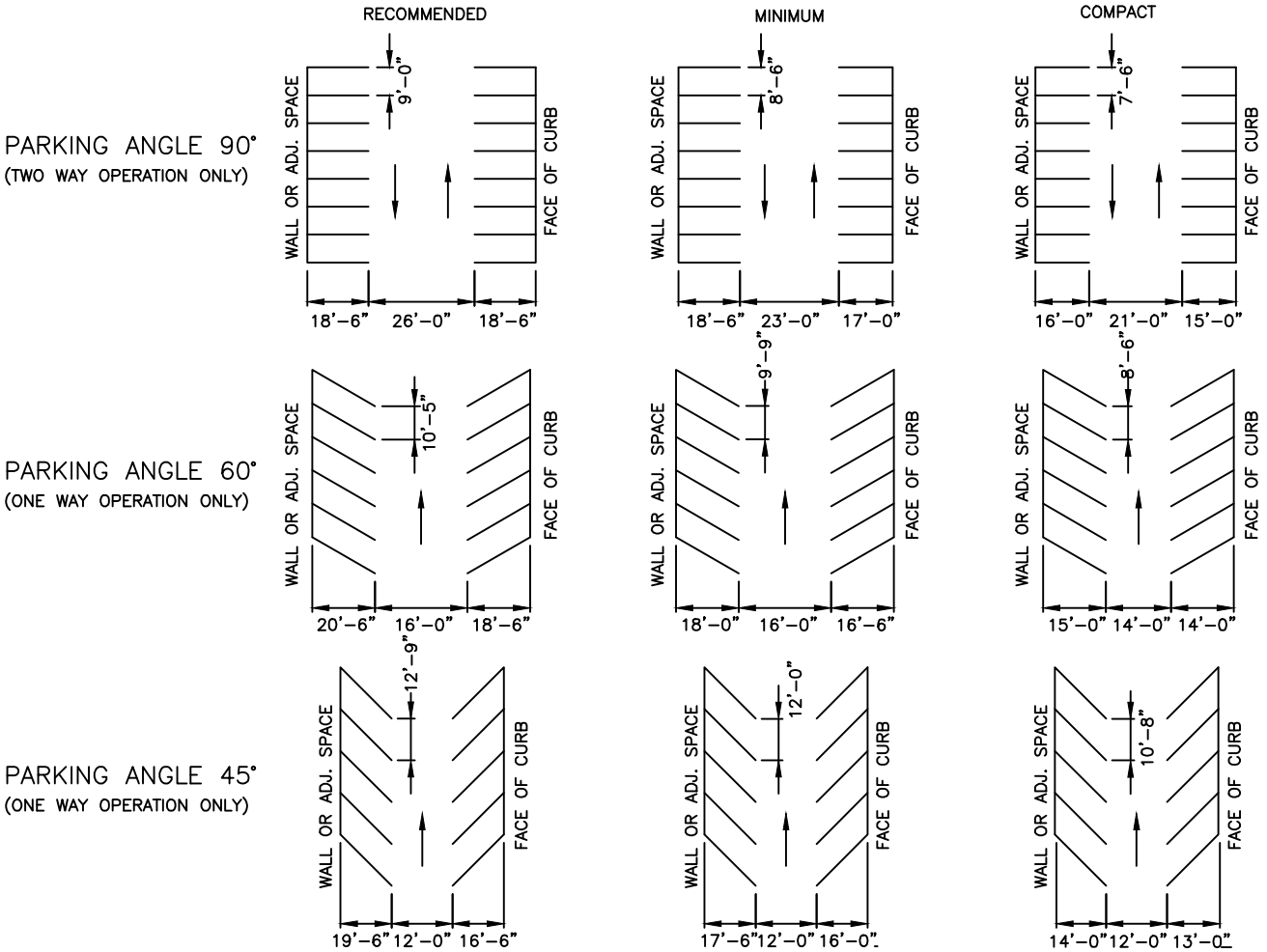

NOTES:

1. PAVEMENT MARKINGS SHALL BE 4" WHITE PAINT.
2. ALTERNATIVE PARKING ANGLES, AISLE WIDTHS, AND OPERATION (TWO-WAY ANGLED PARKING OR REVERSE-ANGLE PARKING) WILL BE CONSIDERED ON A CASE-BY-CASE BASIS.

Lancaster County
South Carolina

NOT TO SCALE

EFFECTIVE DATE 11/26/2016	REVISIONS:	PARKING STANDARDS	DETAIL No. R20 SHEET 1 OF 3

SIDEWALK ADJACENT TO HEAD–IN OR BACK–IN PARKING SHALL BE AT LEAST 7 FEET WIDE.

PARKING ON ONE SIDE OF A SIDEWALK

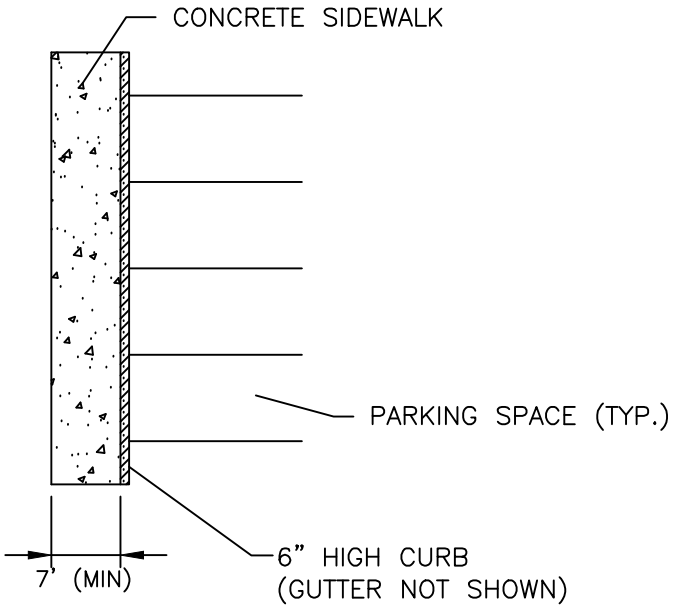

SIDEWALK BETWEEN TWO ROWS OF HEAD–IN OR BACK–IN PARKING SHALL BE AT LEAST 9 FEET WIDE.

PARKING ON BOTH SIDES OF A SIDEWALK

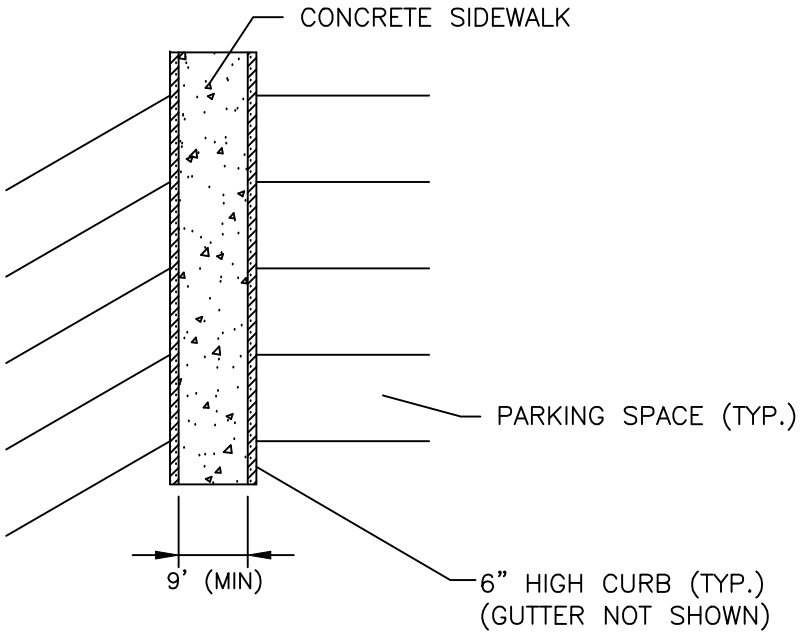

NOTES:

1. A 2–FOOT–WIDE PLANTING STRIP LOCATED AT THE BACK OF CURB CAN BE USED IN LIEU OF 2 FEET OF SIDEWALK WIDTH.
2. PARKING AT ANY ANGLE OTHER THAN PARALLEL SHALL BE SUBJECT TO THIS STANDARD.
3. IF MONOLITHIC CURB & SIDEWALK IS USED, ADD 6" TO ALL DIMENSIONS (1' IF PARKING ON BOTH SIDES).
4. WHEELSTOPS SHALL ONLY BE USED IN LIEU OF 2 FEET OF SIDEWALK WITH THE APPROVAL OF THE COUNTY AND WHEN EXISTING CONDITIONS PREVENT CONSTRUCTION OF A 7–FOOT/9–FOOT SIDEWALK. WHEELSTOPS SHALL BE 6" HIGH, MADE OUT OF 3600–PSI REINFORCED CONCRETE, AND ANCHORED WITH #5 OR GREATER REBAR (2' MINIMUM LENGTH). REBAR HOLES SHALL BE GROUTED UPON INSTALLATION. WHEELSTOPS SHALL BE PLACED AT 2 FEET FROM THE EDGE OF SIDEWALK OR OBSTRUCTION.

Lancaster County
South Carolina

NOT TO SCALE

EFFECTIVE DATE 11/26/2016	REVISIONS:	PARKING STANDARDS (CONT.)	DETAIL No. R20 SHEET 2 OF 3

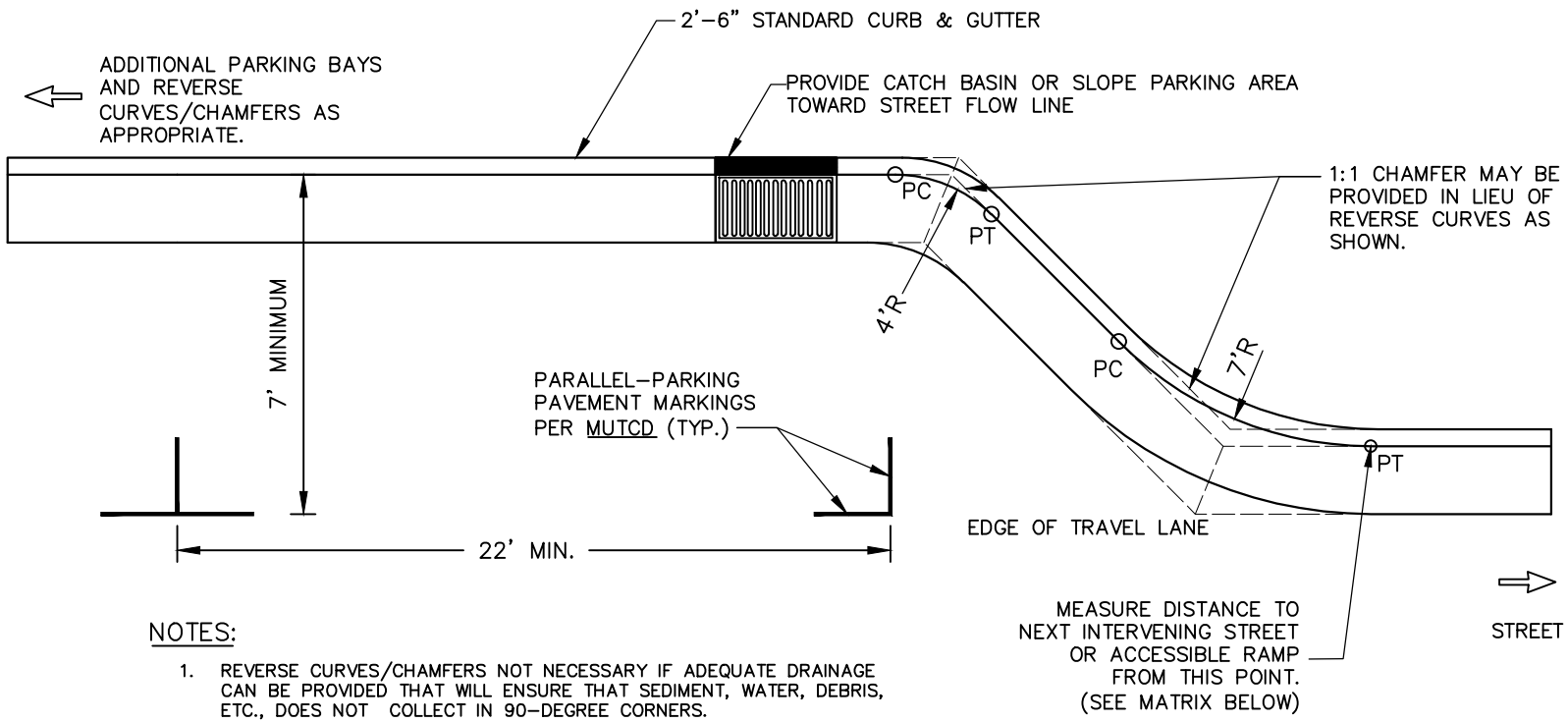

NOTES:

1. REVERSE CURVES/CHAMFERS NOT NECESSARY IF ADEQUATE DRAINAGE CAN BE PROVIDED THAT WILL ENSURE THAT SEDIMENT, WATER, DEBRIS, ETC., DOES NOT COLLECT IN 90–DEGREE CORNERS.
2. PARALLEL ACCESSIBLE SPACES AND LOADING ZONES TO BE REVIEWED ON A CASE–BY–CASE BASIS.
3. FOR PARKING BAYS THAT ARE 8 FEET IN WIDTH OR GREATER, THE PAVEMENT MARKINGS SHALL BE SET AT ONE (1) FOOT LESS THAN THE STALL WIDTH.
4. GREATER SEPARATION FROM INTERVENING STREETS THAN THE DISTANCES PROVIDED IN THE MATRIX MAY BE REQUIRED AT THE COUNTY'S DISCRETION.
5. POSITIVE DRAINAGE SHALL BE PROVIDED EITHER BY INSTALLATION OF APPROPRIATE DRAINAGE STRUCTURES OR SLOPE PARKING AREA TO STREET FLOW LINE. SLOPING PARKING AREA TO STREET FLOW LINE ONLY PERMITTED IF ROAD GRADE IS GREATER THAN 2%.
6. IF A BIKE LANE IS REQUIRED ADJACENT TO PARALLEL PARKING, THE MINIMUM WIDTH OF BIKE LANE IS 6'.

MINIMUM DISTANCE TO NEXT INTERVENING STREET

PARALLEL PARKING BAY LOCATED ON	DRIVEWAY	LOCAL/ COLLECTOR	TH'FARE
LOCAL/COLLECTOR	20'	20'	20'
THOROUGHFARE	20'	20'	50'

Lancaster County
South Carolina

EFFECTIVE DATE 11/26/2016	REVISIONS:	PARALLEL PARKING STANDARDS	DETAIL No. R20 SHEET 3 OF 3

LANCASTER COUNTY

STANDARD STORM WATER DETAILS

SECTION 3

Lancaster County
South Carolina

November 28, 2016

GENERAL NOTES:

1. FOR CHANNELS CARRYING 500 ACRES OR MORE OF SURFACE RUNOFF, THE EASEMENT REQUIREMENT IS TO BE THE WIDTH OF THE CHANNEL FROM TOP OF BANK TO TOP OF BANK, PLUS (+) 10' ON EACH SIDE OF STREAM. (40' MINIMUM WIDTH)
2. FOR OPEN CHANNELS THE MINIMUM EASEMENT MUST CONTAIN THE WIDTH OF THE CHANNEL FROM TOP OF BANK TO TOP BANK.
3. WIDER EASEMENT WIDTHS MAY BE REQUIRED FOR PIPE DEPTHS GREATER THAN TEN FEET.
4. PIPE SYSTEMS AND OPEN CHANNELS ON PRIVATE PROPERTY SHALL BE PLACED IN A STORM DRAINAGE EASEMENT.

Easement Requirements for Open Storm Drainage Channels

Area in Acreage	Easement Requirement
0–45 ac.	20'
45–120 ac.	30'
120–500 ac.	40'
500 ac.+	see note

Easement Requirements for Storm Drain Pipe

Pipe Size	Easement Requirement
15"	15'
18"	15'
24"	15'
30"	20'
36"	20'
42"	25'
48"	25'
54"+	30'MIN (VARIES)

Lancaster County
South Carolina

EFFECTIVE DATE 11/26/2016	REVISIONS:	MINIMUM DRAINAGE EASEMENT REQUIREMENTS FOR STORM DRAIN PIPES AND OPEN CHANNELS	DETAIL No. SD1 SHEET 1 OF 1

NOTES:

1. A MINIMUM OF 24" FROM OUTSIDE DIAMETER OF PIPE TO SIDE OF TRENCH MUST BE ALLOWED FOR COMPACTION OF FILL MATERIAL. BACKFILLING OF TRENCHES SHALL BE ACCOMPLISHED IMMEDIATELY AFTER THE PIPE IS LAID. THE FILL AROUND THE PIPE SHALL BE PLACED IN LAYERS NOT TO EXCEED 6". UNDER NO CIRCUMSTANCES SHALL WATER BE PERMITTED TO RISE IN UNBACKFILLED TRENCHES AFTER THE PIPE HAS BEEN PLACED. COMPACTION REQUIREMENTS SHALL BE ATTAINED BY THE USE OF MECHANICAL TAMPS ONLY. EACH AND EVERY LAYER OF BACKFILL SHALL BE PLACED LOOSE AND THOROUGHLY COMPACTED INTO PLACE.

2. ALL BACKFILL MATERIAL SHALL HAVE AN IN PLACE COMPACTED DENSITY OF 95% OF STANDARD PROCTOR. THE FINAL 2' BELOW FINISHED GRADE SHALL BE 100%.

3. ALL TRENCHING OPERATIONS SHALL MEET OSHA STANDARDS.

4. BACKFILL MATERIAL BENEATH ROADWAY SHALL BE SELECT BACKFILL MATERIAL.

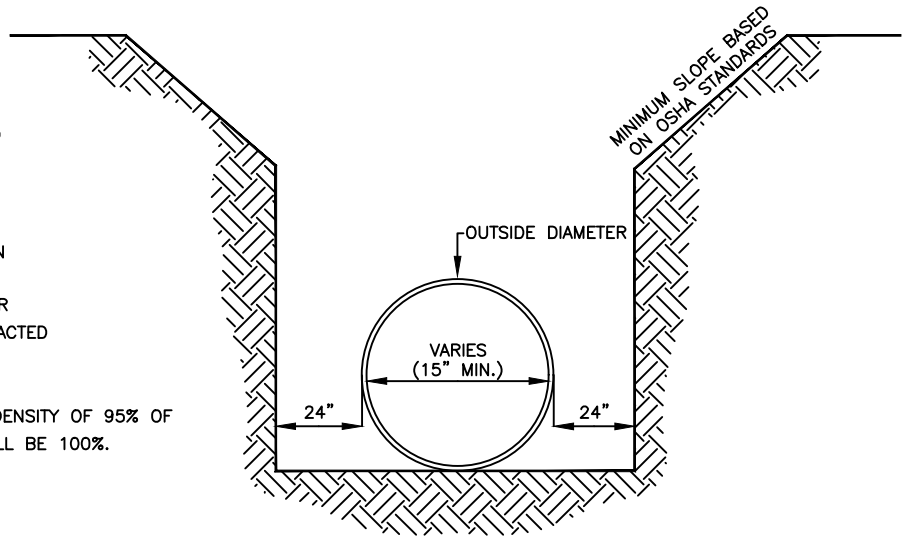

Lancaster County
South Carolina

EFFECTIVE DATE 11/26/2016	REVISIONS:	TRENCH DETAIL FOR STORM DRAIN PIPES	DETAIL No. SD2 SHEET 1 OF 1

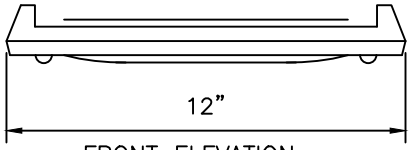

FRONT ELEVATION

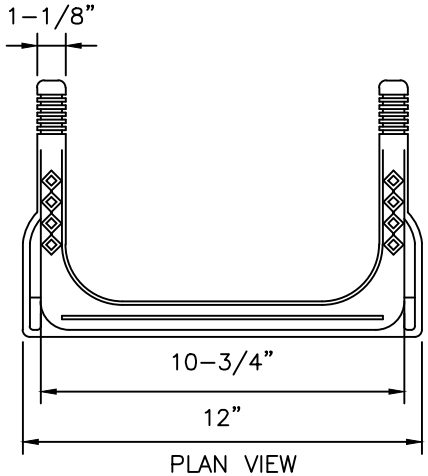

PLAN VIEW

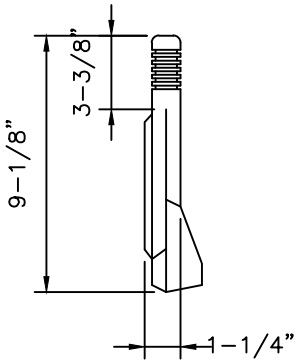

SIDE ELEVATION

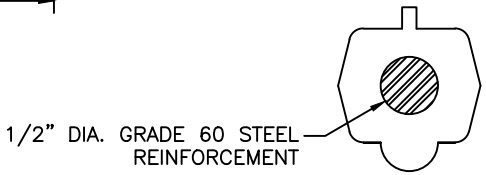

SECTION " A – A "

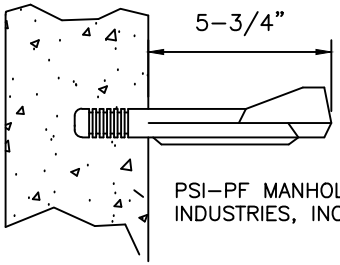

PSI-PF MANHOLE STEP BY M.A. INDUSTRIES, INC.

NOTE:
STEPS TO BE PLACED 16" OFF-CENTER VERTICALLY

Lancaster County
South Carolina

EFFECTIVE DATE 11/26/2016	REVISIONS:	STRUCTURE STEPS	DETAIL No. SD3 SHEET 1 OF 1

REGULAR TYPE (4'X4')

(3 FEET TO 20 FEET IN DEPTH)

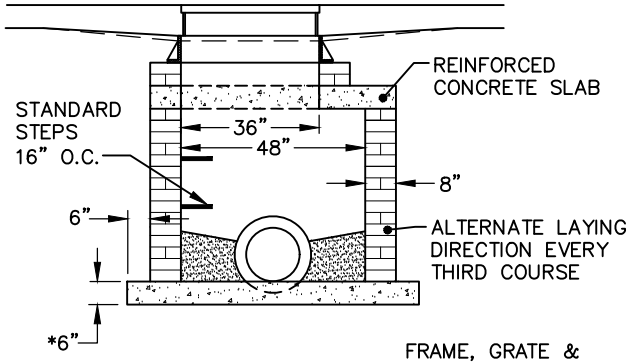

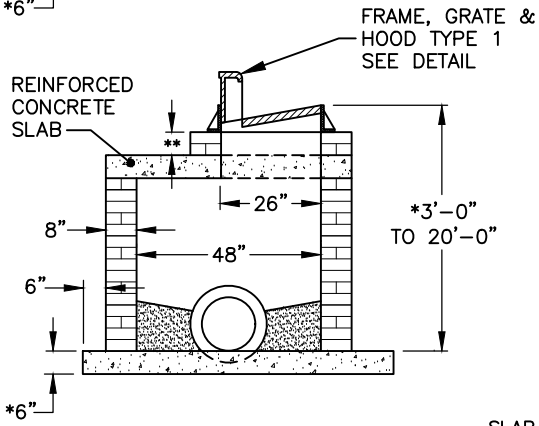

SLAB DETAIL

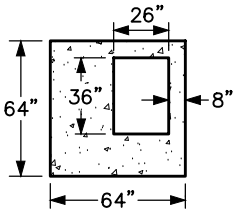

SLAB THICKNESS AND REINFORCEMENT FOR SOIL AND TRAFFIC LOADING BY AN ENGINEER

DEEP TYPE (5'X5')

(OVER 20 FEET IN DEPTH)

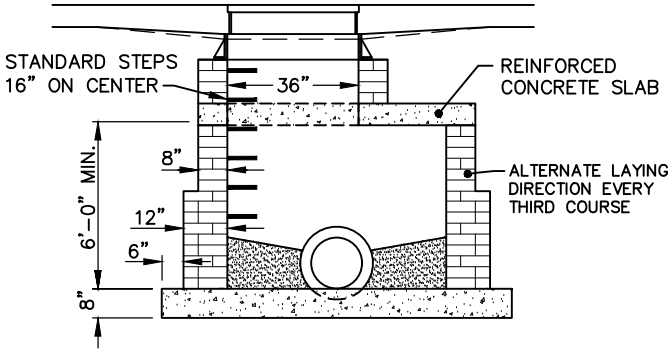

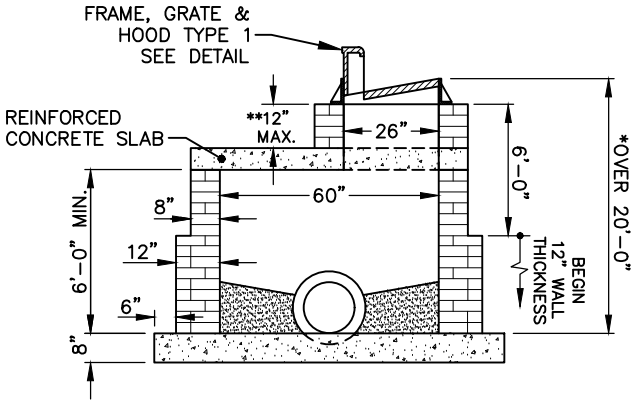

SLAB DETAIL

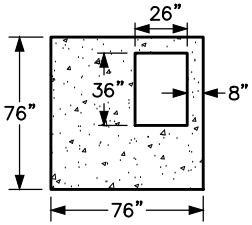

SLAB THICKNESS AND REINFORCEMENT FOR SOIL AND TRAFFIC LOADING BY AN ENGINEER

* OVER 8' IN DEPTH, 12" WALL THICKNESS TO 6' FROM TOP OF WALL, AND 8" BOTTOM SLAB SHALL BE USED.

** BRICK MAY BE USED TO ADJUST FRAME, GRATE & HOOD TO SURFACE ELEVATION A MAXIMUM OF 12 INCHES.

Lancaster County
South Carolina

EFFECTIVE DATE 11/26/2016	REVISIONS:	STANDARD CONCRETE BLOCK OR BRICK CATCH BASIN	DETAIL No. SD4 SHEET 1 OF 1

INTERMEDIATE TYPE (4'X4')

(3 FEET TO 20 FEET IN DEPTH)

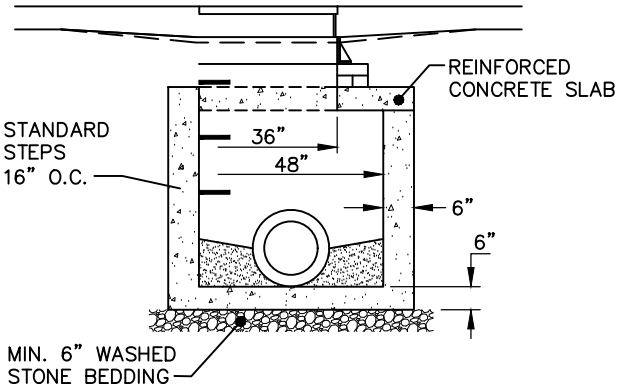

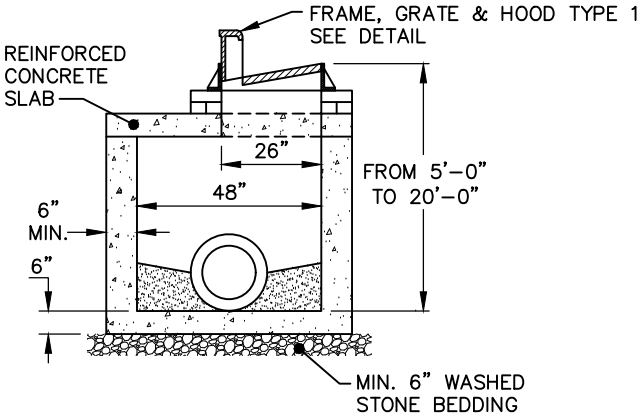

SLAB DETAIL

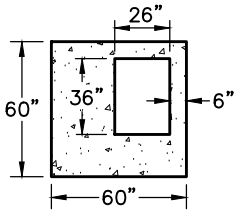

SLAB THICKNESS AND REINFORCEMENT FOR SOIL AND TRAFFIC LOADING BY AN ENGINEER

DEEP TYPE (5'X5')

(OVER 20 FEET IN DEPTH)

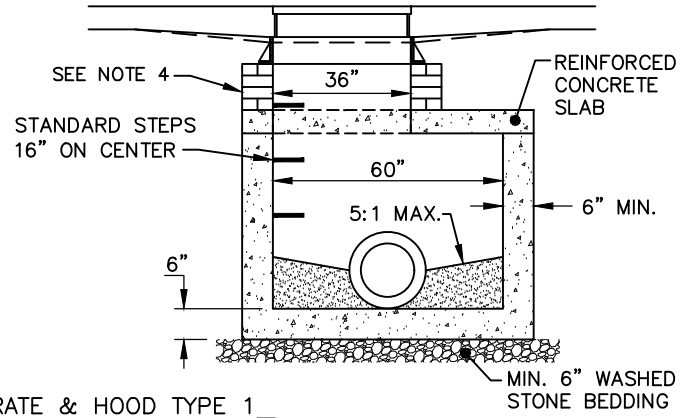

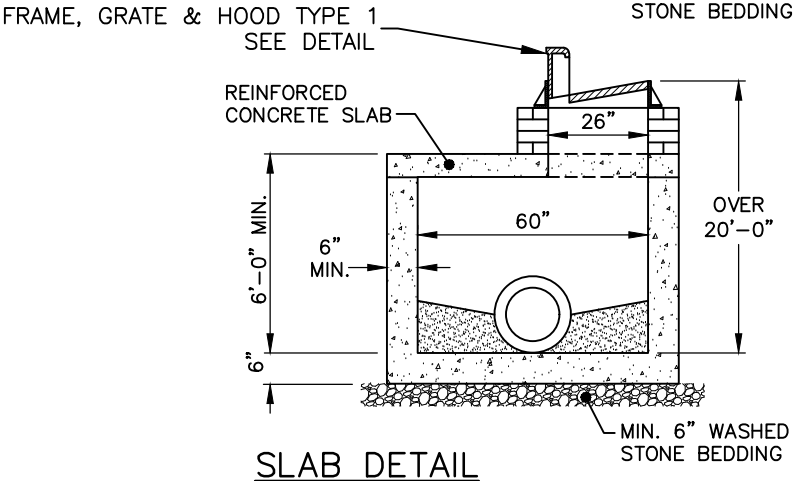

SLAB DETAIL

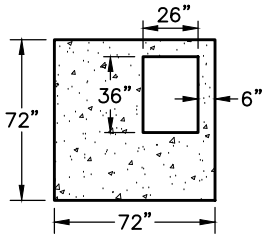

SLAB THICKNESS AND REINFORCEMENT FOR SOIL AND TRAFFIC LOADING BY AN ENGINEER

Lancaster County
South Carolina

EFFECTIVE DATE 11/26/2016	REVISIONS:	STANDARD PRECAST CONCRETE CATCH BASIN	DETAIL No. SD5 SHEET 1 OF 1

GENERAL NOTES:

1. CONSTRUCT TWO SINGLE BASINS WITH DOUBLE INTERIOR WALL.
2. ALL CONCRETE TO BE 3600 P.S.I COMPRESSIVE STRENGTH.
3. BASE SLAB SHALL BE MONOLITHIC.
4. PIPE SECTION D2 CONNECTING CATCH BASINS SHALL HAVE A MINIMUM DIAMETER SAME AS OF OUTLET PIPE D3.
5. ALL REINFORCING STEEL SHOWN ON DETAIL IS TO BE PROVIDED AS CONTINUOUS MEMBERS. (NO LAPS, USED AS A SINGLE CONTINUOUS BAR IN THE SLAB)
6. WEEP HOLES SHALL BE PLACED IN BACK WALL WITH FILTER FABRIC OR STONE ON BACK SIDE

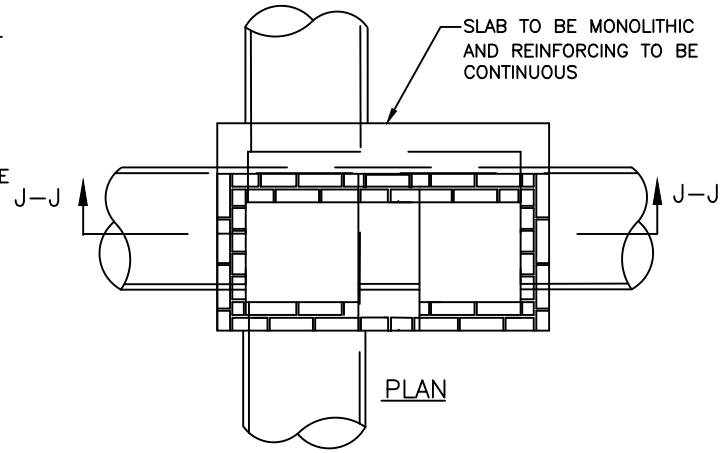

PLAN

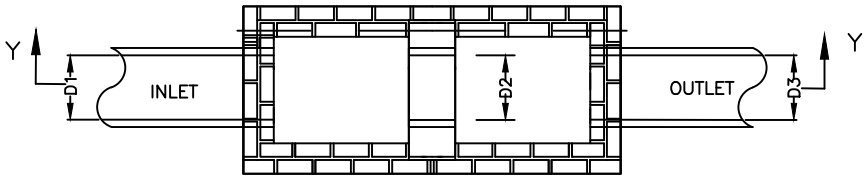

PLAN

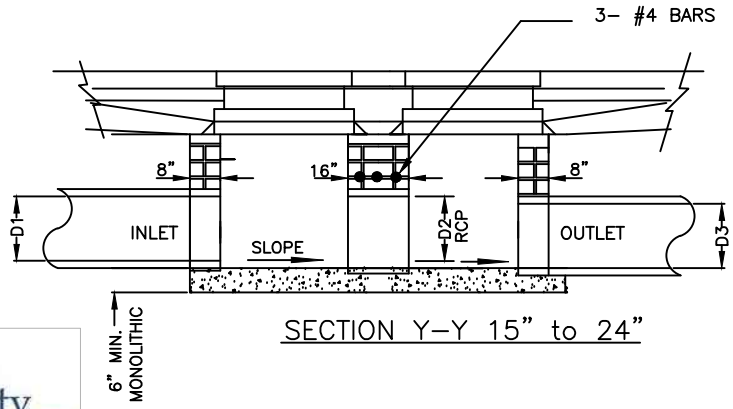

SECTION Y–Y 15" to 24"

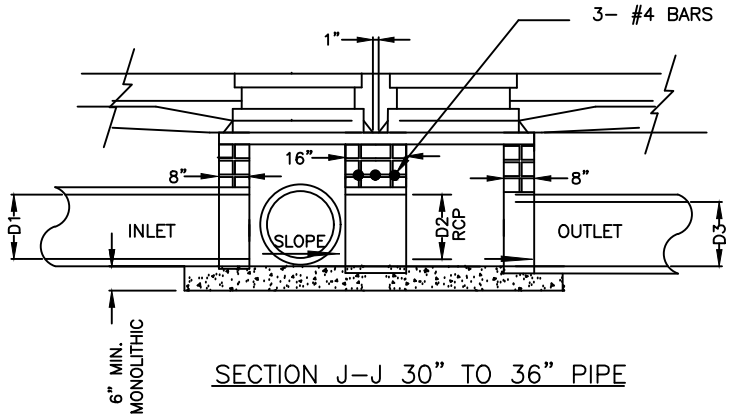

SECTION J–J 30" TO 36" PIPE

Lancaster County
South Carolina

EFFECTIVE DATE 11/26/2016	REVISIONS:	BRICK DOUBLE CATCH BASIN 15" THROUGH 36" PIPE	DETAIL No. SD6 SHEET 1 OF 1

DETAIL SHOWING TYPES OF GRATES TO BE USED ACCORDING TO WATER FLOW

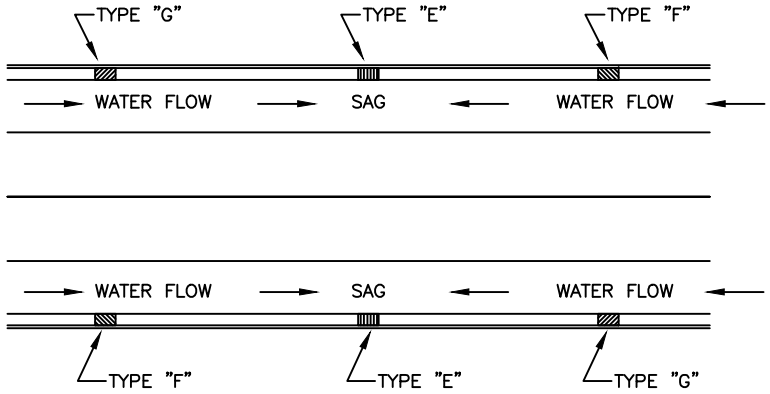

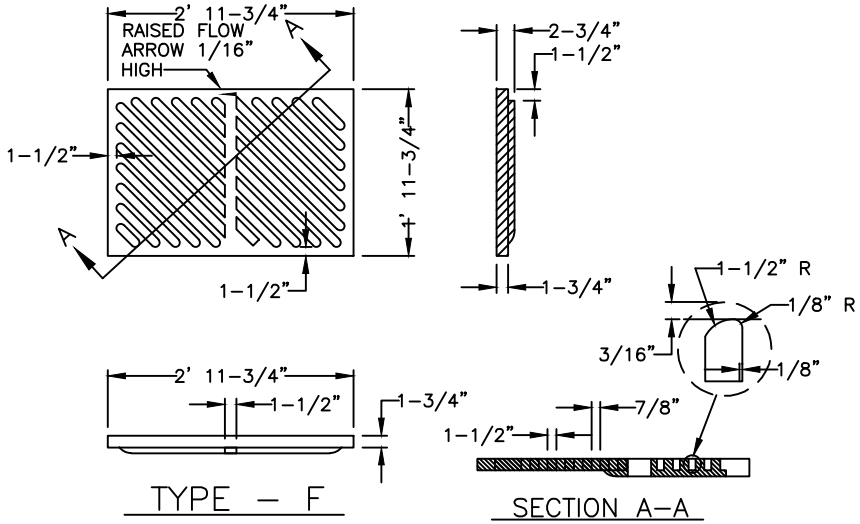

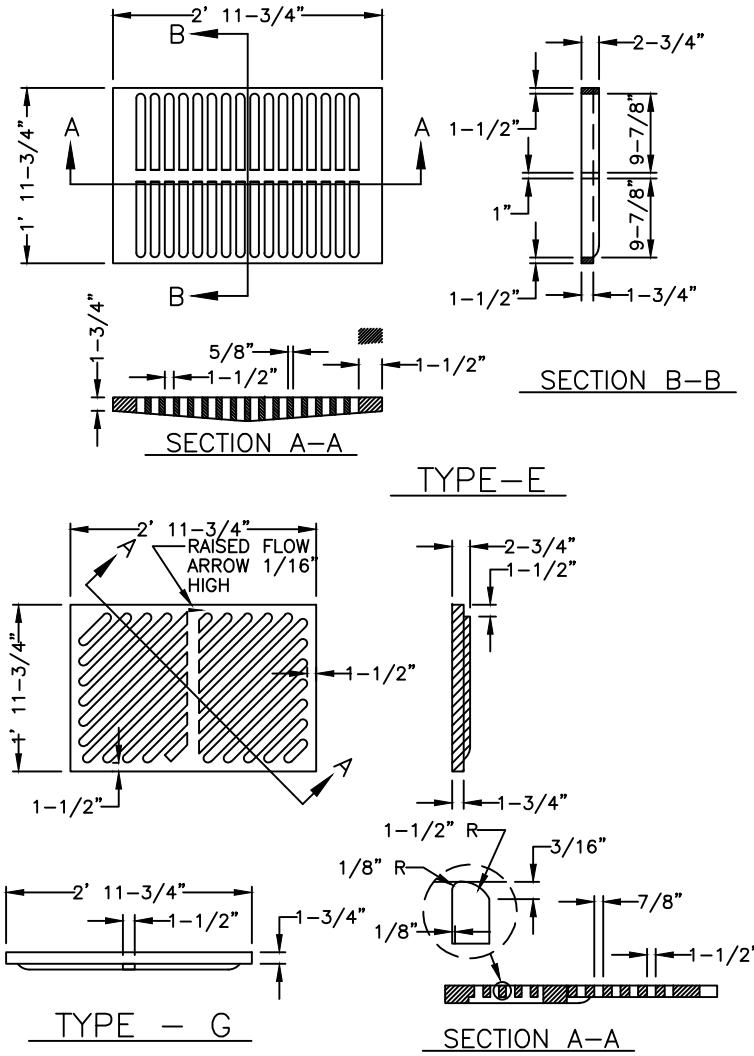

Lancaster County
South Carolina

EFFECTIVE DATE 11/26/2016	REVISIONS:	TYPE 1 CATCH BASIN GRATE TYPES	DETAIL No. SD7 SHEET 1 OF 1

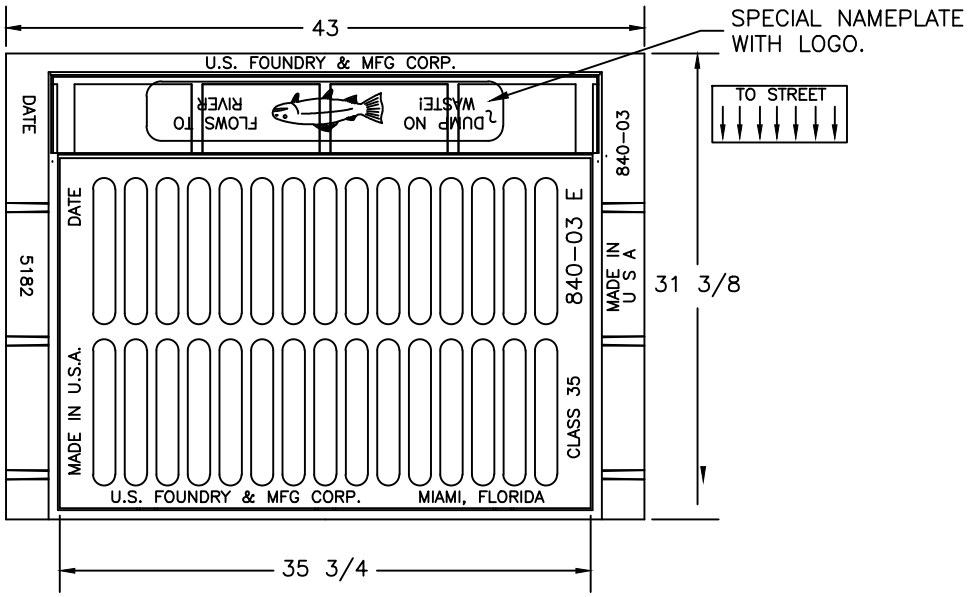

U.S. FOUNDRY
FRAME, GRATE, & HOOD
5181-6420, 6425, 6430

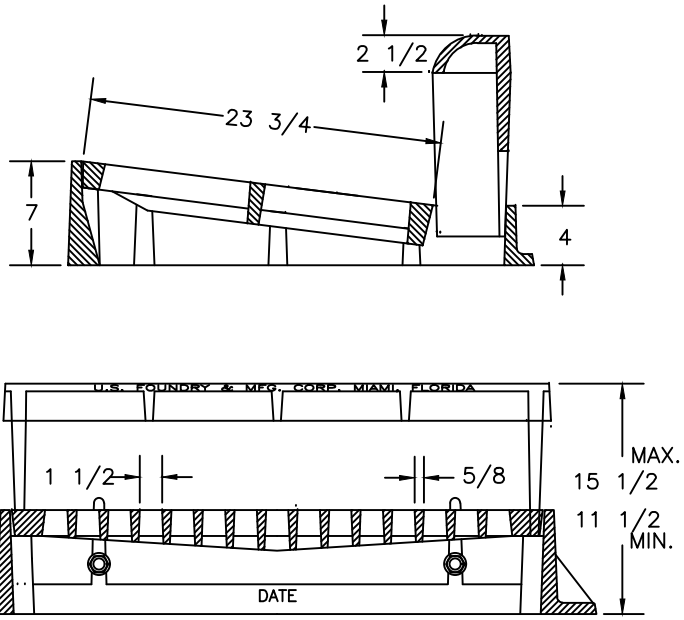

Lancaster County
South Carolina

EFFECTIVE DATE 11/26/2016	REVISIONS:	TYPE 1 CATCH BASIN HOOD & GRATE	DETAIL No. SD8 SHEET 1 OF 1

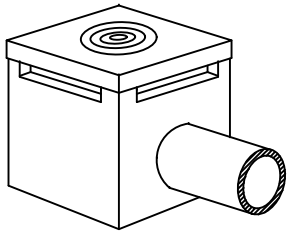

ISOMETRIC VIEW

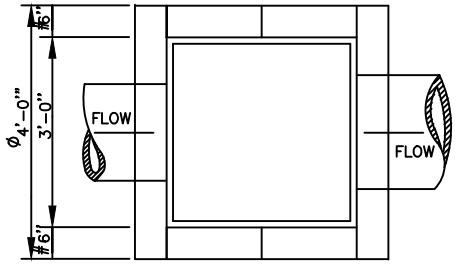

PLAN

{ 6" FOR CONCRETE
8" FOR BRICK

DETAIL OF COVER

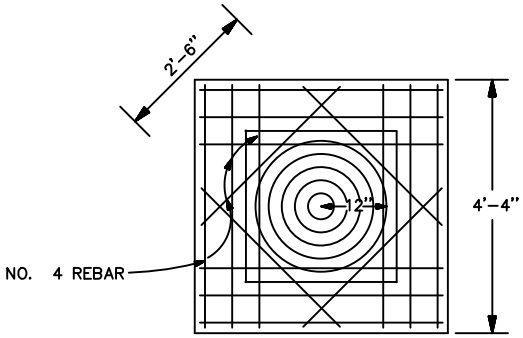

PLAN

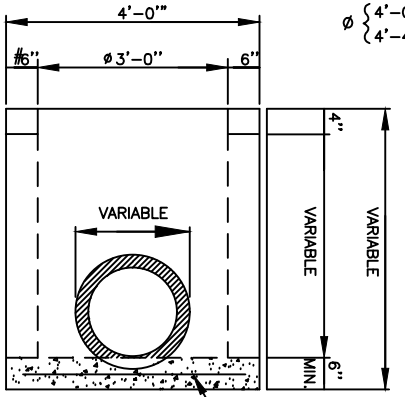

SIDE

Ø { 4'-0" FOR CONCRETE (MINIMUM)
4'-4" FOR BRICK (MINIMUM)

ALL PIPE SHALL BE CUT AS NECESSARY TO BE FLUSH WITH INSIDE WALL OF BOX.

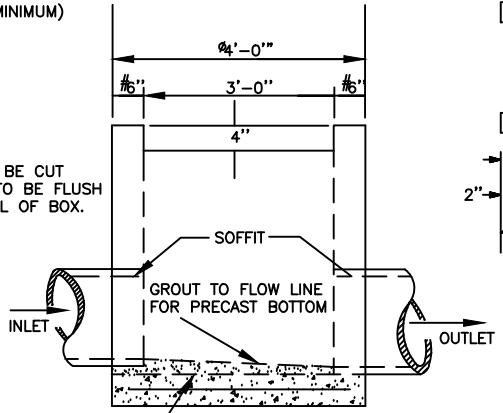

FRONT

NO. 4 REBAR – 12" O.C. WITH 1-1/2 " MINIMUM COVER ALL DIRECTIONS

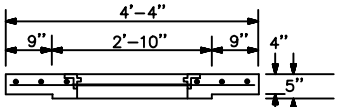

SIDE

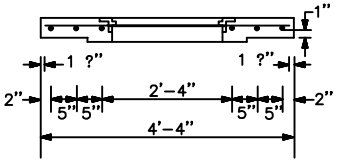

FRONT

SUMTER MACHINERY CO.
MANHOLE FRAME & COVER
(MF-513 & MC-513)
OR EQUAL OUTSIDE OF
TRAFFIC AREAS.

SUMTER MACHINERY CO.
MANHOLE FRAME & COVER
(MF-9 & MC-12)
OR EQUAL INSIDE OF
TRAFFIC AREAS.

Lancaster County
South Carolina

EFFECTIVE DATE 11/26/2016	REVISIONS:	TYPE 9 CATCH BASIN	DETAIL No. SD9 SHEET 1 OF 2

NOTES:

1. FOR IN PLACE CONSTRUCTION OF THE CATCH BASINS, THE WALLS MAY BE EITHER BRICK MASONRY OR CLASS 3000 CONCRETE MAY BE USED. CONCRETE WALLS ARE TO BE 6 IN. THICK WITH A REINFORCING STEEL AREA OF 0.20 SQ. INCH PER FT. BRICK WALLS ARE TO BE 8 IN. THICK. CONCRETE BRICK AND SIMILAR SOLID UNITS SHALL CONFORM TO THE REQUIREMENTS OF ASTM C 55, GRADE S–II.
2. THE BOTTOM SLAB OF THE BOX SHALL BE A MINIMUM OF 6 IN. THICK CLASS 3000 CONCRETE WITH A REINFORCING STEEL AREA OF 0.20 SQ. INCH PER FT. WIRE MESH MAY BE USED IN LIEU OF STEEL BARS PROVIDED A MINIMUM OF 0.20 SQ. INCH PER FT. IS MET.
3. FOR CONSTRUCTION OF THE CATCH BASIN TOP CLASS 4000P OR BETTER CONCRETE SHALL BE USED WITH REINFORCING STEEL AS SHOWN.
4. MORTAR SHALL BE TYPE S OR M.
5. REINFORCING STEEL SHALL BE ASTM A–706, LOW–ALLOY DEFORMED BARS FOR CONCRETE REINFORCEMENT, GRADE 60. WIRE MESH SHALL CONFORM TO AASHTO M 55, AND M 221.
6. IF STRUCTURE DEPTH EXCEEDS 3'–6'', STEPS ARE TO BE PLACED ON WALL. SEE STEP DETAIL ON SHEET C.6.3.
7. THE NUMBER OF BOX OPENINGS SHALL BE CONSTRUCTED, AS DIRECTED BY THE ENGINEER, TO FIT FIELD CONDITIONS.
8. WHEN CATCH BASIN IS USED IN CONJUNCTION WITH A VALLEY GUTTER SECTION THE FACE OF THE BASIN SHALL
   BE A MINIMUM OF 3' FROM THE GUTTER AND THE SLOPE OF THE FLUME IN FRONT OF THE BASIN SHALL BE A MAXIMUM SLOPE OF 12:1. THE COST OF SLOPING THE VALLEY IN FRONT OF THE BASIN SHALL BE INCLUDED IN THE PRICE BID FOR UNCLASSIFIED EXCAVATION.
9. THE SOFFIT (INSIDE TOP OF PIPE) OF THE OUTLET PIPE SHOULD BE NO HIGHER THAN THE FLOW–LINE OF THE INLET PIPE, UNLESS A PRECAST STRUCTURE IS SPECIFIED.
10. 10. LIFT HOLES AND/OR DEVICES MAY BE PLACED AS NECESSARY. ALL LIFT HOLES SHALL BE GROUTED SHUT PRIOR TO COMPLETION OF INSTALLATION. ALL LIFTING METHODS MUST MEET OSHA REGULATIONS.

Lancaster County
South Carolina

EFFECTIVE DATE 11/26/2016	REVISIONS:	TYPE 9 CATCH BASIN	DETAIL No. SD9 SHEET 2 OF 2

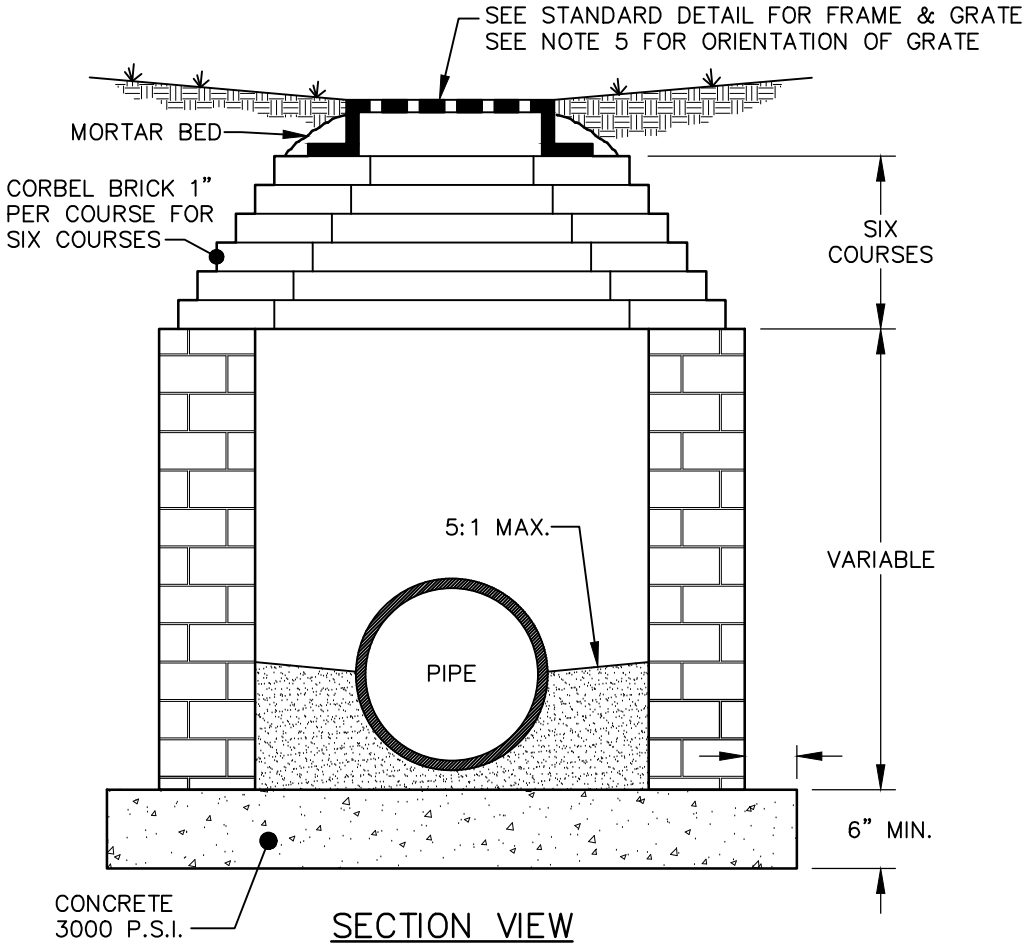

SECTION VIEW

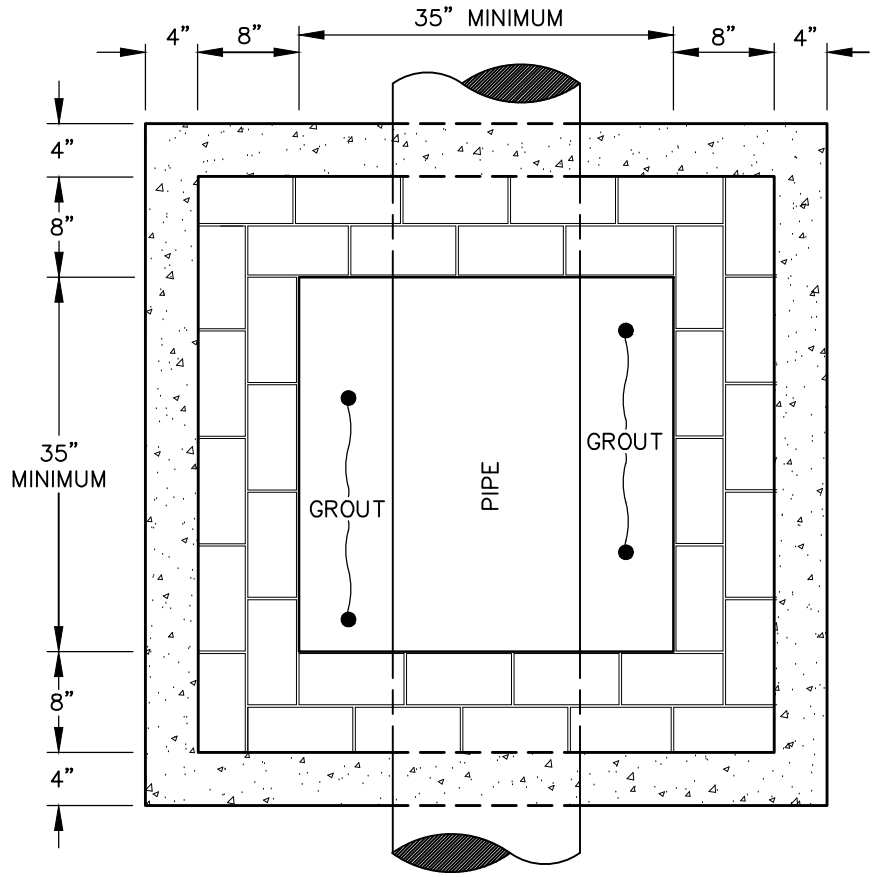

PLAN VIEW

NOTES:
1. EITHER SOLID BRICK OR SOLID BLOCK MAY BE USED.
2. FOR 24 INCH R.C.P. AND LARGER USE PIPE DIAMETER PLUS 12 INCHES FOR MINIMUM INSIDE DIMENSION.
3. GRATED INLETS SHALL NOT BE USED WITHIN TRAVEL AREAS.
4. STANDARD STEPS REQUIRED @ 16 INCHES O.C. WHERE DEPTH EXCEEDS 3 FEET.
5. WHERE STEPS ARE REQUIRED, USE OF PRECAST CONCRETE SLAB SHALL BE USED AS TOP AND GRATE POSITIONED OVER STEPS.
6. YARD INLETS DEEPER THAN 10 FEET SHALL REQUIRE DOUBLE WALLS.

Lancaster County
South Carolina

EFFECTIVE DATE 11/26/2016	REVISIONS:	STANDARD BRICK DROP INLET	DETAIL No. SD10 SHEET 1 OF 1

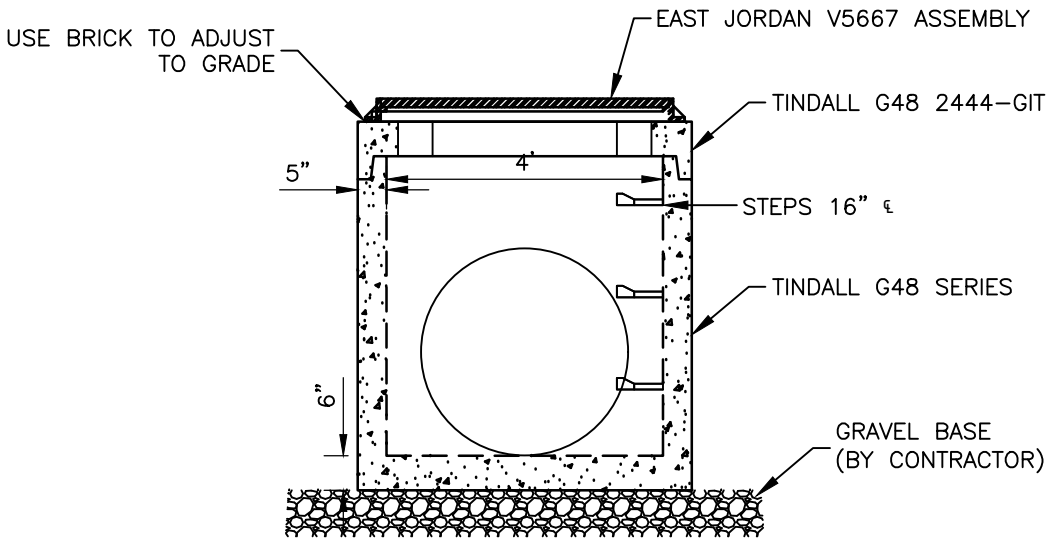

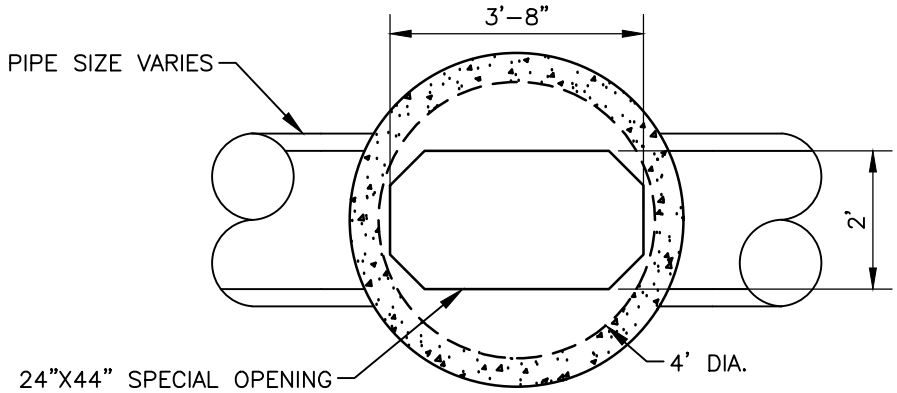

Lancaster County
South Carolina

EFFECTIVE DATE 11/26/2016	REVISIONS:	STANDARD PRECAST DROP INLET	DETAIL No. SD11 SHEET 1 OF 1

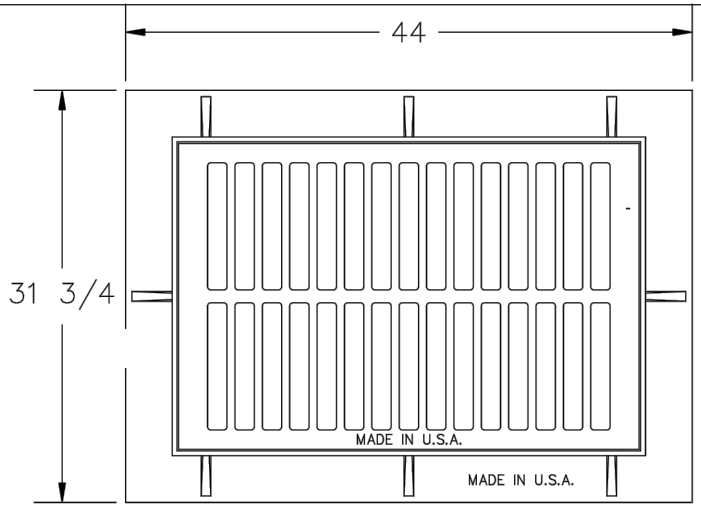

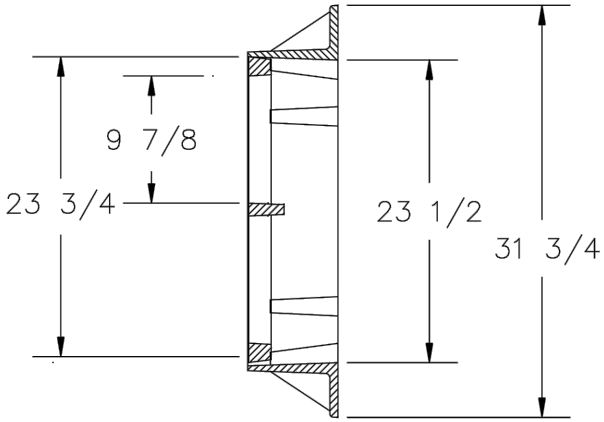

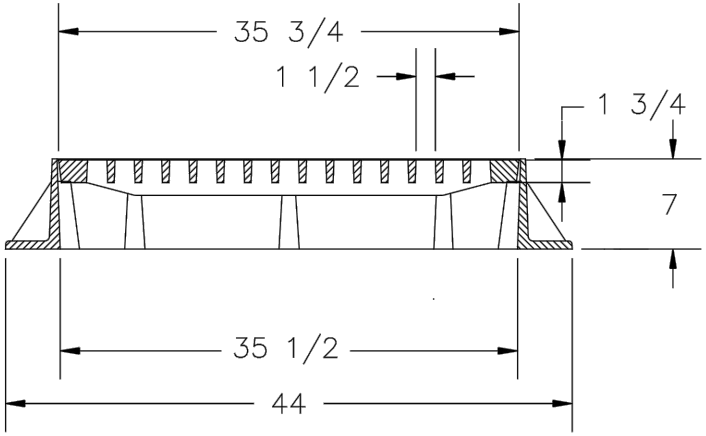

NOTES:

1– MATERIAL; ASTM–A48 CLASS 35B GRAY IRON
2– FRAME WT: 240 LBS. APP.
3– GRATE WT: 170 LBS. APP.

U.S. FOUNDRY & MFG. CORP. MIAMI, FLORIDA	
USF 4137 FRAME AND 6237 GRATE	
DWN. BY: A.M.	DATE: 04/10/91
CHK. BY:	DWG. NO: A2495 2

Lancaster County South Carolina

EFFECTIVE DATE 11/26/2016	REVISIONS:	FRAME & GRATE FOR DROP INLETS	DETAIL No. SD12 SHEET 1 OF 1

STANDARD TYPE
(UP TO 20 FEET IN DEPTH)

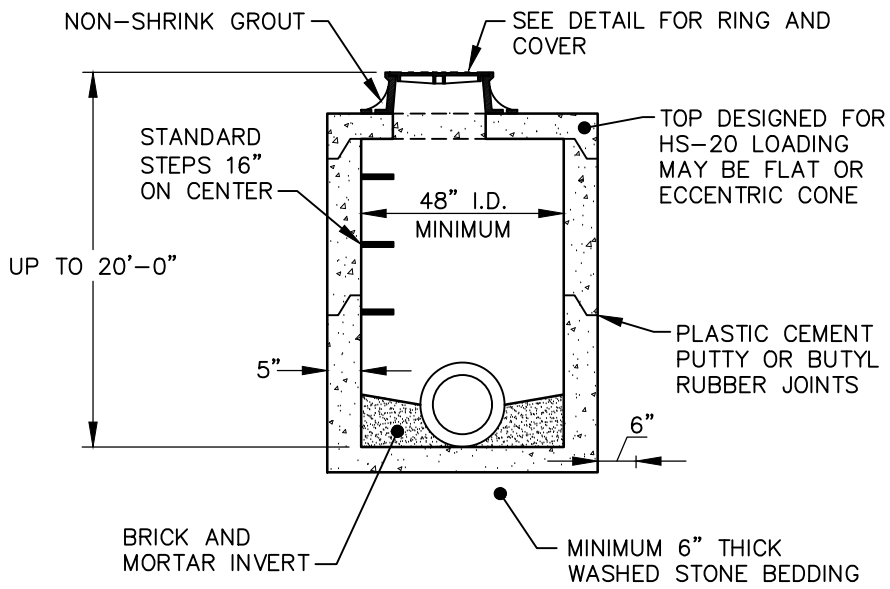

FLAT TOP DETAIL

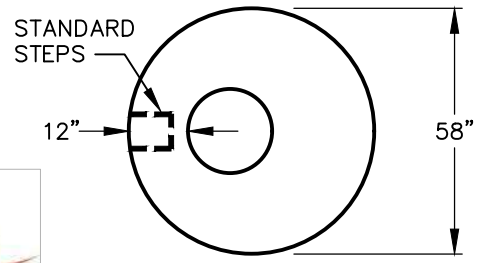

DEEP TYPE
(OVER 20 FEET IN DEPTH)

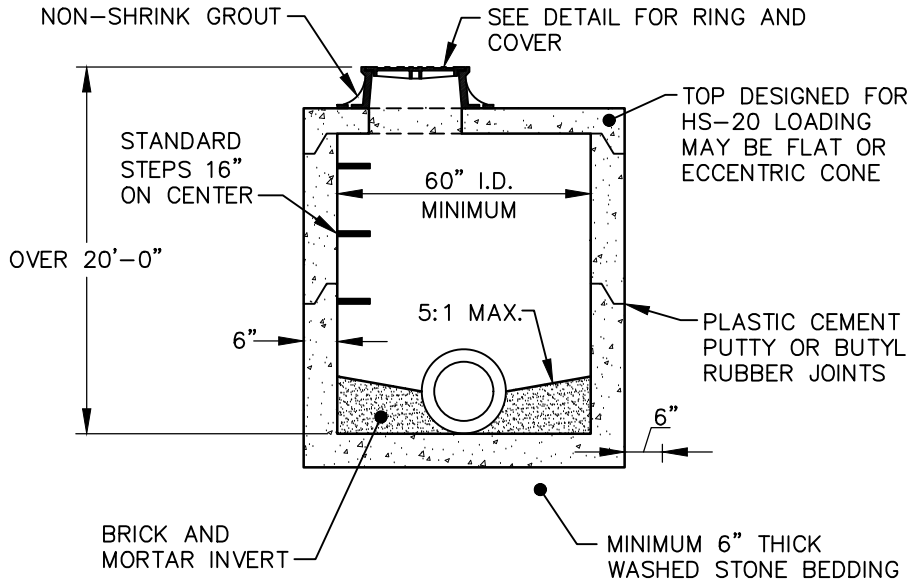

FLAT TOP DETAIL

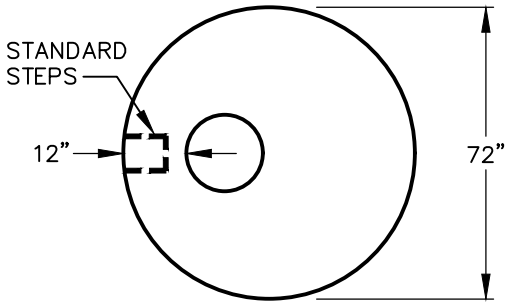

Lancaster County
South Carolina

EFFECTIVE DATE 11/26/2016	REVISIONS:	STANDARD PRECAST CONCRETE JUNCTION BOX	DETAIL No. SD13 SHEET 1 OF 1

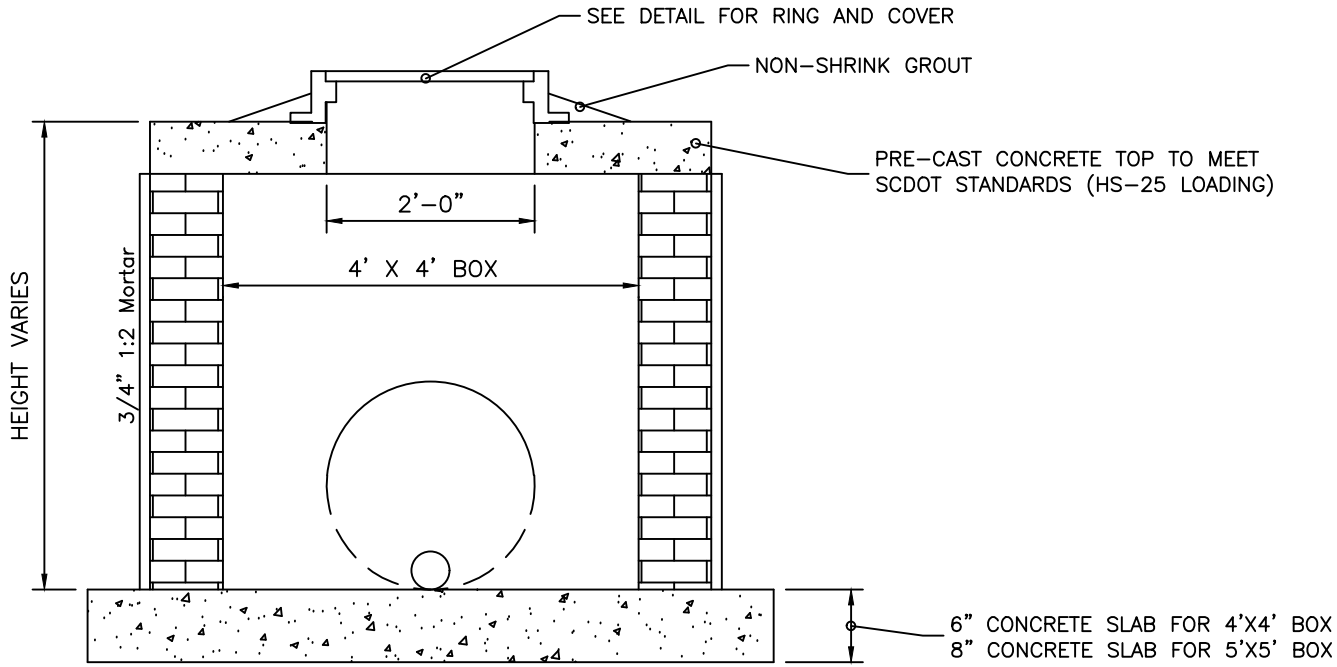

TYPICAL SECTION

GENERAL NOTES:

1. MORTAR JOINTS 1/2" +/– 1/8" THICK.
2. ALL CONCRETE TO BE 3600 P.S.I COMPRESSIVE STRENGTH.
3. STRUCTURES SHALL CONFORM TO SC DOT SPECIFICATIONS.
4. CONCRETE BRICK MAY BE USED IN LIEU OF HARD COMMON CLAY BRICK.
5. JUMBO BRICK WILL BE PERMITTED.
6. FOR 8'–0" IN HEIGHT OR LESS USE 8" WALL. OVER 8'–0" IN HEIGHT USE 12" WALL TO 6'–0" FROM TOP OF WALL, AND 8" WALL FOR THE REMAINING 6'–0".
7. ALL PIPE IN STORM DRAIN STRUCTURES SHALL BE STRUCK EVEN WITH THE INSIDE WALL, GROUTED AND BRUSHED SMOOTH.
8. WEEP HOLE(S) SHALL BE PLACED IN BACK WALL. A STONE DRAIN CONSISTING OF 1 (ONE) CUBIC FOOT OF NUMBER 78M STONE CONTAINED IN A BAG OF POROUS FABRIC SHALL BE PLACED AT WEEP HOLE.
9. BRICK SHALL BE BONDED WITH FULL HEADERS EVERY 3 COURSES.

Lancaster County
South Carolina

EFFECTIVE DATE 11/26/2016	REVISIONS:	STANDARD BRICK JUNCTION BOX	DETAIL No. SD14 SHEET 1 OF 1

THE INFORMATION CONTAINED IN THE DRAWING IS THE SOLE PROPERTY OF U.S. FOUNDRY & MANUFACTURING CORP. ANY REPRODUCTION IN PART OR AS A WHOLE WITHOUT THE WRITTEN PERMISSION OF U.S. FOUNDRY & MANUFACTURING CORP. IS PROHIBITED. U.S. FOUNDRY & MANUFACTURING CORP. RESERVES THE RIGHT TO MAKE MODIFICATIONS TO DESIGN WITHOUT PRIOR NOTICE. DRAWING IS UNCONTROLLED WHEN PRINTED. WEIGHTS AND DIMENSIONS ARE PROVIDED FOR REFERENCE ONLY. © 2016 US FOUNDRY AN EAGLE MANUFACTURING COMPANY

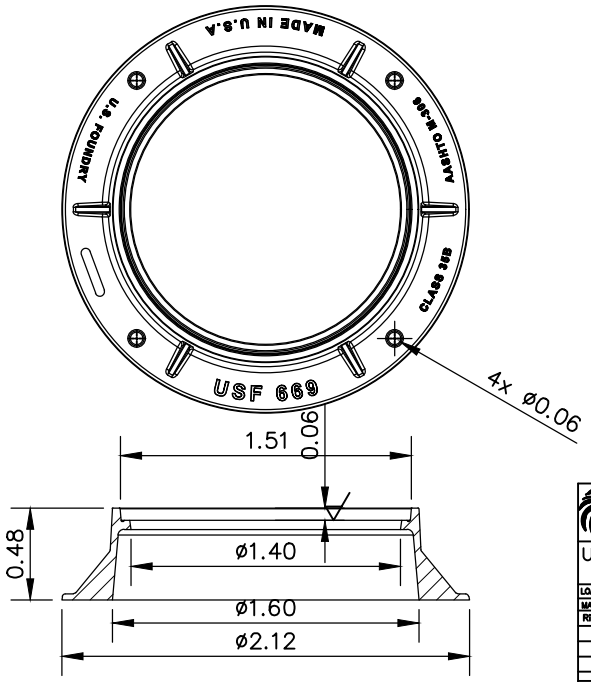

US FOUNDRY
AN EAGLE MANUFACTURING COMPANY

8351 NW 93rd Street
Medley, FL. 33166-2025
ph: 1-800-432-9709
fax: 305-887-9429
www.usfoundry.com
© 2016 All Rights Reserved

USF 669 Ring

LOAD CLASSIFICATION:	Heavy Duty
MATERIAL:	ASTM-A48 GRAY IRON CLASS35B
Ring No:	8020190
REF:	
DATE:	11/13/2006
DWN. BY:	NR/ULS
REV: 2	DATE: 1/22/2015 REV BY: ULS QUOTE#:

THE INFORMATION CONTAINED IN THE DRAWING IS THE SOLE PROPERTY OF U.S. FOUNDRY & MANUFACTURING CORP. ANY REPRODUCTION IN PART OR AS A WHOLE WITHOUT THE WRITTEN PERMISSION OF U.S. FOUNDRY & MANUFACTURING CORP. IS PROHIBITED. U.S. FOUNDRY & MANUFACTURING CORP. RESERVES THE RIGHT TO MAKE MODIFICATIONS TO DESIGN WITHOUT PRIOR NOTICE. DRAWING IS UNCONTROLLED WHEN PRINTED. WEIGHTS AND DIMENSIONS ARE PROVIDED FOR REFERENCE ONLY. © 2016 US FOUNDRY AN EAGLE MANUFACTURING COMPANY

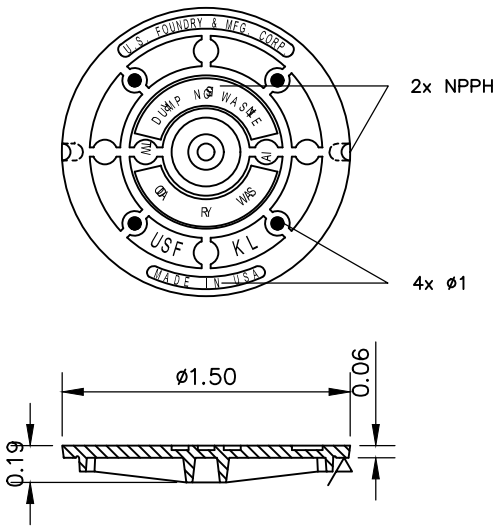

US FOUNDRY
AN EAGLE MANUFACTURING COMPANY

8351 NW 93rd Street
Medley, FL. 33166-2025
ph: 1-800-432-9709
fax: 305-887-9429
www.usfoundry.com
© 2016 All Rights Reserved

USF KL Cover

LOAD CLASSIFICATION:	Heavy Duty
MATERIAL:	ASTM-A48 GRAY IRON CLASS35B
Ring No:	
REF:	
DATE:	4/20/2016
DWN. BY:	OD/ULS
REV: 0	DATE: REV BY: QUOTE#:

Lancaster County
South Carolina

EFFECTIVE DATE 11/26/2016	REVISIONS:	RING AND COVER FOR STORM SYSTEM	DETAIL No. SD15 SHEET 1 OF 1

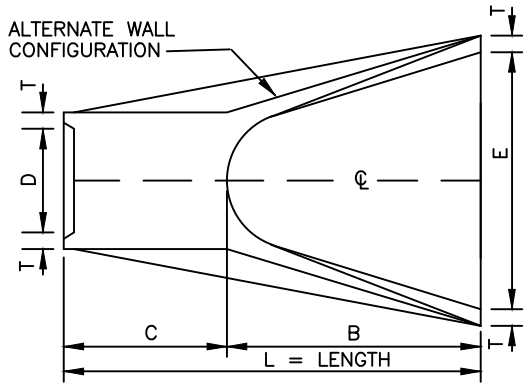

PLAN

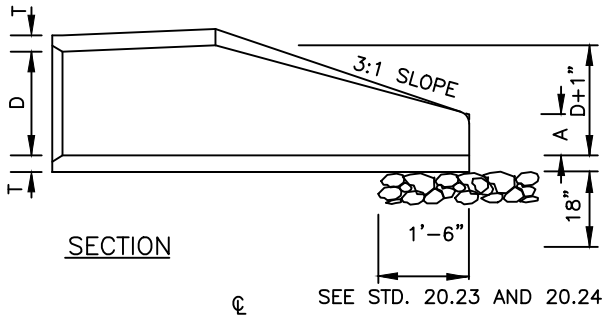

SECTION

SEE STD. 20.23 AND 20.24

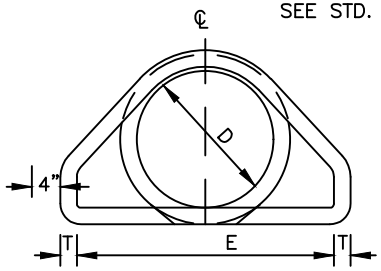

END VIEW

TABLE OF DIMENSIONS							
D	T	A	B	C	E	L	WT.
12"	2-1/4"	4"	2'-0"	4'-1"	2'-0"	6'-1"	730
15"	2-1/4"	6"	2'-3"	3'-10"	2'-0"	6'-1"	730
18"	2-1/2"	9"	2'-3"	3'-10"	3'-0"	6'-1"	1190
24"	3"	10"	3'-8"	2'-6"	4'-0"	6'-2"	1770
30"	3-1/2"	1'-0"	4'-6"	1'-8"	5'-0"	6'-2"	2380
36"	4"	1'-3"	5'-3"	2'-11"	6'-0"	8'-2"	5320
42"	4-1/2"	1'-9"	5'-3"	2'-11"	6'-6"	8'-2"	5920
48"	5"	2'-0"	6'-0"	2'-2"	7'-0"	8'-2"	7470
54"	5-1/2"	2'-3"	5'-6"	2'-10"	7'-6"	8'-4"	8810
60"	6"	2'-6"	5'-0"	3'-3"	8'-0"	8'-3"	11180
66"	6-1/2"	3'-0"	6'-0"	2'-3"	8'-6"	8'-3"	12530
72"	7"	3'-0"	6'-6"	1'-9"	9'-0"	8'-3"	13980

GENERAL NOTES:

1. REINFORCEMENT SHALL CONFORM TO THE REQUIREMENTS OF REINFORCED CONCRETE PIPE OF LIKE DIAMETER PER AASHTO M170, TABLE 2, WALL B.
2. ALL CONCRETE TO BE 3600 P.S.I COMPRESSIVE STRENGTH.
3. PROVIDE TONGUE OR SPIGOT JOINT AT INLET END SECTION.
4. PROVIDE GROOVE OR BELL JOINT AT OUTLET END SECTION.
5. THE DIMENSIONS FOR END SECTIONS SHALL SUBSTANTIALLY AGREE WITH THE TABLE. MINOR VARIATIONS WILL BE PERMITTED BASED ON THE MANUFACTURER'S STANDARD FORMS AND TEMPLATES.
6. NOT TO BE USED IN SCDOT MAINTAINED RIGHT OF WAY.

Lancaster County
South Carolina

EFFECTIVE DATE 11/26/2016	REVISIONS:	FLARED END SECTION 12" THROUGH 72" PIPE	DETAIL No. SD16 SHEET 1 OF 1

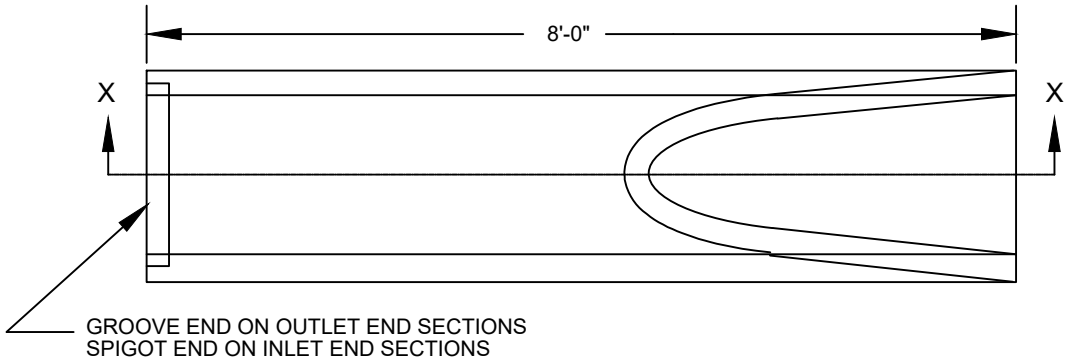

PLAN

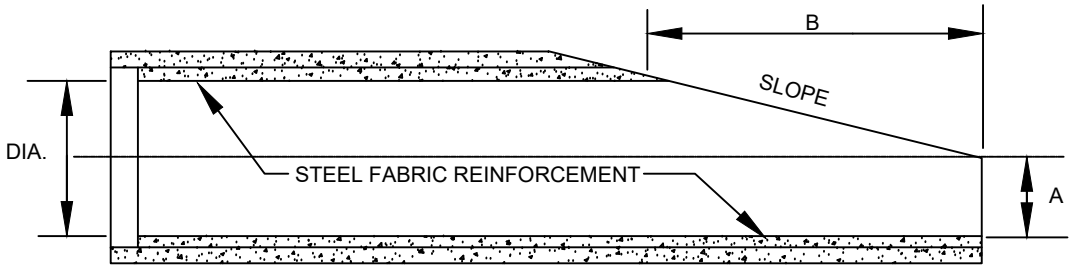

SECTION X-X

END SECTION DIMENSIONS			
DIA.	A	B	SLOPE
15"	0'-6"	3'-0"	4:1
18"	0'-9"	3'-0"	4:1
24"	0'-10"	4'-6"	4:1
30"	1'-0"	4'-8"	3:1
36"	1'-3"	5'-3"	3:1
42"	1'-8"	5'-6"	3:1
48"	2'-0"	6'-0"	3:1

NOTE:

1. BEVELED END SECTIONS WILL BE MANUFACTURED IN ACCORDANCE WITH SECTION 714 OF SCDOT STANDARD SPECIFICATIONS FOR HIGHWAY CONSTRUCTION. THESE SPECIAL PIPE SECTIONS WILL BE MADE DURING THE MANUFACTURE OF OTHER STATE APPROVED REINFORCED CONCRETE PIPE.

Lancaster County
South Carolina

EFFECTIVE DATE 11/26/2016	REVISIONS:	BEVELED END SECTION	DETAIL No. SD17 SHEET 1 OF 1